APPENDIX 3.4-F

2008 Pump Tests:
Results and Analysis

This page intentionally left blank

Knight Piésold
CONSULTING

Powertech (USA) Inc.
Dewey-Burdock Project
2008 Pumping Tests:
Results and Analysis

November 2008

Prepared for

Powertech (USA) Inc.
5575 DTC Parkway, Suite 140
Greenwood Village, CO 80111
Telephone: (303) 790-7528
Telefax: (303) 790-3885

Prepared by

Knight Piésold and Co.
1580 Lincoln Street, Suite 1000
Denver, Colorado 80203
Telephone: (303) 629-8788
Telefax: (303) 629-8789

Project DV102.00279.01

Rev. No.	Date	Description	Knight Piésold	Client
0	November 2008	Final to Client	Paul Bergstrom	Powertech (USA)

This page intentionally left blank

Knight Piésold
CONSULTING

Powertech (USA) Inc.
Dewey-Burdock Project
2008 Pumping Tests:
Results and Analysis

Table of Contents

List of Tables iv
List of Figures v
List of Drawings vii
List of Appendices viii
1. Introduction 1-1
1.1. Objectives 1-1
1.2. Report Organization 1-2
1.3. Limitations and Disclaimer 1-3
2. Site Characterization 2-1
2.1. Stratigraphy 2-1
2.1.1 Overlying Unit: Skull Creek Formation Shales 2-1
2.1.2 Inyan Kara Group: Fall River Formation and Lakota Formation Sandstones 2-2
2.1.3 Underlying Units: Morrison Formation Shale and Unkpapa/Sundance Formation Sandstone 2-3
2.2. Hydrogeologic Conditions: Potentiometric Surface and Hydraulic Gradient 2-3
2.3. Summary of Previous Aquifer Testing Results 2-5
2.3.1 Dewey Project Area 2-5
2.3.2 Burdock Project Area 2-6
3. 2008 Pumping Tests: Design and Procedures 3-1
3.1. Well Installation, Completion and Mechanical Integrity Testing 3-1
3.2. Pumping Test Equipment and Facilities 3-1
3.3. Background Monitoring and Water Level Corrections 3-2
3.4. Test Procedures, Data Collection, Data Processing 3-4
4. Dewey Project Area Pumping test 4-1

Table of Contents *(Continued)*

4.1. Test Layout and Initial Potentiometric Surface Measurements 4-1
4.2. Pumping Rate and Duration 4-2
4.3. Responses at Pumping and Observation Wells 4-2
4.4. Determination of Aquifer Parameters 4-3
4.4.1 Theis Drawdown and Recovery Analysis 4-3
4.4.2 Theis-Cooper-Jacob Straight-line Analysis 4-4
4.4.3 Distance-Drawdown Analysis 4-5
4.4.4 Summary of Dewey Test – Lower Fall River Formation Aquifer Parameters 4-5
4.5. Underlying Lakota Aquifer Test Results 4-6
4.6. Underlying Unkpapa Aquifer Test Results 4-6
5. Burdock Project Area Pumping test 5-1
5.1. Test Layout and Initial Potentiometric Surface Measurements 5-1
5.2. Pumping Rate and Duration 5-2
5.3. Responses at Pumping and Observation Wells 5-2
5.4. Determination of Aquifer Parameters 5-3
5.4.1 Theis Drawdown Analysis 5-3
5.4.2 Hantush-Jacob Drawdown Analysis 5-4
5.4.3 Theis-Cooper-Jacob Straight-line Analysis 5-5
5.4.4 Distance-Drawdown Analysis 5-5
5.4.5 Summary of Burdock Test – Lower Lakota (Chilson) Formation Aquifer Parameters 5-6
5.5. Overlying Fall River Aquifer Test Results 5-7
5.6. Underlying Unkpapa Aquifer Test Results 5-8
6. Laboratory Core Data 6-1
6.1. Background 6-1
6.2. Conversion from Intrinsic Permeability to Hydraulic Conductivity 6-1
6.3. Interpretations of the Laboratory Core Data 6-2
6.4. Conclusions 6-3
7. Summary and Conclusions 7-1

Table of Contents *(Continued)*

7.1. Burdock Project Area 7-1
7.1.1 Summary 7-1
7.1.2 Conclusions 7-2
7.2. Dewey Project Area 7-4
7.2.1 Summary 7-4
7.2.2 Conclusions 7-4
8. Certification 8-1
9. References 9-1

List of Tables

Table	Title
4.1	Dewey Pump Test Completion Information
4.2	Dewey Pump Test Drawdown and Response Summary
4.3	Summary of Aquifer Hydraulic Characteristics for the Dewey Pumping Test
5.1	Burdock Pump Test Completion Information
5.2	Burdock Pump Test, Drawdown and Response Summary
5.3	Summary of Aquifer Hydraulic Characteristics for the Burdock Pumping Test
6.1	Laboratory Core Analyses for Powertech USA, Inc. at Dewey-Burdock Site

List of Figures

Figure	Title
1.1	1979-1982 and 2008 Pumping Test Locations
2.1	Site Stratigraphy
2.2	Site Surface Geology
2.3	Potentiometric Surface, Fall River Aquifer, 2008
2.4	Potentiometric Surface, Lakota Aquifer, 2008
2.5	Potentiometric Surface, Unkpapa Aquifer, 2008
3.1	Background Monitoring (April 8 to May 26, 2008)
3.2	Flowmeter Readings (May 9 to May 24, 2008)
4.1	Dewey May 2008 Pumping Test Well Locations
4.2	Transducer Response at Dewey Test Pumping Well 32-3C, Observation Wells 32-5 and 32-4C
4.3	Transducer Response at Dewey Test Observation Wells GW-49, 29-7, and 32-9C
4.4	Non-responding Dewey Test Observation Wells 32-10 (Lakota) and 32-11 (Unkpapa) compared to Pumping Well
4.5	Drawdown and Analysis at Dewey Test Observation Well 32-5
4.6	Theis Recovery Analysis at Dewey Observation Well 32-5
4.7	Straight-line Analyses of Drawdown and Recovery at Dewey Pumping Well 32-3C
4.8	Distance Drawdown Analysis, Dewey Pumping Test
5.1	Burdock May 2008 Pumping Test Well Locations
5.2	Transducer Response at Burdock Test Pumping Well 11-11C, Observation Wells 11-15 and 11-14C
5.3	Transducer Response at Burdock Test Observation Wells 11-2, 11-19 and 11-17

List of Figures *(Continued)*

Figure	Title
5.4	Non-responding Burdock Test Observation Well 11-18 (Unkpapa) compared to Pumping Well and Observation Well 11-17 (Fall River)
5.5	Drawdown and Analysis at Burdock Test Observation Well 11-14C
5.6	Hantush-Jacob Leaky Confined Aquifer Analysis at Burdock Observation Well 11-14C
5.7	Straight-line Analyses of Drawdown and Recovery at Burdock Pumping Well 11-11C
5.8	Distance-Drawdown Analysis, Burdock Pumping Test

List of Drawings

Drawing	Title
4.1	Stratigraphic Cross-Section C-C', Dewey Pump Test
4.2	Stratigraphic Cross-Section D-D', Dewey Pump Test
5.1	Stratigraphic Cross-Section C-C', Burdock Pump Test
5.2	Stratigraphic Cross-Section D-D', Burdock Pump Test
5.3	Stratigraphic Cross-Section E-E', Burdock Pump Test

List of Appendices

Appendix **Title**

A Additional Information and Analysis Procedures

A-1 Background Monitoring and Barometric Efficiency Calculations

Figure A.1-1 Background Water Level and Site Barometer Readings, Dewey/Fall River Barometric Efficiency Calculations

Figure A.1-2 Background Water Level and Site Barometer Readings, Burdock/Lakota Barometric Efficiency Calculations

Figure A.1-3 Time-series from USGS Spreadsheet Method (Halford, 2006) for Dewey, Observation Well 32-4C Background Measurements and Site Barometer Readings

Figure A.1-4 Plotted Time-series Output for Dewey Observation Well 32-4C Background Measurements and Site Barometer Readings

A-2 Overview of Aquifer Test Analysis Procedures and Tools Used

B Dewey Test Supplemental Information

B-1 Well Completion Diagrams
B-2 Time and Water Level Data Values Used in Pumping Test Analysis: Dewey Test, Drawdown Data
B-3 Time and Water Level Data Values Used in Pumping Test Analysis: Dewey Test, Recovery Data
B-4 Additional Aquifer Parameter Determinations

Figure B.4-1 Theis Drawdown Analysis at Dewey Pumping Well 32-3C

Figure B.4-2 Theis Drawdown Analysis at Dewey Observation Well 32-5

Figure B.4-3 Theis Drawdown Analysis at Dewey Observation Well 32-4C

Figure B.4-4 Theis Drawdown Analysis at Dewey Stock Well GW-49

Figure B.4-5 Theis Drawdown Analysis at Dewey Observation Well 29-7

Figure B.4-6 Theis Drawdown Analysis at Dewey Upper Fall River Observation Well 32-9C

List of Appendices (Continued)

Appendix **Title**

Figure B.4-7 Theis-Cooper-Jacob Recovery Analyses, Dewey Observation Wells 32-4C and GW-49

Figure B.4-8 Theis-Cooper-Jacob Recovery Analyses, Dewey Observation Wells 32-5 and 32-9C

C Burdock Test Supplemental Information
- C-1 Well Completion Diagrams
- C-2 Time and Water Level Data Values Used in Pumping Test Analysis: Burdock Test, Drawdown Data
- C-3 Time and Water Level Data Values Used in Pumping Test Analysis: Burdock Test, Recovery Data
- C-4 Additional Aquifer Parameter Determinations

Figure C.4-1 Theis Drawdown Analysis at Burdock Pumping Well 11-11C

Figure C.4-2 Theis Drawdown Analysis at Burdock Observation Well 11-15

Figure C.4-3 Theis Drawdown Analysis at Burdock Observation Well 11-14C

Figure C.4-4 Theis Recovery Analysis at Burdock Observation Well 11-14C

Figure C.4-5 Theis Drawdown Analysis at Burdock Observation Well 11-2

Figure C.4-6 Hantush-Jacob Leaky Confined Aquifer Analysis at Burdock Observation Well 11-2

Figure C.4-7 Drawdown and Analysis at Burdock Test Observation Well 11-19 (Upper Lakota)

Figure C.4-8 Theis-Cooper-Jacob Recovery Analyses at Burdock Observation Wells 11-15 and 11-19

Figure C.4-9 Theis-Cooper-Jacob Recovery at Burdock Observation Wells 11-14C and 11-02

List of Appendices *(Continued)*

Appendix	Title
D	Laboratory Core Data
E	CD-ROM: Raw Pressure Transducer Data in WinSitu™ Format

Powertech (USA) Inc.
Dewey-Burdock Project
2008 Pumping Tests:
Results and Analysis

1.0 Introduction

Powertech Uranium Corp. (Powertech) is submitting an application to the United States Nuclear Regulatory Commission (USNRC) for the Radioactive Source Materials License to develop and operate the Dewey-Burdock Uranium Project using in-situ recovery (ISR) methods. The project is located near Edgemont, South Dakota in Custer and Fall River Counties and will consist of injection and production well fields and a central processing plant (ion exchange resin columns and yellowcake dryer) to recover the final uranium product.

Figure 1.1 shows the project location and license boundary. The Project is located approximately 12 miles north-northwest of Edgemont, South Dakota and spans northern Fall River and southern Custer Counties. The project boundary encompasses approximately 11,000 acres of private land on either side of County Road 6463. The Dewey-Burdock project will operate uranium ISR production facilities at both the Dewey and Burdock project areas, with a central processing plant located at the Burdock site. It is anticipated that the ISR well fields at each site will operate at an estimated flow rates of between 1500 gallons per minute (gpm) to 2000 gpm. Net withdrawal of groundwater during ISR leaching operations is expected to be 0.5 to 3 percent of total flow, or 10 to 60 gpm at each site. Total production from both sites is expected to produce approximately 1,000,000 pounds of U_3O_8 per year.

1.1 Objectives

USNRC NUREG 1569 Sections 2.7.2 and 2.7.3, Hydrology, Review Procedures (3) and Acceptance Criteria (3), describe the type of information and analyses that can fulfill the requirements for a description of Site hydrogeology. Consistent with the examples provided in the NUREG sections referenced above, the objective of this report is to provide the determinations of aquifer properties obtained with two pumping tests together with the results of laboratory tests Powertech conducted on related core samples. The pumping tests are interpreted in the context of geological and hydrogeological data that are summarized here and presented authoritatively in greater detail in NRC Technical Report Sections 2.6 and 2.7. The more detailed information presented outside this report consists of: (1) geologic cross-sections, including the underlying electric log data from test pumping wells, test observation wells and

nearby exploration boreholes; (2) isopach maps of the production zone, overlying confining units and aquifers and underlying confining units and aquifers; and (3) potentiometric surface maps of the major aquifers.

Other information prescribed in NUREG 1569 Section 2.7.1, Hydrology, Areas of Review (3), notably soil survey and baseline groundwater quality information, is presented in separate reports. It is noted that the pumping tests described here are not intended to replace well field-scale pumping tests that are proposed to be conducted prior to startup of each particular mine unit. The following information is included in this report:

- Site location maps
- A summary of previous pumping test results
- A synopsis of geologic and hydrogeologic information for the Project Area relevant to the interpretation of pumping tests, including detailed conceptual stratigraphic cross-sections illustrating the test layouts relative to ore-body features
- Presentation of the pumping test results, including raw test data (drawdown graphs) that provide overall response characteristics for all wells monitored during the tests
- Interpretation of aquifer parameters using type curve matches and other methods of parameter determinations
- Interpretation, based on the communication of pumping and observation wells that it is likely feasible to conduct ISR mining within limited portions of the major aquifers
- Interpretation, based on the pumping test data and laboratory core data, that there is likely additional vertical containment between major aquitards overlying and underlying the major aquifers

1.2 Report Organization

This report includes seven sections. Section 1 (this section) is the introduction. Section 2 describes site-specific geologic and hydrogeologic conditions followed by a summary of previous aquifer tests in the period 1979 to 1982. Section 3 describes the general procedures for well installation, test equipment used, background measurements, and data processing procedures for the pumping tests. Details of the background monitoring and analysis are provided in Appendix A-1, and Appendix A-2 provides an overview of pumping test interpretation methods, theoretical considerations, and spreadsheet tools used for test analysis. Section 4 describes the results and analysis of the pumping test at the Dewey test location; Appendix B provides backup data for the Dewey Pumping Test including well completion

diagrams, processed time-drawdown data used to perform the test analysis, and the determinations of aquifer parameters with graphical methods not directly presented in the text. Similarly, Section 5 describes the results and analysis at the Burdock test location and Appendix C provides the related data for the Burdock test. Section 6 is a summary of laboratory core testing information and Appendix D provides the laboratory data report for the core testing. Section 7 is a summary describing major conclusions from the testing. Appendix E is a CD-ROM that contains the raw digital pressure transducer data in binary files.

1.3 Limitations and Disclaimer

This report entitled "Powertech (USA) Inc., Dewey-Burdock Project, 2008 Pumping Tests: Results and Analysis" has been prepared by Knight Piésold and Co. for the exclusive use of Powertech (USA) Inc. No other party is an intended beneficiary of this report or the information, opinions, and conclusions contained herein. Any use by any party other than Powertech (USA) Inc. of any of the information, opinions, or conclusions is the sole responsibility of said party. The use of this report shall be at the sole risk of the user regardless of any fault or negligence of Powertech (USA) Inc. or Knight Piésold and Co.

The information and analyses contained herein have been completed to a level of detail commensurate with the objectives of the assignment. This report and its supporting documentation have been reviewed and/or checked for conformance with industry-accepted norms and applicable government regulations. Calculations and computer simulations have been checked and verified for reasonableness, and the content of the report has been reviewed for completeness, accuracy, and appropriateness of conclusions. To the best of the information and belief of Knight Piésold and Co. the information presented in this report is accurate to within the limitations specified herein.

Any reproductions of this report are uncontrolled and may not be the most recent revision.

2.0 Site Characterization

This section presents a synopsis of geologic and hydrogeologic information. Section 2.1 presents geologic information (see Figure 2.2) taken from Section 2.6 of the USNRC Technical Report. Section 2.2 presents hydrogeologic information presented in Section 2.7 of the Technical Report. Section 2.3 describes the history of previous aquifer testing in relation to uranium exploration and development.

2.1 Stratigraphy

The sedimentary rocks of interest that underlie the Dewey-Burdock Project range in age from Upper Jurassic to Early Cretaceous. These are the Upper Jurassic Sundance Formation, the Unkpapa Formation, and the Morrison Formation. The Early Cretaceous Lakota Formation, the Fall River Formation, the Skull Creek Shale Formation and the Mowry Shale Formation. Figure 2.1.

Underlying these, are rocks that range in age from Cambrian to Pennsylvanian in age. The sediments exposed at the Dewey-Burdock Project are of Early Cretaceous age.

2.1.1 Overlying Unit: Skull Creek Formation Shales

The combined Skull Creek Shale – Mowry Shale reaches a thickness of 400 ft (ft) in the western part of the Dewey-Burdock project.

Mowry Shale

The Mowry Shale consists of light gray marine shale with minor amounts of siltstone, fine grained sandstone, and a few thin beds of bentonite.

Newcastle Sandstone Formation

The Newcastle Sandstone, normally occurring between the Skull Creek Shale and the Mowry Shale, is composed of fine-grained sandstone interbedded with siltstones. This formation is discontinuous across the region and is absent across the project area. At the Dewey-Burdock Project the Skull Creek Shale is directly overlain by the Mowry shale.

Skull Creek Shale Formation

The Skull Creek Shale is a sequence of dark-gray to black marine shales. The Skull Creek shale consists of black shale, organic material, and some silt sized quartz grains. The Skull Creek

Shale has a thickness of approximately 200 ft. The Skull Creek Shale is eroded from the eastern parts of the project.

2.1.2 Inyan Kara Group: Fall River Formation and Lakota Formation Sandstones

Inyan Kara Group

The Early Cretaceous Inyan Kara Group consists of two formations, the Lakota and the Fall River. The Inyan Kara is composed of interbedded sandstone siltstone and shale. The depositional environment of the Inyan Kara is fluvial to marginal marine.

Fall River Formation

The Fall River formation is composed of carbonaceous interbedded siltstone and sandstone, channel sandstones, and a sequence of interbedded sandstone and shale. The lower part of the Fall River consists of dark carbonaceous siltstone interbedded with thin laminations of fine-grained sandstone. Channels were cut into this interbedded sequence by northwest flowing rivers and fluvial sandstones were deposited. These channel sandstones occur across various parts of the Dewey-Burdock Project and generally contain the uranium deposits. Overlying the channel sandstones is another sequence of alternating sandstone and shales.

Lakota Formation

The Lakota Formation consists of three members, from lower to upper is the **Chilson** Member, the **Minnewasta Limestone** Member and the **Fuson** Member.

The **Minnewasta Limestone** Member is not present in the Dewey-Burdock Project area.

The **Chilson** Member is composed largely of fluvial deposits. These deposits consist of sandstone, shale, siltstone, and shale. The unit consists of a complex of channel sandstone deposits and their fine-grained equivalents. The unit contains uranium deposits.

The **Fuson** Member is the upper most member of the Lakota Formation and the shale-siltstone portion of the Fuson has been used to divide the Lakota Formation from the Fall River Formation.

The Fuson is described as having a lower discontinuous sandstone unit at its' base and an upper discontinuous sandstone at the top of the member. If present the lower sandstone unit was

mapped as a Lakota sandstone. Similarly if the upper sandstone was present it was mapped as a Fall River sandstone. The Lakota was deposited by a northwest flowing river system.

2.1.3 Underlying Units: Morrison Formation Shale and Unkpapa/Sundance Formation Sandstone

Morrison Formation

The Upper Jurassic Morrison Formation was deposited as flood plain deposits. It is composed of waxy, unctuous, calcareous, noncarbonaceous massive shale with numerous limestone lenses and a few thin fine grained sandstones.

Unkpapa Formation

Overlying the Sundance Formation is a sandstone unit that has been called the Unkpapa formation. The Unkpapa is a massive fine grained sandstone that was deposited as sand dunes.

Sundance Formation

The Sundance Formation of Upper Jurassic age consists of marine rocks composed of red shales and sandstones. The Sundance has been subdivided into five members. In ascending order they are the **Canyon Springs** sandstone member, the **Stockade Beaver** shale member, the **Hulett** sandstone member, the **Lak** member, and the **Redwater** shale member.

2.2 Hydrogeologic Conditions: Potentiometric Surface and Hydraulic Gradient

Groundwaters within the Inyan Kara formations are under artesian conditions in much of the Dewey-Burdock area. Some wells are known to have flowed for years. Figure 2.3 is a potentiometric surface map of the Fall River Formation aquifer within the Inyan Kara group. The map is based on measurements made in 2008. Based on Figure 2.3, groundwater flow direction in the Fall River aquifer is generally to the southwest, consistent with the topography of the broad Black Hills domal uplift, with significant components either more southerly or more westerly as reflected by the curvature of the potentiometric surface equipotential lines.

Groundwater gradient in the Fall River aquifer varies significantly throughout the project area. Near the outcrop areas upgradient of both the Dewey and Burdock project portions of the Site, the gradient is about 20 to 25 ft per mile (0.0038 to 0.0047 feet per foot [ft/ft]). At the Burdock portion of the Site, the Fall River aquifer gradient flattens to about 14 ft per mile (0.0026 ft/ft) extending downgradient to the southwestern project boundary. At the Dewey portion of the Site,

however, the groundwater gradient in the Fall River aquifer increases sharply to as much as about 52 ft per mile [0.01 ft/ft] within the central portion of the project area.

Figure 2.4 is a potentiometric surface map of the Lakota Formation aquifer below the Fall River aquifer within the Inyan Kara Group, based on measurements made in 2008. Groundwater flow direction is generally to the southwest with locally more southerly component. At the Burdock portion of the site, the groundwater gradient is relatively uniform from the outcrop area to the project boundary, about 18 ft per mile (about 0.0034 ft/ft). At the Dewey portion of the site Figure 2.4 indicates a somewhat flatter overall gradient, about 16 ft per mile (0.003 ft/ft). However, within the central portion of the Dewey project area there a broad area where the potentiometric surface elevations in the Lakota are between 3,680 and 3,690 ft above mean sea level (amsl).

The variations in the potentiometric surfaces in both Inyan Kara formations produce variations in the direction of vertical gradients throughout the project area. At the Burdock portion of the Site, the potentiometric surface in the Fall River aquifer is generally close to that in underlying Lakota (Chilson) aquifer; where there are differences, the Fall River appears to be slightly higher in elevation by a few (less than five) feet. This indicates minimal overall vertical gradients with possible downward flow direction between the two formations through the intervening Fuson Member of the Lakota Formation.

By contrast, at the Dewey portion of the Site there are areas where the potentiometric surface in the Lakota Formation is 20 to 30 ft higher than in the overlying Fall River Formation, indicating a vertically upward gradient. This is consistent with the character of the intervening Fuson Member in previous pumping tests, described in Section 2.6 below, where the Fuson was described as leaky in the Burdock area but a more effective aquitard in the Dewey area. This was also noted in earlier investigations (Keene, 1973, p. 26), which stated that "pressures in the Lakota Formation appear greater than those of the Fall River aquifer in the northwestern townships of the [Fall River] county. This is reasonable when one considers the higher intake elevation of the Lakota Formation, the greater thickness of the Chilson Member than the Fall River sands, and the smaller production from the Lakota aquifer."

Figure 2.5 is a potentiometric surface map of the Unkpapa aquifer below the Inyan Kara group, based on measurements made in 2008 at four locations. The potentiometric surface in the Unkpapa Formation indicates groundwater flow direction to the southwest with locally more southerly components. Overall gradient is about 100 ft per 3 miles, which corresponds to an

average gradient of about 0.006 ft/ft. The potentiometric surface elevation is generally about 50 to 100 ft higher in both the overlying Lakota and Fall River Formation aquifers. This indicates vertical upward gradients between the Unkpapa Formation, the intervening Morrison Formation and the Inyan Kara Group. The Morrison Formation thus appears to function as an effective aquitard throughout the project area.

2.3 Summary of Previous Aquifer Testing Results

The Tennessee Valley Authority (TVA) conducted groundwater pumping tests from 1977 through 1982 as part of a uranium mine development project near the towns of Edgemont and Dewey, South Dakota. TVA produced two summary pumping test reports, "Analysis of Aquifer Tests Conducted at the Proposed Burdock Uranium Mine Site" (Boggs and Jenkins, 1980) and "Hydrogeologic Investigations at Proposed Uranium Mine Near Dewey, South Dakota" (Boggs, 1983). In addition, TVA prepared a draft Environmental Impact Statement for the proposed Edgemont Uranium Mine in 1979.

TVA first conducted two unsuccessful tests in 1977 at the Burdock test site. The results of the 1977 tests were considered inconclusive because of various problems including questionable discharge measurements, some observation wells improperly constructed, and some pressure gauges malfunctioned. No data from the 1977 tests are currently available.

TVA conducted three successful pumping tests, two in 1979 near the current Burdock Project Area, and one in 1982 about two miles north of the current Dewey Project Area. The results of these successful tests are described in separate sections below. However, no data for these tests, in particular electronic records of drawdown, are available, other than information contained in the reports.

2.3.1 Dewey Project Area

The Dewey test was conducted in 1982 northeast of the Dewey Road at the location shown on Figure 1.1. The test consisted of pumping in the Lakota formation for 11 days at an average rate of 495 gpm. The test developed the following information:

- Transmissivity of the Lakota averaged about 4,400 gallons per day per foot (gpd/ft) which is equivalent to 590 ft squared per day (ft^2/day).
- Storativity of the Lakota was about 1.0×10^{-4} (dimensionless).

- There was response between the Fall River and Lakota formations through the intervening Fuson shale-siltstone member that was manifested at relatively late time (3000 to 10000 minutes).

- The vertical hydraulic conductivity of the Fuson aquitard using the Neuman-Witherspoon ratio method (Neuman and Witherspoon, 1973) was 2 x 10^{-4} ft/day; storativity of the Fuson Member was not determined and specific storage was about 7 x 10^{-7} ft^{-1}.

- A barrier boundary, or a decrease in transmissivity due to lithologic changes with distance from the test site, or both, were observed; a possible geologic feature corresponding to a barrier was noted to be the Dewey Fault Zone, located about 1.5 miles north of the test site, where the Lakota and Fall River formations are structurally offset.

2.3.2 Burdock Project Area

The Burdock tests were conducted in 1979 near the Dewey road at the location shown on Figure 1.1. The Burdock tests consisted of separate pumping tests from the Lakota (Chilson) and Fall River Aquifer, respectively in April and July of 1979. The tests used the same pumping well with packers to alternately isolate screens open to the respective formations. Test durations were 73 hours for the Lakota test and 49 hours for the Fall River test. Pumping rates were about 200 gpm from the Lakota aquifer and 8.5 gpm from the Fall River. The reason for the unexpected low pumping rate from the Fall River aquifer was not specified in the TVA report.

The tests developed the following information:

- Interpreted transmissivity of the Lakota was based on analysis of later time data and inferred decreasing transmissivity with distance from the test site due to changes in lithology; overall transmissivity averaged about 1,400 gpd/ft (190 ft^2/day) and storativity about 1.8 x 10^{-4} (dimensionless); maximum transmissivity from early time data was about 2,300 gpd/ft (310 ft^2/day).

- Transmissivity of the Fall River averaged about 400 gpd/ft (54 ft^2/day) and storativity about 1.4 x 10^{-5} (dimensionless).

- There was communication between the Fall River and Lakota formations through the intervening Fuson shale-siltstone member; leaky behavior was observed in the Fall River Formation and believed to exist in the Lakota although "leakage effects in the Lakota drawdown data are masked by the conflicting effect of a decreasing transmissivity in site vicinity" (p. 16 in Boggs and Jenkins, 1980).

- The vertical hydraulic conductivity of the Fuson aquitard determined with the Neuman-Witherspoon ratio method (Neuman and Witherspoon, 1973) ranged from

10^{-3} to 10^{-4} ft/day; storativity was not determined, and specific storage was assumed to be about 10^{-6} ft^{-1}.

3.0 2008 Pumping Tests: Design and Procedures

In 2008 pumping tests were performed at both the Dewey and Burdock project areas. A work plan (Knight Piésold, 2008) was prepared and distributed to interested representatives of State and Federal agencies, including the South Dakota DENR and the USEPA. Individual production zones within the Inyan Kara Group will likely be on the order of 10 to 15 ft thick to target ore horizons in both the Fall River and Lakota aquifers. Uranium ore is often located at different horizons in both aquifers at the same spatial locations (Drawings 4.1, 4.2, 5.1, 5.2 and 5.3).

Powertech performed geologic interpretations, well design, well installation and mechanical integrity testing. Well completions are described in detail for the test layout at each of the Dewey and Burdock project areas (Sections 4 and 5). Field activities for the Dewey and Burdock pumping tests were jointly performed by Powertech and Knight Piésold personnel. Aquifer test analyses were performed and this aquifer testing report was written by Knight Piésold.

3.1 Well Installation, Completion and Mechanical Integrity Testing

Well bores are drilled to diameters specified in SDDENR regulations. New casing is set and 15.2 pounds per gallon (lb/gal) cement is positively displaced into the annulus. After a cement cure time not less than 24 hours, the well is pressured up with air for a minimum of 1 hour. After the mechanical integrity test has passed, the well is developed until the water runs clear, and the screen is then pushed into place. The casing is cut off to 2.5 ft above ground surface and capped. Applicable reports are filed with the State. Wells are not used under conditions that do not meet manufacturer's recommendations and specifications for its type (SDA74:02:04:42).

3.2 Pumping Test Equipment and Facilities

Powertech personnel installed the pumping and monitoring equipment prior to testing. Knight Piésold verified the performance of the pumping test equipment by conducting step-drawdown tests at each site. Thereafter, Knight Piésold performed or supervised pump operations throughout the constant rate tests together with the datalogger programming and day-to-day downloads of data.

The tests were performed using a 5-horsepower (Hp) electrical submersible pump powered by a portable generator. At each site the pump was set at 300 ft with 2-inch diameter drop pipe. Surface flow monitoring equipment were Cameron 1-inch NUFLO™ flowmeters and MP-III™ digital flow analyzer with readout of instantaneous flow and totalizer of flow. In accordance

with the temporary discharge permit received from South Dakota DENR, the pump discharge water was piped to temporary holding ponds via 1 1/4-inch diameter high density polyethylene plastic pipe. Throughout the tests, a portion of the discharge water was routed through a YSI™ flow-through cell with multi-parameter probe that read field parameters (temperature, pH, conductivity, dissolved oxygen and turbidity) that were recorded twice daily through pumping phases of the tests.

Water levels in each well were measured and recorded with vented In-Situ™ Level TROLL™ pressure transducers with built in data loggers. The pressure ratings for the transducers range from 100 to 300 pounds per square inch (psi). Transducer accuracy (in comparison to known pressure or other pressure reading devices) is stated by the manufacturer to be ±0.1 percent of full-scale reading (i.e., 100 to 300 psi), so the limit of accuracy varies from 0.1 to 0.3 psi, or about 0.2 to 0.7 ft. Transducer sensitivity is stated to be ±0.01 percent of full-scale, resulting in sensitivity limits of about 0.01 to 0.03 psi, or 0.02 to 0.07 ft.

The sequence of events before and during the 2008 pumping tests is summarized in Figures 3.1 and 3.2. Figure 3.1 illustrates background pressure transducer and site barometer measurements that are described in Section 3.3, below. Evaluation of the background monitoring data produced several methods for correcting water levels; however, after these were applied on a test data set it was concluded that necessary corrections to water level data were minimal and that the test interpretations could equally well rely on uncorrected time-drawdown data.

Figure 3.2 displays output from the discharge flow data logger that is described in Section 3.4, below.

3.3 Background Monitoring and Water Level Corrections

Pressure transducers were installed in wells at both sites by April 2, 2008 in order to obtain background groundwater level measurements. At the Burdock test site, a transducer was installed in the designated pumping well (DB07-11-11C) in the lower Lakota Formation. At the Dewey test site, a transducer was installed in observation well (DB07-32-4C), screened in the same zone as the pumping well in the lower Fall River Formation. The right hand axis of Figure 3.1 graphs hourly barometric pressure measurements in millibars obtained from the meteorological station installed at the site. The site station is maintained by South Dakota State University (SDSU) and data are available at the following URL: "http://climate.sdstate.edu/awdn/edgemont/archive3.asp".

One month of background measurements were obtained from April 8 to May 9, 2008 (Figure 3.1). Background measurements shown on Figure 3.1 fluctuate over a range of about 0.4 psi with the expected inverse relationship between site barometer readings and increases/decreases in groundwater levels. There are also smaller cyclic sinusoidal variations that occur twice daily and are attributable to Earth tide cycles. A period of two weeks (April 23 to May 8, 2008) after pump installation and initial testing produced undisturbed background water level data.

Three types of water level correction procedures were evaluated using the background monitoring data. The first procedure was manually correcting the transducer psi values with a constant barometric efficiency (BE) determined for each major aquifer (e.g., Kruseman and de Ridder, 1991). The BE is defined as the change in water level in a well versus a related change in atmospheric pressure. Gontheir (2007) describes the historical methods of determining BE, which by convention is dimensionless and ranges from zero to one.

The second type of correction that was evaluated considers additional factors, chiefly long-term seasonal trends and Earth tides (Gontheir, 2007). A spreadsheet distributed by the USGS as an open-file report (Halford, 2006) has programming that empirically factors the overall water level response into multiple synthetically generated time series with adjustments to both phase and amplitude of each component (see Appendix A.1, Figures A.1-3 and A.1-4). The USGS spreadsheet was used to determine that the Dewey background water level data from April 23 to May 8, 2008, could be closely matched as a series of four components: (1) water level increase at a linear rate [i.e., slope], (2) variation in air pressure measured with the site barometer, (3 and 4) two Earth tide components.

The third type of correction procedure evaluated was a computer method known as BETCO (Sandia Corporation, 2005; Toll and Rasmussen, 2006). This software is available at "http://www.sandia.gov/betco/". To correct data, water level, time and barometric pressure are input and BETCO calculates corrected water level values. Compared with the manual BE correction, the corrected water levels calculated in BETCO yielded similar results, generally within about ± 0.01 psi.

The manual BE method was judged to be better than the BETCO computer method for the background calibration period examined (Appendix A). Moreover, both the BETCO and USGS methods were difficult to apply with confidence to the drawdown data after the background monitoring period because wells with similar construction to the pumping test wells, but outside

the area of test influence, are not available to validate the corrections. A further difficulty with the BETCO and USGS computer methods is that they do not accommodate logarithmic measurement times as input data.

To examine the possible importance of BE corrections on water levels, the drawdown phase of the Dewey test was manually corrected with a BE of 0.48 (see Figure A.1-1 in Appendix A) relative to the site barometer over the test period. The maximum effect of the BE correction was to add about 0.2 ft to the water levels at the end of the drawdown phase due to an overall barometric pressure decline of about 15 millibars (i.e., from about 1,030 to 1,015 millibars, Figure 3.1). Test interpretations (Theis drawdown) were made with and without the BE corrections for the Dewey test. The corrections were found to have no discernable effect on the visual fits to type curves. Because the changes in barometric pressure during the 3-day constant rate tests at Burdock and Dewey were similar (Figure 3.1), the analysis determined that BE corrections would be no greater for the Burdock test compared to the Dewey test. Therefore, corrections to water level data were not further performed and the test interpretations rely on uncorrected time-drawdown data.

3.4 Test Procedures, Data Collection, Data Processing

The discharge flow data logger was set to record at hourly intervals and was downloaded at the end of the tests (Figure 3.2). The discharge flow rate was adjusted with a manual gate valve. Step-drawdown tests were performed on May 12 and 13, 2008 (Figures 3.1 and 3.2). The step-drawdown tests consisted of four steps at 10 gpm, 20 gpm, 25 gpm, and 30 gpm for a minimum of 90 minutes at each step. The step-drawdown data indicated successful performance of all equipment at both test sites. Subsequent analysis of the step-drawdown data was not performed due to the better quality (i.e., much longer time) data obtained from the constant rate tests for determining both aquifer parameters and well efficiencies.

Constant rate tests were performed on May 15 to May 18, 2008 at Dewey and from May 18 to May 21, 2008 at Burdock (Figures 3.1 and 3.2) after recovery from the step-rate tests. At both test sites the recorded hourly flow rates during the constant rate tests varied no more than 2 percent (between 30.0 and 30.7 gpm) throughout the tests and the pumping rates for the entire 3-day tests at each site averaged 30.2 gpm.

The data loggers in all wells were synchronized to the same clock-time immediately prior to start-up. To collect closely-spaced measurements during the start-up of the drawdown phase of the test, the transducers were programmed to record temperature and psi measurements at

one-second intervals for two hours, then at ten second-intervals for 70 to 72 hours. For recovery, the data loggers returned to a measurement frequency of one-second for two hours, during which time the pump was shut off, followed by ten-second measurement intervals thereafter.

The time-drawdown data output from the data loggers consisted of two hours of data at one-second intervals followed by 72 or 74 hours of data collected at ten-second intervals, with the sequence repeated for the recovery phase. The WinSitu™ software produced drawdown graphs that are reproduced in Sections 4 and 5. The software exported records to text ".csv" files with approximately 60,000 to 70,000 records for each well. The time-drawdown data were processed using a custom FORTRAN program that wrote data records to an output file based on a template file specifying which date-time records would be written. The template file was prepared to produce logarithmically spaced data with 30 records per log cycle (in seconds). Due to slight variations in transducer output and the precision of the Microsoft Excel date-time format, there are some ± one-second variations in the sequences of records from well to well.

The FORTRAN program also converted transducer psi to drawdown in ft using formulas described in Appendix A. The reference value for zero drawdown was set as the average of psi readings from the start of the data log to the time just prior to test startup. Separate time-drawdown files were prepared for both drawdown and recovery phases of the tests. Tables of the processed time-drawdown data used for test interpretations are provided in Appendices B and C. Complete binary files with the raw data for each well in Win-Situ™ format are also provided on a CD-ROM in Appendix E.

4.0 Dewey Project Area Pumping Test

4.1 Test Layout and Initial Potentiometric Surface Measurements

The Dewey pumping test well is located in NE ¼ NW ¼ Sec. 32, T.6S, R.1E, Custer County, South Dakota (Figure 4.1, Table 4.1). Powertech completed the pumping well (DB07-32-3C) with a fifteen-ft screen within the lower sandstone layer in the Fall River Formation near the roll front ore zones (Drawings 4.1 and 4.2). Three new observation wells were similarly screened at the same stratigraphic horizon within the lower Fall River Formation, located at radial distances of 265, 467 and 2,400 ft away from the pumped well (Figure 4.1 Table 4.1). A pre-existing stock watering well (GW-49) was also monitored. The stock well is located approximately 1,400 ft west of the pumped well and is believed (based on a recent electric log) to be an open hole for about 70 ft corresponding to about the top half of the Fall River formation.

Additional information on the design of the pumping test well layout and objectives for test analysis are provided in Appendix A.2. Well Construction diagrams and borehole electric logs for the Dewey test wells are provided, respectively, in Appendices B.1 and B.2.

Within a fifty-ft radius around the pumping well, additional observation wells were completed in a vertical nest in order to provide hydraulic data for the degree of confinement of both the test sandstone horizon and the entire Fall River Formation aquifer. Observation well DB-07-32-9C was screened in the upper Fall River aquifer at 41 ft lateral distance and 95 ft vertically above the screen in pumping well 32-3C. Observation well DB-07-32-10 was located within the underlying Lakota Formation 61 ft laterally and 130 ft vertically below the screen in the pumping well. Observation well DB-07-32-11 was located in the underlying Unkpapa Formation aquifer 50 ft laterally and 325 ft vertically below the screen in pumping well 32-3C.

Piezometric measurements (Eric Krantz, RESPEC, personal communication, May 2008) and well survey data provided by Powertech were used to calculate potentiometric surface elevations in ft above mean sea level with an estimated accuracy of ± 3 ft (Table 4.2). The potentiometric surface elevations for the Unkpapa, Lakota, and Fall River aquifers at the wells in the vertical well nest at the Dewey test site indicate artesian conditions. The three major geologic formations appear to be locally hydraulically isolated with upward vertical gradients, as follows:

- nearly 80 ft head difference upward (Table 4.2) between the Unkpapa and lower Lakota aquifers

- nearly 40 ft head difference upward between the lower Lakota and lower Fall River aquifers
- nearly 20 ft head difference upward between the wells screened in the lower Fall River and upper Fall River formation

4.2 Pumping Rate and Duration

The pumping phase of the constant-rate test at the Dewey area was started at 10:30:09 AM on May 15, 2008 and the pump was shut down at 12:30:59 PM on May 18, 2006, for a total duration of 4,440 minutes or 3.08 days (Figure 3.2). Because of the artesian condition in the pumping zone, the pumping well (32-3C) was shut-in, the pump turned on at 10:29:54 AM and the shut-in valve opened at 10:30:09 AM, the designated starting time of the test. The artesian observation wells had been left open for at least a day prior to startup to test for leakage from gaskets surrounding the transducer cables. Leakage during the constant rate test was not observed at any well except observation well 32-11 in the Unkpapa Formation, as described in Section 4.6, below.

The average pumping rate for the 3.08 day test was 30.2 gpm (Figure 3.2). During drawdown, there was a major flow rate adjustment where the gate valve was opened and throttled back; this occurred from 0.4 to 1.2 minutes and produces a discontinuity on logarithmically displayed time-drawdown data at the pumping well (Figure 4.7). Minor flow rate adjustments were also made at 21, 125, and 2777 minutes into the test that can also be seen on time-drawdown data for the pumping well (Figure 4.7). During recovery, the pumping well was initially left open to discharge water in piping and then shut-in when it was determined that the well was discharging due to artesian flow; this produces a discontinuity shown on the recovery plot for the well (Figure 4.7).

4.3 Responses at Pumping and Observation Wells

Table 4.2 summarizes the responses to pumping for the Dewey test. Figures 4.2, 4.3 and 4.4 display the transducer responses. Drawdown throughout the lower Fall River aquifer was 44.8 ft at the pumping well and ranged from 13.0 to 1.5 ft at the observation wells. Response to pumping varied progressively with distance from the pumping well throughout the lower Fall River: within 3 minutes at the two observation wells at 265 and 467 ft, and response was at 140 minutes at 2,400 ft distance. Similarly, the upper Fall River stock well (GW-49) responded at 40 minutes at 1,400 ft distance (Table 4.2).

However, it took 10.6 minutes for upper Fall River well (32-9C) to respond at 41 ft radial distance and 95 ft vertical distance (Table 4.2. The delayed response at the upper Fall River well is attributed to vertical anisotropy due to shale interbeds overlying the lower sandstone layer (Drawings 4.1 and 4.2).

The pumping and observation wells generally had symmetrical patterns of drawdown response and recovery response, except at the distant observation well 29-7 (Figure 4.3). There, the drawdown began at 140 minutes into the test, and drawdown continued to a maximum of 2.1 ft at about two days after the pump was shut down (Table 4.2). Therefore, the recovery response at well 29-7 was not further analyzed.

4.4 Determination of Aquifer Parameters

Aquifer parameters determined with the Theis drawdown, Theis recovery, Cooper-Jacob drawdown, Theis-Cooper-Jacob recovery, and distance drawdown methods are summarized in Table 4.3. Appendix A provides a definition of the well function parameters (u, u'), a complete description of the methods used, and corresponding assumptions for aquifer parameter determinations. For the straight-line methods, analyses with u or u' > 0.01 are reported but are not considered acceptable, as indicated in the table. Appendix B provides the graphical analyses that determined aquifer parameters at each well listed in Table 4.3.

The following discussion and Figures 4.5 through 4.8 illustrate the overall analysis of the pumping test and exemplify the determination of aquifer parameters with figures illustrating each of the major graphical analysis methods used. The observation well exhibiting the most diagnostic response is discussed first, followed by the drawdown at all observation wells, the drawdown at the pumping well, and finally the recovery at all wells.

4.4.1 Theis Drawdown and Recovery Analysis

Figure 4.5 displays time drawdown data and analysis on the log-log Theis plot for the closest observation well (32-5 at 265 ft distance). The data indicate a confined aquifer response fitting the Theis type curve until latest time, where there is a barrier boundary, where the drawdown increased above the theoretical rate of drawdown. The boundary was encountered at a time of about 0.6 days into the test (Table 4.2). The data at the next closest observation wells (32-4C and the stock well GW-49) also suggest a barrier boundary at times ranging from about 0.7 to 1.9 days into the test (Table 4.2).

Drawdown analyses using the Theis method for all applicable wells (i.e., 32-3C, 32-5, 32-4C, 29-7, and GW-49) are given in Appendix B.4 (Figures B.4-1 through Figure B.4-5) and summarized in Table 4.3. The Theis analyses in Appendix B use test analysis software (AquiferWin32™ ESI, 2003). Input data is weighted to ignore the late-time barrier boundary using an automated curve matching procedure. The weighting for all samples is the same, as follows: time-drawdown data before the first response are ignored, and data after the earliest occurrence of the barrier boundary at any of the wells (0.6 days) are ignored. The aquifer parameters transmissivity and storativity determined with Theis analyses are summarized in Table 4.3.

Figure B.4-6 in Appendix B shows the data at observation well 32-9C, completed in the upper Fall River 41 ft radially and 95 ft vertically from the screened interval in the pumping well. Samples are weighted as described above. This data cannot be interpreted successfully with the Theis analysis because only the middle-time portion of the drawdown closely follows the type curve. The poor fit to the Theis curve for well 32-9C yields a transmissivity of 217 ft^2/d, a value within the range of other observation wells, but a high storativity value of 0.016, which is inappropriate for a confined aquifer (e.g., Freeze and Cherry, 1979, Halford and Kuniansky, 2002). The artificially high storativity is attributed to the time-delay in response. The time-delay is attributed to vertical anisotropy as described in Section 4.3, above. Therefore, aquifer parameters from this well are reported in Table 4.3 but are not considered reliable determinations and are not used in determining the overall average aquifer parameters for the test.

4.4.2 Theis-Cooper-Jacob Straight-line Analysis

Figure 4.6 displays the Theis recovery analysis at the closest observation well 32-5 using automated straight-line fitting in AquiferWin32™ software. Appendix A.2 provides an overview of the theoretical basis for straight-line test analysis and definitions for the terms u', t and t'. Samples are weighted according to (1) the theoretical criterion that u' be < 0.01, which restricts the data to later-time (to the left on the t/t' axis); and (2) the portion of the recovery before the change in slope due the barrier boundary. The sample weighting restricts the matched straight-line portion of the recovery plot to the line-segment shown in Figure 4.6 and a value for the transmissivity, but not storativity, is obtained (Table 4.3).

Figure 4.7 (top) shows a Cooper-Jacob straight-line drawdown plot for the Dewey pumping well 32-3C. This USGS graphical-analysis tool is a spreadsheet that allows manual fitting of the straight-line (Halford and Kuniansky, 2002). The portion of the plot corresponding to later time

where is indicated, and this slope is used to determine transmissivity of 250 ft^2/d and well efficiency of 81 percent (Table 4.3).

The bottom portion of Figure 4.7 shows the USGS spreadsheet implementation of the Theis recovery analysis for the pumping well 32-3C, referred to as the Theis-Cooper-Jacob method (Halford and Kuniansky, 2002). Similar to Figure 4.6, the portion of the plot corresponding to later time is indicated to the left on the t/t' axis, and this slope is used to determine transmissivity of 270 ft^2/d (Table 4.3). The recovery plot at the pumping well also shows the change in slope with an increase in rate of drawdown at the latest times which is ignored in the manual fit of the straight-line.

4.4.3 Distance-Drawdown Analysis

Figure 4.8 is distance-drawdown analysis plot that determines transmissivity, storativity, and pumping well efficiency by considering all observation wells at once. The pumping well efficiency of 93 to 95 percent is determined by extending the straight line to the assumed diameter of the pumping well (0.25 ft for the 6-inch diameter well casing or possibly 0.33 ft for the 8-inch diameter borehole) relative to the actual drawdown observed at the pumping well. The aquifer parameters and the high efficiency are somewhat questionable given the relatively poor ($r^2 = 0.7$) straight-line fit through all data points. However, transmissivity and storativity values obtained are reasonable and the distance drawdown results are included in the overall average aquifer parameters for the test (Table 4.3).

The distance-drawdown analysis also gives the maximum radius of influence of the test. Based on Figure 4.8, the radius of influence was about 5,700 ft, about twice the radial distance to the most distant responding well (i.e., 29-7 at 2,400 ft). The radius of influence may be compared to the dimensions of prospective well fields in the area to evaluate whether aquifer parameters have been adequately characterized.

4.4.4 Summary of Dewey Test – Lower Fall River Formation Aquifer Parameters

The aquifer parameters determined by the techniques described above are summarized in Table 5.3. Ten accepted determinations of transmissivity (outlined) range from 180 to 330 ft^2/day and the mean and median are close at 251 to 255 ft^2/day. The five accepted storativity determinations ranged from 2.3×10^{-5} to 2.0×10^{-4}. The geometric mean and median storativity values are respectively 5.2 to 4.6×10^{-5}. The median transmissivity of 255 ft^2/day and median storativity of 4.6×10^{-5} are considered the best measures of the central tendency of the test results.

4.5 Underlying Lakota Aquifer Test Results

Observation well (DB-07-32-10, Figure 4.1, Drawing 4.2) was located within the underlying Lakota Formation 61 ft laterally and 130 ft vertically below the screen in pumping well 32-3C. Figure 4.4 illustrates that there was no response of observation well 32-10 to the drawdown or recovery phases at the pumping well 32-3C. Therefore, there was no further analysis of this observation well.

4.6 Underlying Unkpapa Aquifer Test Results

Observation well DB-07-32-11 is screened in the underlying Unkpapa Formation aquifer 50 ft radially and 325 ft vertically below the screen in pumping well 32-3C (Table 4.1). Figure 4.4 depicts a generally rising trend in transducer response with sinusoidal variations associated with Earth tides indicating the aquifer remained undisturbed when the pump was turned on and turned off. Mid-way through the recovery, a shift in the pressure response on May 20, 2008 was noted similar to when leaks in the gasket-seal were observed previously. The threaded cap and gasket were checked on May 21, 2008 and found to be moist suggesting that a temporary leak may have occurred.

Figure 4.4 illustrates that there was no response of observation well 32-11 to the drawdown or recovery phases at the pumping well 32-3C. Therefore, there was no further analysis of this observation well.

5.0 Burdock Project Area Pumping Test

5.1 Test Layout and Initial Potentiometric Surface Measurements

The Burdock pumping test well is located in NE ¼ SW ¼ Sec. 11, T.7S, R.1E, Fall River County, South Dakota (Figure 5.1, Table 5.1). Powertech completed the pumping well (DB07-11-11C) with a ten-ft screen within a lower sandstone layer in the Lakota (Chilson) formation. Hereafter, the term Lakota is used to refer to the Chilson member of the Lakota formation. The ten-ft screen was set near the horizon of the lower Lakota ore zone(s), indicated by the roll fronts on Drawings 5.1 through 5.3. Three new observation wells were similarly screened at the same stratigraphic horizon within the lower Lakota Formation, located at radial distances of 243, 250 and 1,292 ft away from the pumped well (Figure 5.1, Table 5.1).

Additional information on the design of the pumping test well layout and objectives for test analysis are provided in Appendix A.2. Well Construction diagrams and borehole electric logs for the Burdock test pumping and observation wells are provided respectively, in Appendices C.1 and C.2.

Within a fifty-ft radius around the pumping well, additional observation wells were completed in a vertical nest in order to provide hydraulic data for the degree of confinement of both the test sandstone horizon and the entire Lakota formation aquifer. Observation well DB-07-11-19 was screened in the upper Lakota aquifer at 50 ft lateral distance and 100 ft vertical distance above the screen in pumping well 11-11C. Observation well DB-07-11-19 was located within the overlying Fall River Formation 61 ft laterally and 180 ft vertically above the screen in the pumping well. Observation well DB-07-11-18 was located in the underlying Unkpapa Formation aquifer 50 ft radially and 195 ft vertically below the screen in the pumping well.

Piezometric measurements (Eric Krantz, RESPEC, personal communication, May 2008) and well survey data provided by Powertech were used to calculate potentiometric surface elevations in ft msl with an estimated accuracy of ±3 ft (Table 5.2). The potentiometric surfaces of the Lakota and Fall River aquifers at the wells in the vertical well nest at the Burdock site indicate confined and non-artesian conditions. The two major aquifers (Fall River and Lakota) appear to be locally hydraulically connected through the intervening Fuson Member with minimal vertical gradients because the water levels are similar within ± 2-3 ft (Table 5.2).

Piezometric surface information for the Unkpapa and Lakota/Fall River aquifers indicate that the Unkpapa formation aquifer is artesian and hydraulically isolated with a nearly 70 ft head difference directed vertically upward (Table 5.2).

5.2 Pumping Rate and Duration

The pumping phase of the constant-rate test at the Burdock area was started at 2:20:36 PM on May 18, 2008 and the pump was shut down at 2:30:37 PM on May 21, 2008, for a total duration of 4,320 minutes or 3.0 days. The average pumping rate was 30.2 gpm. A flow rate adjustment was made at 160 minutes into the test that can be seen on logarithmic time-drawdown data for the pumping well (Figure 5.7). The average pumping rate for the 3.0 day test was 30.2 gpm (Figure 3.2).

5.3 Responses at Pumping and Observation Wells

Table 5.2 summarizes the responses to pumping for the Burdock test. Figures 5.2, 5.3 and 5.4 display the transducer responses. Drawdown throughout the lower Lakota aquifer was 91.1 ft at the pumping well and ranged from 17.0 to 3.1 ft at the observation wells. Response to pumping varied with distance from the pumping well in the Lakota aquifer in a non-systematic manner indicating significant lateral and vertical anisotropy, as follows:

- Response was within 3.6 minutes at the observation well (11-14C) at 250 ft distance with 17 ft of ultimate drawdown (Table 5.2).
- But the other lower Lakota observation well at 243 ft distance (11-15) took 140 minutes to respond, with 10 ft of ultimate drawdown.
- Upper Lakota observation well 11-19 took 160 minutes to respond with 3.4 ft ultimate drawdown at 50 ft radial distance and 100 ft vertical distance.
- First response was at 280 minutes at the most distant well (11-2) at 1,292 ft distance.

The responses of close-in well 11-14C and the distant well 11-2 are interpreted as a typical sequence of response to pumping well in a confined aquifer with similar transmissivity connecting all three wells. The delayed response at the upper Lakota well 11-19 is attributable to vertical anisotropy due to shale interbeds overlying the lower sandstone layer (Drawings 5.1 through 5.3). The delayed response of the closest observation well 11-15 requires an explanation in addition to lateral anisotropy. Powertech geologists were contacted and have subsequently indicated that there may have been problems with the installation of well 11-15 because it was subjected to intensive efforts during development.

Figures 5.2 through 5.4 indicate symmetrical patterns of drawdown response and recovery response, such that if the drawdown response was delayed there was a generally similar time before the recovery response (e.g., wells 11-2, and 11-19 on Figure 5.3). The anomalous recovery response at observation well 11-17, screened in the overlying Fall River aquifer, is discussed in Section 5.5, below.

5.4 Determination of Aquifer Parameters

Aquifer parameters determined with the Theis drawdown, Hantush-Jacob drawdown, Cooper-Jacob drawdown, Theis-Cooper-Jacob recovery and distance drawdown methods are summarized in Table 5.3. For the straight-line methods, analyses with u or u' > 0.01 are reported but are not considered acceptable, as indicated in the table. Appendix A provides a complete description of the methods used and corresponding assumptions for aquifer parameter determinations. Appendix C provides the graphical analyses that determined aquifer parameters at each well listed in Table 5.3.

The following discussion and Figures 5.5 through 5.8 illustrate the overall analysis of the pumping test and exemplify the determination of aquifer parameters with figures illustrating each of the major graphical analysis methods used. The observation well exhibiting the most diagnostic response is discussed first, followed by the drawdown at all observation wells, the drawdown at the pumping well, and finally the recovery at all wells.

5.4.1 Theis Drawdown Analysis

Figure 5.5 displays time-drawdown data and analysis on the log-log Theis plot for close-in observation well 11-14C at 250 ft distance. The data indicate confined aquifer response fitting the Theis type curve for the first 1.1 days of the test. After 1.1 days, the drawdown indicates a recharge boundary or vertical leakage from an adjacent confining layer where the actual rate of drawdown is less than the theoretical rate of drawdown. The drawdown at the most distant observation well (11-2 at 1,292 ft distance) also fits the Theis type curve for the first 1.8 days of the test (see Appendix C, Figure C.4-5) at which time a recharge boundary is encountered. Boundary responses are summarized in Table 5.2.

Drawdown analyses using the Theis method for all applicable wells (i.e., 11-11C, 11-15, 11-14C and 11-29) are given in Appendix C.4 (Figures C.4-1 through Figure C.4-5) and summarized in Table 5.3. The Theis analyses in Appendix C use test analysis software (AquiferWin32™ ESI, 2003). Input data is weighted to ignore the late-time recharge boundary using an automated curve matching procedure. The weighting for all samples is the same, as follows:

time-drawdown data before the first response are ignored, and data after the earliest occurrence of the recharge boundary at any of the wells (1.1 days) are ignored. The aquifer parameters transmissivity and storativity determined with Theis analyses are summarized in Table 5.3.

The data at the close-in Lakota observation well 11-15 at 243 ft distance are successfully fitted with the Theis curve and recharge boundary (see Appendix C, Figure C.4-2). A trial analysis of the best fit yields a transmissivity value lower than the range of other observation wells and a relatively high storativity value of 0.0013. Because this storativity value is high compared to confined aquifers in general (e.g., Freeze and Cherry, 1979, Halford and Kuniansky, 2002) and also the other Burdock test wells (Table 5.3), aquifer parameters from this well were not further considered. The high storativity is attributable to the delayed response time (140 minutes at 243 ft distance), and the cause of the delay is attributed to problems with well construction.

At observation well 11-19, completed in the upper Lakota 50 ft radially and 130 ft vertically from the screened interval in the pumping well, the drawdown data appear to be interpretable with the Theis analysis and yield a transmissivity value within the range of other observation wells (see Appendix C, Figure C.4-7). However, the very high storativity value of 0.10 is inappropriate for a confined aquifer. As described in Appendix A.2, there are a number of violations of the Theis test conditions when attempting to analyze drawdown due to pumping between partially penetrating well screens set apart 130 ft vertically. The artificially high storativity is attributed to the time-delay in response (160 minutes). The time-delay is attributed to vertical anisotropy as described in Section 5.3, above. Therefore, aquifer parameters from this well were not further considered.

5.4.2 Hantush-Jacob Drawdown Analysis

The AquiferWin32™ software implements the Hantush-Jacob (Hantush and Jacob, 1955) analytical model for drawdown analysis that follows the Theis curve in early-time and calculates a flattening recharge boundary due to vertical leakage from an assumed overlying leaky confining layer. The vertical leakage is described in the term r/B, which is implemented in this analysis as follows:

- $r/B = r/((T\ b')/K')^{0.5}$
- T transmissivity of confined Lakota aquifer (assume provisional value of 145 ft^2/day)
- b' thickness of Fuson member aquitard/confining layer (35 ft, based on Drawing 5.3)

- K' vertical hydraulic conductivity of Fuson (10^{-3} ft/day from the TVA test, Section 2.3.2)
- radial distance (r = 250 ft to well 11-14C and 1,292 ft to well 11-2)
- r/B well 11-14C = 0.11; r/b well 11-2 = 0.57

Figure 5.6 shows the Hantush-Jacob analysis at observation well 11-14C where r/B is input as fixed and all data after initial response are equally weighted. It is noted that automated curve-fitting in the AquiferWin32™ software can also be set to optimize to r/B, and a value of 0.11 is also obtained, indicating that this is a good match. For distant observation well 11-2 the software optimized to an r/B value of 0.77, so the calculated value of 0.57 was fixed (see Figure C.4-6 in Appendix C). Transmissivity and storativity values obtained through the curve matching at the two observation wells are entered in Table 5.3.

5.4.3 Theis-Cooper-Jacob Straight-line Analysis

Figure 5.7 (top) shows a Cooper-Jacob drawdown plot for the Burdock pumping well 11-11C. This USGS graphical-analysis tool is a spreadsheet that allows manual fitting of the straight-line (Halford and Kuniansky, 2002). Appendix A.2 provides an overview of the theoretical basis for straight-line test analysis and definitions for the terms u, u', t and t'. The portion of the plot corresponding to later time where u < 0.01 is indicated, and this slope is used to determine transmissivity of 150 ft^2/day and well efficiency of 65 percent (Table 5.3).

The bottom portion of Figure 5.7 shows the USGS spreadsheet implementation of the Theis recovery analysis for the pumping well 11-11C, referred to as the Theis-Cooper-Jacob method (Halford and Kuniansky, 2002). The portion of the plot corresponding to later time where u' < 0.01 is indicated to the left on the t/t' axis, and this slope is used to determine transmissivity of 140 ft^2/d (Table 5.3). A definite change in slope indicating a late time leakage/recharge boundary is not apparent at the pumping well, but the late-time data has a slight upward concavity indicating reduction in the rate of drawdown.

The results of Theis recovery analyses for all wells are summarized in Table 5.3, together the u' criteria on which each transmissivity determination is based. Analyses with u' > 0.01 are tabulated but are not considered acceptable, as indicated in the table.

5.4.4 Distance-Drawdown Analysis

Figure 5.8 is distance-drawdown analysis plot that determines transmissivity, storativity, and pumping well efficiency by considering all observation wells at once. As shown on Figure 5.8,

fitting a straight line to incorporate the close-in observation wells 11-14C and 11-15 simultaneously is not ideal because it averages the clearly anisotropic response between the close-in wells. On the other hand, convention (Driscoll, 1986 and numerous other references) dictates that a distance-drawdown analysis should be based on a minimum of three observation wells. It is noted that if a two-well solution is used ignoring the anisotropic response at well 11-14C, transmissivity is 108 ft^2/day and storativity is 2.8×10^{-5}. Nevertheless, the three-well solution with greater transmissivity and storativity is accepted as indicated on the figure and in Table 5.3.

The pumping well efficiency of 61 to 63 percent is determined with the three-well distance-drawdown solution by extending the straight line to the assumed diameters of the pumping well. These efficiencies agree with the 65 percent determined in the USGS spreadsheet (Table 5.3). The aquifer parameters are somewhat questionable given the relatively poor ($r^2 = 0.7$) straight-line fit through all data points. Based on the large u criterion (0.08) at one of the wells (11-15), the transmissivity and storativity values obtained are not included in the overall average aquifer parameters for the test (Table 5.3).

The distance-drawdown analysis also gives the maximum radius of influence of the test. Based on Figure 5.8, the radius of influence was about 2,100 ft, somewhat greater than the radial distance to the most distant responding well (i.e., 11-2 at 1,292 ft). The radius of influence may be compared to the dimensions of prospective well fields in the area to evaluate whether aquifer parameters have been adequately characterized.

5.4.5 Summary of Burdock Test – Lower Lakota (Chilson) Formation Aquifer Parameters

The aquifer parameters determined by the techniques described above are summarized in Table 5.3. Nine accepted determinations of transmissivity (outlined) range from 120 to 223 ft^2/day and the mean and median are close at 150 and 158 ft^2/day. Four accepted storativity determinations ranged from 6.8×10^{-5} to 1.9×10^{-4}. The geometric mean and median storativity values are 1.1×10^{-4} and 1.2×10^{-4}. The median transmissivity of 150 ft^2/day and median storativity of 1.2×10^{-4} are considered the best measures of the central tendency of the test results.

Only two wells were used to contribute to the overall storativity results because of the large anisotropy in responses exhibited between wells 11-15 and 11-14C and the anomalous results at

11-15 described above. Powertech geologists have noted that there were problems with the installation of well 11-15.

5.5 Overlying Fall River Aquifer Test Results

Observation well 11-17 is screened in the lower Fall River 50 ft laterally and about 185 ft vertically above the screen in pumping well 11-11C (Table 5.2, Drawing 5.3). Piezometric surface information for the Lakota aquifer indicates the two wells are locally hydraulically connected with similar water levels within ± 2 ft (Table 5.2).

Figure 5.3 illustrates response of observation well 11-17 to the drawdown phase of the Burdock well 11-11C pumping in the Lakota Formation. The first response was a very slight increase in pressure over a period of about 600 minutes, corresponding to a water level increase of about 0.12 ft (3.5 centimeter [cm]). The water level stopped increasing then underwent 1.1 ft of drawdown to time of pump shut-down (2:00 PM) on May 21, 2008. Drawdown continued for about a day to a maximum of 1.4 ft, then remained flat with erratic fluctuations for another 24 hours, until the evening of May 23, 2008 where a partial and sharply "spiked" recovery started.

The response of a "reverse" drawdown monitored in a zone above (or below) the pumping zone is known as the Noordbergum effect (Ohio EPA, 2006). There is uncertainty whether the water level increase at Burdock well 11-17 is the Noordbergum effect or alternatively a barometric response. In any case, the Noordbergum effect was observed in the 1979 TVA Lakota aquifer pumping test at Burdock pumping at 200 gpm where increases in water levels were monitored in the Fall River aquifer and Fuson Member observation wells for 30 to 90 minutes after the start of the test. Judging from the water level plot figures (Boggs and Jenkins, 1980), the increases were a fraction of a ft in the Fall River and up to about 1.5 ft in the Fuson.

In a 1985 pumping test in the Eastern Black Hills near Wall, South Dakota, pumping at 125 gpm, a water level rise of about 1.7 ft just after pumping started, eventually declining in an "erratic manner", was attributed to the Noordbergum effect (Rahn, 1992). There the well (Kelly Well) with the anomalous response was open to an unknown portion of the Inyan Kara aquifer; however it was considered to be somewhat hydraulically isolated from the pumping and other observation wells based on differing background water levels.

The fact that substantial Noordbergum effects were observed in pumping tests in the Fuson/Fall River and Inyan Kara (undifferentiated) monitoring wells at widely spaced locations in the Black

Hills uplift (i.e., the TVA and Wall tests) suggests the effect is a characteristic of the Inyan Kara Group. A small magnitude Noordbergum effect response observed in the 2008 test at Burdock is attributable to the much lower pumping rate and relatively short, 10-ft screened intervals of both pumping and observation wells. The Noordbergum effect of a 10 cm rise in water levels has been simulated with numerical models by the USGS (Hsieh, 1997), where three-dimensional deformation caused by groundwater withdrawal from a confined aquifer can induce positive hydraulic head changes in adjacent aquitards (and presumably in an aquifer overlying an aquitard).

An alternative explanation for the slight rise in water level in the Fall River (Burdock 11-17) is found in similar patterns of water level changes seen in the Unkpapa Formation (Burdock 11-18), underlying the Lakota Formation, at about the same time and magnitude. This will be described further in Section 5.6 below.

Referring again to Figure 5.3, an explanation for the drawdown in the Fall River aquifer at Burdock continuing for about a day past the pump shut-down and then stabilizing for another day is not apparent. It is most similar to the 1.5 days of extended drawdown and poor recovery observed at well 29-7 at the Dewey pumping test. These anomalous responses are attributed to the observation wells having been located away from the sandstone layer with the pumping well; it is possible the observation wells are monitoring localized effects in sedimentary facies separated from the pumping well by numerous shale layers,

5.6 Underlying Unkpapa Aquifer Test Results

As discussed in Section 3, observation well 11-18 is screened in the Unkpapa aquifer 35 ft laterally and 195 ft vertically below the screen in pumping well 11-11C (Table 5.1). Piezometric surface information for the Unkpapa and Lakota aquifers indicate the two wells are locally hydraulically isolated, with a nearly 70 ft head difference directed vertically upward (Table 5.1).

Figure 5.4 illustrates that there was no response of observation well 11-18 to the drawdown or recovery phases at the pumping well 11-11C. However, comparison with the Fall River observation well (Burdock 11-17, Figure 5.3) finds a similar pattern, timing and magnitude of several water level changes. In addition to the early time rise in water levels (i.e. possible Noordbergum effect described above) starting at about 2:00 PM on 5/18/08 (i.e., the time of pump shut-down and start of recovery), there are the following similarities:

- the erratic transducer readings starting at about 3:00 PM on 5/22/08

- the upward spike in transducer readings at about 7:00 PM on 5/23/08

The barometer readings for the site (Figure 3.1) were examined in detail, and there is a possible correlation with barometric fluctuations where the water level increases start at the times of temporary declines (troughs) in barometric pressure throughout an overall period of increasing atmospheric pressure (i.e., going forward in time from the start of Burdock Recovery on Figure 3.1). However, throughout several days there were equally large fluctuations in barometric pressure with no similar corresponding changes in water levels.

An explanation for the water level variations simultaneously in both wells is that the Unkpapa monitoring well 11-18 (Figure 5.4) records a barometric and tidal response while the Fall River monitoring well 11-17 (Figure 5.3) records a combination of both drawdown (without recovery) and barometric response. As noted above, the existence of the Noordbergum effect at the Fall River monitoring well is possible but uncertain.

6.0 Laboratory Core Data

6.1 Background

Selected core samples were sent to Core Laboratories by Powertech (Personal Communication, Frank Lichnovsky, February 1, 2008) for measurement of intrinsic permeability to assess the differences in the less permeable Skull Creek shale, Fuson shale, Morrison shale, and interbed units of the Dewey (Fall River) and Burdock (Lakota) sandstone units. The intrinsic permeability data were converted to hydraulic conductivity values as shown in Table 6.1.

6.2 Conversion from Intrinsic Permeability to Hydraulic Conductivity

Intrinsic permeability is a property of the core material (rock) only and does not include any fluid properties. The core intrinsic permeability was measured by moving air through the core under confining pressure in the laboratory which resulted in the measurement of both porosity (from the bulk density and particle density of the core) and intrinsic permeability in milliDarcys (mD) as shown in Table 6.1. The footnotes at the bottom of Table 6.1 show the constants assumed for the conversion from intrinsic permeability to hydraulic conductivity at the prevailing temperatures of the laboratory, assumed to be 70 °F, and the site groundwater (average of 52.8 °F from field measurements by RESPEC (Personal Communication, Crystal M. Hocking, February 4, 2008).

It is well known that the units of intrinsic permeability can be changed from mD to cm^2 by using equations shown in Table 6.1. The intrinsic permeability is multiplied by the fluid properties of water density times the gravitational constant divided by the dynamic viscosity (both temperature dependent) of the site groundwater to obtain the hydraulic conductivity.

Analyses of core data in Table 6.1 indicate that the horizontal hydraulic conductivity of the Skull Creek shale is approximately 6.0×10^{-8} centimeters per second (cm/s). The horizontal hydraulic conductivity of the Fuson Shale ranges from 8.0×10^{-7} to 3.2×10^{-8} cm/s, and for the Morrison between 7.7×10^{-7} and 3.1×10^{-9} cm/s. Vertical hydraulic conductivities of the Skull Creek and Morrison shales, and the Fuson shale from the Dewey project area, are typically one-tenth to one-twentieth the horizontal values. In terms of ft per day (ft/day) vertical hydraulic conductivities for all the above shale units range from about 2 to 6×10^{-5} ft/day.

The average vertical hydraulic conductivity for the two core samples from the Fuson shale from the Burdock project area is considerably more permeable (9.8×10^{-8} cm/sec), at roughly 25 percent the horizontal value. In terms of ft/day, vertical hydraulic conductivities for the

Burdock Fuson shale units are about 3 x 10^{-4} ft/day, about one order of magnitude less than the Fuson shale sample at the Dewey project area (2 x 10^{-5} ft/day) and also all the Skull Creek and Morrison shale samples.

In contrast, the core units of the Burdock Lakota sandstone unit have an average horizontal hydraulic conductivity of 2.6 x 10^{-3} cm/s (7.4 ft/day), ranging from 2.1 x 10^{-3} to 3.2 x 10^{-3} cm/s. Core from the Dewey Fall River sandstone unit has a horizontal hydraulic conductivity of 2.2 x 10^{-3} cm/s (6.1 ft/day). The ratio of horizontal to vertical hydraulic conductivity (K_h:K_v) for the Burdock sandstone units is 2.4:1, and for the Dewey sandstone unit it is 4.5:1, based on the core data shown in Table 6.1.

6.3 Interpretations of the Laboratory Core Data

Comparison of horizontal hydraulic conductivity of the Dewey and Burdock sandstone samples in Table 6.1 with the conductivity calculated from pumping test transmissivity (Tables 4.3 and 5.3) can be made as follows:

- Dewey Transmissivity 255 ft^2/d divided by 15 ft screen length = 17 ft/day
- Dewey Transmissivity 255 ft^2/d divided by 165 ft formation thickness = 1.5 ft/day
- Burdock Transmissivity 150 ft^2/d divided by 10 ft screen length = 15.0 ft/day
- Burdock Transmissivity 150 ft^2/d divided by 170 ft formation thickness = 0.9 ft/day

The most commonly used procedure when converting test results is to use the screen length of the pumping well as the divisor. The above analysis indicates that the pumping test data may be interpreted to yield up to two to three times greater higher hydraulic conductivity than core data.

However, the above analysis also indicates that the hydraulic conductivities calculated from the pumping test transmissivities and the overall formation thicknesses bracket the core data at the lower end of ranges in hydraulic conductivity, with the core falling in the middle of the range. The core data can be considered to be generally consistent with, and therefore independently confirming, the pumping test results. Generally, the above ranges in calculated hydraulic conductivity also indicate order-of-magnitude uncertainty (generally, about one to 17 ft/day),

Powertech reports that the laboratory would not take samples containing uranium, so sandstone core samples from outside of the ore zone were submitted. The electric logs and boring lithologic logs indicate that the core samples were taken from sandstone layers which may have

had slightly different, possibly less permeable, ideologies than the screened intervals used for the pumping tests in the ore zones.

6.4 Conclusions

The first conclusion from the core analyses is that the major shale aquitards (Fuson, Skull Creek, Morrison formations) have hydraulic conductivities several orders of magnitude lower than hydraulic conductivities of either the Fall River or Lakota sandstone units. Using the vertical hydraulic conductivities as a measure of degree of confinement, at the Burdock project area Table 6.1 indicates that the shales in the Fuson overlying the Lakota formation (K_h = 7.4 ft/day) have an average vertical permeability of about 2.7 x 10^{-4} ft/day and the underlying Morrison formation 6.0 x 10^{-5} ft/day. At the Dewey project area, shales in the Fuson formation underlying the Fall River formation (Kh = 6.6 ft/day) have an average vertical permeability of 1.8 x 10^{-5} ft/day, and shale in the single sample of overlying Skull Creek shale has a vertical permeability of 1.5 x 10^{-5} ft/day.

The second conclusion is that core data from the sandstones are within the range of hydraulic conductivities determinable from test transmissivities, specifically 1.5 to 17 ft/day at the Dewey project area and 0.9 to 15 ft/day at the Burdock project area. This is also an appropriate range of uncertainty for converting the test results to hydraulic conductivity. Using the usual procedure for determining hydraulic conductivity from pumping test transmissivity, the sandstone core results may have two to three times smaller hydraulic conductivities than those estimated from the pumping tests, perhaps due to slightly different lithologies between the core and screened intervals. Overall, there is reasonable agreement between the laboratory and field hydraulic tests considering typically order-of-magnitude differences in hydraulic conductivity determinations.

7.0 Summary and Conclusions

The following sections first summarize new facts about the Dewey and Burdock project areas based on the 2008 tests and related information. A discussion of the results in comparison to the 1979 to 1982 TVA pumping tests follows. The Burdock site is discussed first because comparison with the TVA tests is most straightforward.

7.1 Burdock Project Area

7.1.1 Summary

A summary of aquifer parameters for the 2008 Burdock pumping test and related laboratory core testing is as follows:

- Nine determinations of transmissivity (Table 5.3) ranged from 120 to 223 ft^2/day with the median value of 150 ft^2/day.
- Four storativity determinations (Table 5.3) ranged from 6.8×10^{-5} to 1.9×10^{-4} with the median value of 1.2×10^{-4}.
- The radius of influence of the pumping test determined by a distance-drawdown plot was 2,100 ft (Section 5.3.3).
- The pumping well in the lower Lakota formation was determined to be moderately efficient: 80 to 83 percent by the empirical distance-drawdown method and 65 percent the USGS (Halford and Kuniansky, 2002) theoretical method.
- Laboratory measurements of horizontal and vertical hydraulic conductivity (Table 6.1) were made on sandstone layers similar to that tested in the pumping test; measured horizontal hydraulic conductivity ranged from 5.9 to 9.1 ft/day, the mean value was 7.4 ft/day and the mean ratio of horizontal to vertical hydraulic conductivity in Burdock area sandstone was 2.47:1
- Laboratory measurements of horizontal and vertical hydraulic conductivity (Table 6.1) were made on shale layers from the two major confining units for the Lakota formation in the pumping test area with the following results:
  - Fuson Shale: the laboratory core data indicate vertical permeabilities of about 2×10^{-7} to 1×10^{-8} cm/sec (average 2.7×10^{-4} ft/day) for shale samples from within the Fuson member overlying the Lakota formation.
  - Morrison Shale: the laboratory core data for the shales in the underlying Morrison formation indicate vertical permeabilities of 9×10^{-9} to 3×10^{-8} cm/sec (average 6.0×10^{-5} ft/day).

- The range of hydraulic conductivities determinable from test transmissivities (Section 6.3) was 0.9 to 15.0 ft/day, which is considered an appropriate range that is also verified by the sandstone core sample results falling in the middle of the range; it is noted that the lower end of the hydraulic conductivity range is probably appropriate for use with the entire formation thickness (shale layers included) and the upper end represents the most permeable sandstone layers such as the ore zone areas tested in the pumping test.

7.1.2 Conclusions

The Burdock pumping test in 2008 may be directly compared to the 1979 TVA test for the Lakota (Chilson) aquifer as the tests were nearly at the same location (Figure 1.1). The average transmissivity and storativity values determined from the TVA tests were 190 ft^2/d and 1.8×10^{-4} (Section 2.3, see p. 17 in Boggs and Jenkins, 1980). Comparing median transmissivity of 150 ft^2/d and storativity of 1.2×10^{-4}determined in the 2008 test (Section 5.4.4) to the TVA test, the new aquifer parameters for the lower Lakota are respectively about 80 and 70 percent of the 1979 results. Because transmissivity and storativity depend on aquifer thickness, comparing the results suggests that there may be some scaling effect between the tests due to the differing lengths of screened intervals.

Therefore, the 1979 TVA test is transmissivity of 190 ft^2/d is considered representative of the entire Lakota aquifer for a regional application, such as groundwater flow model where an average hydraulic conductivity of about 1 ft/day over a thickness of 170 ft could be specified. The 2008 test provides specific data at the operational-scale of a prospective ISR well field where local hydraulic conductivities of up to 15 ft/day could be specified for the most permeable ore zones horizons.

Within the Lakota formation, vertical communication throughout the entire formation is indicated by the delayed response at the upper Lakota observation well (11-19). The 160-minute delay in response at the upper Lakota observation well 11-19 is attributed to lateral and vertical anisotropy due to the shale interbeds seen on the conceptual stratigraphic cross-sections for the pumping test site (Drawings 5.1, 5.2 and 5.3). The extent and continuity of the shale interbeds are unknown. Whether the shale interbeds in the Lakota aquifer are sufficiently thick and continuous to serve as vertical confinement for ISR operations will probably need to be evaluated by analyzing cores from borings as well fields are drilled.

The 2008 test indicates that the lower and upper portions of the Lakota formation behave as a single, confined, leaky aquifer. Confinement and leakage from the overlying Fuson member is

evident in the matches to the Hantush-Jacob type curves seen most clearly at observation wells 11-14C and 11-2. These results are more definitive than the 1979 TVA test where confined, leaky behavior for the Lakota was predicted but not demonstrated with curve match results. Hydraulic communication through the Fuson member between the Lakota and Fall River aquifers is evidenced by the drawdown at the Fall River observation well 11-17, indicating that leakage was established through underlying the Fuson formation.

The laboratory core data indicate an average vertical permeability of 9.3×10^{-8} (2.7×10^{-4} ft/day) for shale samples from within the Fuson member. The shale core permeability values are about one to two orders of magnitude less permeable than pumping test values determined in the 1979 TVA test at Burdock, where the vertical hydraulic conductivity of the Fuson aquitard was calculated using the Neuman-Witherspoon ratio method to be about 10^{-3} ft/day (see page i in Boggs and Jenkins, 1980).

As described in Section 5.1, the potentiometric surface in the Fall River aquifer is close to that in the Lakota aquifer at the Burdock pumping test site, indicating some local connection between the two formations through the intervening Fuson member. In other locations in the Inyan Kara, the Fuson member is known to have sandstone layers that are downcut into the Lakota member (Gott et al., 1974). Therefore, determining the degree of vertical confinement for ISR operations by the Fuson will probably need to be evaluated by analyzing cores from borings as well fields are drilled, and with well field-scale pumping tests that are proposed to be conducted prior to startup of each particular mine unit.

The aquifer tests in 1979 and 2008 indicate that the Lakota Formation is a confined aquifer with a leaky confining layer, which is demonstrably the Fuson member. The laboratory core data for the shales in the underlying Morrison formation indicate an average vertical permeability of 2.1×10^{-8} cm/sec (6×10^{-5} ft/day). Together with the pumping test data, the core data indicate that the underlying Morrison formation and overlying Fuson member can serve as aquitards for ISR operations.

For the Lakota sandstone, the laboratory core data indicate an average horizontal hydraulic conductivity of 7 ft/day, and as high as 9.1 ft/day. Interpretation of the test results calculates that horizontal permeability may be as great as 15 ft/day throughout one of the ore zones. Within the lower Lakota formation, the test results indicate transmissive response between pumping and observation wells up to 250 ft apart with 17 ft of drawdown. Response was nearly 3 ft of

drawdown at 1,290 ft distance. This indicates the aquifer was stressed to produce good quality analytical results.

7.2 Dewey Project Area

7.2.1 Summary

A summary of aquifer parameters for the 2008 Dewey pumping test and related laboratory core testing is as follows:

- Ten determinations of transmissivity (Table 4.3) ranged from 180 to 330 ft^2/day with the median value of 255 ft^2/day.
- Five storativity determinations (Table 4.3) ranged from 2.3×10^{-5} to 2.0×10^{-4} with the median value of 4.6×10^{-5}.
- The radius of influence of the pumping test determined by a distance-drawdown plot was 5,700 ft (Section 4.4.3).
- The pumping well in the Fall River formation was determined to be highly efficient: 93 to 95 percent by the empirical distance-drawdown method and 81 percent the USGS (Halford and Kuniansky, 2002) theoretical method.
- Laboratory measurements of horizontal and vertical hydraulic conductivity (Table 6.1) were made in a core sample from the sandstone layer similar to that tested in the pumping test; measured horizontal hydraulic conductivity was 6.1 ft/day, and the ratio of horizontal to vertical hydraulic conductivity was 4.5:1.
- Laboratory measurements of horizontal and vertical hydraulic conductivity (Table 6.1) were made on shale samples from the two major confining units overlying and underlying the pumping test area with the following results:
  - Skull Creek shale: laboratory core data for the shale sample from the overlying Skull Creek formation indicate a vertical permeability of 5.4×10^{-9} cm/sec (1.5×10^{-5} ft/day).
  - Fuson Formation: laboratory core data for the shale sample from the underlying Fuson formation indicate a vertical permeability of 6.2×10^{-9} cm/sec (1.8×10^{-5} ft/day).

7.2.2 Conclusions

The Dewey pumping test in 2008 in the Fall River aquifer is not directly comparable to the 1982 TVA test because the underlying Lakota aquifer was tested in 1982. As demonstrated above for the Lakota aquifer (Section 7.1), a scaling effect may be assumed between total formation transmissivity and storativity (i.e., regional-scale) and the 2008 operational-scale test.

However, there are several lines of evidence that the 2008 test transmissivity and storativity results are representative of the entire Fall River aquifer at the Dewey test site, as follows:

1. Thickness of the sandstone layer screened by the pumping well is about one-half the total formation thickness as shown in Drawings 4.1 and 4.2.

2. Response at the stock tank well (GW-49 at 1,400 ft distance) was within the acceptable range for a confined aquifer; this is interpreted to indicate that the effects of partial penetration (due to elevation differences between the pumping well screen and the observation well open to the upper half of the aquifer) were diminished at the 1,400 ft distance and 40 minute response time.

3. The delay in response at the upper Fall River observation well 32-9C was a relatively brief 11 minutes (Table 4.2), compared to 160 minutes in the Burdock test; together with (2) above, these responses suggest that the vertical anisotropy due to shale interbeds overlying the lower sandstone layer does not extend laterally for more than about 1,400 ft.

The 2008 test indicates that the lower and upper sandstone portions of the Fall River formation behave as a single, confined, aquifer with some form of lateral barrier due changing lithology, such as a channel boundary. The TVA test in 1982 observed a barrier boundary in the underlying Lakota formation which was attributed to either a change in lithology or the Dewey Fault zone. Apparently, both the Lakota and Fall River formations in the general Dewey project area are highly transmissive and show barrier boundaries. These test results are more definitive than the 1982 TVA test concerning the proximity of the barrier boundary, because the 2008 radius of influence was about one mile compared to greater than two to three miles distance to the fault zone.

Vertical communication throughout the entire Fall River formation is indicated by the delayed response at the upper Fall River observation well (32-9C). Within the Fall River formation, the 11-minute delay in response at the upper observation well is attributed to lateral and vertical anisotropy due to the shale interbeds seen on the conceptual stratigraphic cross-sections for the pumping test site (Drawings 4.1 and 4.2). The extent and continuity of the shale interbeds are not known. Whether the shale interbeds in the Fall River aquifer are sufficiently thick and continuous to serve as vertical confinement for ISR operations will need to be evaluated by analyzing cores from borings as well fields are drilled.

Leakage from a confining layer, presumably the Fuson member, was observed in the 1982 TVA test of the Lakota formation. However, the leakage was observed only relatively late in the TVA tests, at 3,000 to 10,000 minutes, with a much greater pumping rate (495 gpm) and radius of influence. The large-scale vertical hydraulic conductivity value of 2×10^{-4} ft/day (7.1×10^{-8} cm/sec) determined in the 1982 TVA regional test at Dewey using the Neuman-Witherspoon ratio method is sufficiently impermeable to be considered an aquitard or aquiclude.

Hydraulic communication through the Fuson member between the Fall River and underlying Lakota aquifers is not indicated by the 2008 response at observation well 32-10. The 2008 test demonstrates that vertical leakage through the Fuson may not occur over a mile-wide radius. As described in Section 4.1, the Lakota and Fall River aquifers at the Dewey test site appear to be locally hydraulically isolated by the intervening Fuson member with nearly 40 ft head difference. The laboratory core data indicate a very low vertical permeability of 6.2×10^{-9} cm/sec (1.8×10^{-5} ft/day) for the shale sample from within the Fuson shale member.

The laboratory core data for the shale sample from the Skull Creek formation, overlying the Fall River formation, indicate a very low vertical permeability of 5.4×10^{-9} cm/sec (1.5×10^{-5} ft/day), also appropriate for an aquitard or aquiclude.

For the Fall River sandstone, the laboratory core data indicate a horizontal hydraulic conductivity of 6.1 ft/day, and interpretation of the test results calculates that horizontal permeability may be as great as 17 ft/day throughout one of the ore zones. Within the lower Fall River formation, the test results indicate transmissive, rapid response (two to three minutes) between pumping and observation wells up to 467 ft apart with nearly 10 ft of drawdown. Response was nearly 9 ft of drawdown at 1,400 ft distance. This indicates the aquifer was stressed to produce good quality analytical results.

8.0 Certification

This report "Powertech (USA) Inc., Dewey-Burdock Project, 2008 Pumping Tests: Results and Analysis" has been prepared for Powertech (USA) Inc. by Knight Piésold and Co. The material in it reflects the best judgment of Knight Piésold and Co. in light of the information available to both firms at the time of the report preparation. Any use which a third party makes of this report, or any reliance on or decisions made based on it, are the responsibility of such third parties. Knight Piésold and Co. and Powertech (USA), Inc. accept no responsibility for damages, if any, suffered by any third party as a result of decisions made or actions based on this report.

This numbered report is a controlled document. Any reproductions of this report are uncontrolled and may not be the most recent revision.

Additional specialist input was provided to the design by the following individuals: Dr. Cory Conrad, Ph.D., P.G., Dr. James R. Kunkel, Ph.D., P.E., Mr. Paul D. Bergstrom, C.E.P.

Sincerely,
Knight Piésold and Co.

Paul D. Bergstrom, C.E.P.
Associate

Cory Conrad, Ph.D, P.G.
Hydrogeologist

9.0 References

Boggs, J. M., 1983. "Hydrogeologic Investigations at Proposed Uranium Mine Near Dewey, South Dakota," Report No. WR28-2-520-109, Norris, Tennessee, October.

Boggs, J. M., and A. M. Jenkins, 1980. "Analysis of Aquifer Tests Conducted at the Proposed Burdock Uranium Mine Site: Burdock, South Dakota," Report No. WR28-1-520-109, Norris, Tennessee, May.

Driscoll, F. M., 1986. "Groundwater and Wells", Johnson Filtration Systems, Inc., St. Paul, MN, 1089 pp.

Environmental Simulations, Inc. (ESI), 2003. Software Manual for Aquifer-Win32™ Reinholds, PA. www.groundwatermodels.com

Freeze, R.A. and Cherry, J.A., 1979. Groundwater. Prentice-Hall, Inc., New Jersey, 604 p.

Gontheir, G.J, 2007. "A Graphical Method for Estimation of Barometric Efficiency from Continuous Data – Concepts and Application to a Site in the Piedmont Air Force Plant 6, Marietta, Georgia." " U.S. Geological Survey Scientific Investigations Report 2007-5111.

Gott, B.B., Wollcott, D.E., and C. G.Bowles, 1974. "Stratigraphy of the Inyan Kara Group and Localization of Uranium Deposits, Southern Black Hills, South Dakota and Wyoming," U.S. Geological Survey Professional Paper 763.

Halford, K.J., 2006, "Documentation of a Spreadsheet for Time-Series Analysis and Drawdown Estimation" U.S. Geological Survey Scientific Investigations Report 2006-5024.

Halford, K.J. and E.L. Kuniansky, 2002, "Documentation of Spreadsheets for the Analysis of Aquifer-Test and Slug-Test Data," U.S. Geological Survey Open File Report 02-197.

Hantush, M.S. and C.E. Jacob, 1955, Non-steady radial flow in an infinite leaky aquifer, Am. Geophys. Union Trans., v. 36, no. 1, p. 95-100.

Hsieh, P. E, 1997. "Poroelasticity Simulation of Ground-water Flow and Subsurface Deformation" U.S. Geological Survey Open File Report 97-47. p 5-9

Keene, J.R., 1973 "Ground-water Resopurces of the Western Half of Fall River County, S.D., Dept. of Natural Resource Development, Geological Survey, Report of Investigations 109.

Knight Piésold, 2008. Pump Test Work Plan, Dewey-Burdock In Situ Uranium Project, April 25.

Kruseman, G. P. and N. A. de Ridder, 1990. "Analysis and Evaluation of Pumping Test Data," Second Edition International Institute for Land Reclamation and Improvement (ILRI), Publication 47, Wageningen, The Netherlands.

Neuman, S.P and Witherspoon, P.A., 1973. "Field Determination of the Hydraulic Properties of Leaky Multiple Aquifer Systems". Water Resources Research, 8. p.1284-1298.

Ohio Environmental Protection Agency, 2006. Technical Guidance for Ground Water Investigations, accessed October 5, 2007, from the

Sandia Corporation, 2005. User Manual for BETCO Version 1.00, October.

Rahn, P., 1992. "Aquifer Hydraulics in a Deep Confined Cretaceous Aquifer at Wall, South Dakota". Association of Engineering Geologists, Proceedings, October 2 – 9, 1992, Los Angeles, CA, p. 409-418.

Toll, N.J. and Rasmussen, T.C., 2007. Removal of Barometric Pressure Effects and Earth Tides from Observed Water Levels., Ground Water, 45, p. 101-105.

Tables

This page intentionally left blank

Table 4.1
Powertech (USA) Inc.
Dewey-Burdock Project
2008 Pumping Tests: Results and Analysis

Dewey Pumping Test Completion Information

Well ID and Stratigraphic Interval	Well Type	Location	Radial Distance from pumping Well (ft)	Depth to top of Screen (ft bgs)	Depth to bottom of Screen (ft bgs)	Note
Ore Zone (lower Fall River Sandstone)						
DB 07-32-3C	Pumping Well	NWQ Sec. 32	0	585	600	
DB 07-32-05	Obs. Well #1	NWQ Sec. 32	265	593	608	
DB 07-32-4C	Obs. Well #2	NWQ Sec. 32	467	580	595	
DB 07-29-7	Obs. Well #3	SEQ Sec. 29	2,400	635	650	
Upper Fall River Sandstone						
DB 08-32-9C	Obs. Well	NWQ Sec. 32	41	490	505	
Lakota Sandstone Layer						
DB 08-32-10	Obs. Well	NWQ Sec. 32	61	715	730	
Unkpapa Formation						
DB 07-32-11	Obs Well	NWQ Sec. 32	50	910	930	
Additional Wells						
GW-49	Upper Fall River 70 ft	NEQ Sec. 29	1,433	475	540	Stock Well

Notes: Screen completion information from diagrams prepared by Powertech, Appendix B
Radial distance information provided by Powertech.

Table 4.2
Powertech (USA) Inc.
Dewey-Burdock Project
2008 Pumping Tests: Results and Analysis

Dewey Pumping Test Drawdown and Response Summary

Well ID and Stratigraphic Interval	Well Type	Radial Distance from pumping Well (ft)	Approximate Ground Surface Elevation (ft amsl)[1]	Approximate Groundwater Elevation (ft amsl)[2]	Note	Maximum Drawdown at 3.08 days (ft)[3]	Note	Time of First Drawdown Response (min)	Minimum Pumping Groundwater Elevation (ft amsl)	Boundary Type (days)[4]
Ore Zone (lower Fall River Sandstone)										
DB 07-32-3C	Pumping Well	0	3626.3	3643.9	A	44.8		0.0	3599.1	
DB 07-32-05	Obs. Well #1	265	3622.2	3641.0	A	13.0		1.6 to 2.4	3628.0	Barrier (0.7)
DB 07-32-4C	Obs. Well #2	467	3626.3	3644.0	A	9.8		2.8	3634.2	Barrier (0.6)
DB 07-29-7	Obs. Well #3	2,400	3662.5	3659.3		1.5	a	140 to 850	3657.8	
Upper Fall River Sandstone										
DB 08-32-9C	Obs. Well	41	3625.9	3626.3	A	10.6		11.5	3615.7	
Lakota Sandstone Layer										
DB 08-32-10	Obs. Well	61	3625.2	3682.8	A	-0.1	N	No Response	NA	
Unkpapa Formation										
DB 07-32-11	Obs Well	50	3625.2	3761.0	A	-2.0	N	No Response	NA	
Additional Wells										
GW-49	Stock Well	1,433	3628	3652	A	9.0		40	3643.0	Barrier (1.9)

Notes: Screen completion information from diagrams prepared by Powertech, Appendix A
Radial distance informationprovided by Powertech.

[1] Ground Surface Elevations from Powertech

[2] Pressure or depth to water measurements relative to ground surface, Eric Krantz, RESPEC, personal communication.

[3] From table of processed drawdown data in Appendix B, or calculated visually from WinSituTM graph and table of data in non-responding wells.

[4] Boundary time estimated based on time of deviation from Theis type curve; 0.7 days used for weighting calculations.

A Artesian pressure surface above ground level.

N N response to pumping, water level rose slightly through drawdown phase of test

[a] Drawdown continued for about 1.5 days past pump shut-down to a maximum of 2.1 ft at about 3:00 AM on May 20, 2008.

Table 4.3
Powertech (USA) Inc.
Dewey-Burdock Project
2008 Pumping Tests: Results and Analysis

Summary of Aquifer Hydraulic Characteristics for the Dewey Pumping Test

Dewey Test Site Pumping Test Interpretations

Well I.D.	Well Type	Radial Dist. (ft)	Interpretation Method	Transmissivity (ft^2/day)	u or u' (unitless)	Storativity (unitless)	Note
Ore zone (lower Fall River Sandstone)							
32-3C	Pumping	0.25 (0.33)	Theis DD[1]	250	--	1.2E-06[d]	--
			CJ DD [3]	250	<0.01	--	--
Pumping Well Efficiency = 80%[3]							
			CJ Recovery [3]	270	<0.01	--	--
32-5	Obs #1	243	Theis DD[1]	294	--	3.3E-05	--
			Theis Recovery[1]	260	<0.01	--	--
			CJ Recovery[3]	280	<0.01	--	--
32-4C	Obs #2	467	Theis DD[1]	333	--	5.6E-05	--
			CJ Recovery [3]	120[a]	<0.01	--	
29-7	Obs #3	2,400	Theis DD[2]	178	--	2.0E-04	
			CJ Recovery [3]	Insufficient recovery for analysis			--
Fall River Aquifer Stock Well (Screened in top half of Fall River)							
GW-49	Stock	1,400	Theis DD[1]	177	--	2.3E-05	--
			CJ Recovery [3]	110	<0.05	--	--
Upper Fall River Sandstone							
32-9C	Obs	41	Theis DD[1]	217	--	1.6E-02	--
			CJ Recovery [3]	150	<0.05	--	--

Table 4.3
Powertech (USA) Inc.
Dewey-Burdock Project
2008 Pumping Tests: Results and Analysis

Summary of Aquifer Hydraulic Characteristics for the Dewey Pumping Test

Dewey Test Site Pumping Test Interpretations

Well I.D.	Well Type	Radial Dist. (ft)	Interpretation Method	Transmissivity (ft^2/day)	u or u' (unitless)	Storativity (unitless)	Note
Lakota Sandstone Layer							
32-10	Obs	61	No response during pumping test.				--
Unkpapa Formation							
32-11	Obs	50	No response during pumping test.				--
Distance Drawdown (32-5, 32-4C, 29-7, GW-49)[2]				218	<0.05	4.6E-05	r^2 = 0.78 (4 point line)
Pumping Well Efficiency = 93% to 95%							--
Summary:	Median			255		4.60E-05	
	Average/Geometric Mean[4]			251		5.23E-05	

Notes/References: DD = drawdown, CJ = Cooper -Jacob, Obs = Observation Well
(1) Calculated by automated curve fitting in AquiferWin32™ software (ESI, 2003).
(2) Knight Piesold spreadsheet after methods in Driscoll (1986).
(3) Spreadsheet methods in U.S. Geol. Surv. Open File Rept. 02-197, Halford and Kuniansky (2002).
(4) Average value valculated for Transmissivity, Geometric Mean value calculated for Storativity.
(a) only slope satisfying u 'critereon occurs after intersection with barrier boundary.
(b) not accepted due to anomalous response at well, see text.
(d) storativity not valid at pumping well.
[ ] = accepted value based on conformance with theory discussed in the text.

Table 5.1
Powertech (USA) Inc.
Dewey-Burdock Project
2008 Pumping Tests: Results and Analysis

Burdock Pumping Test Completion Information

Well ID and Stratigraphic Interval	Well Type	Location	Radial Distance from pumping Well (ft)	Depth to top of Screen (ft bgs)	Depth to bottom of Screen (ft bgs)	Note
Ore Zone (lower Lakota Sandstone)						
DB 07-11-11C	Pumping Well	SWQ Sec. 11	0	426	436	
DB 07-11-15	Obs. Well #1	SWQ Sec. 11	243	418	428	
DB 07-11-14C	Obs. Well #2	SWQ Sec. 11	250	413	423	
DB 07-11-02	Obs. Well #3	NWQ Sec. 11	1,292	450	460	
Upper Lakota Sandstone						
DB 07-11-19	Obs. Well	SWQ Sec. 11	50	325	335	
Fall River (lower Sandstone layer)						
DB 07-11-17	Obs. Well	SWQ Sec. 11	50	245	255	
Unkpapa Formation						
DB07-11-18	Obs Well	SWQ Sec. 11	<100	621	631	
Additional Distant Wells						
	None					

Table 5.2
Powertech (USA) Inc.
Dewey-Burdock Project
2008 Pumping Tests: Results and Analysis

Burdock Pumping Test Drawdown and Response Summary

Well ID and Stratigraphic Interval	Well Type	Radial Distance from pumping Well (ft)	Approximate Ground Surface Elevation (ft amsl)[1]	Approximate Groundwater Elevation (ft amsl)[2]	Note	Maximum Drawdown at 3.0 days (ft)[3]	Note	Time of First Drawdown Response (min)	Minimum Pumping Groundwater Elevation (ft amsl)	Boundary Type (days)[4]
Ore Zone (lower Lakota Sandstone)										
DB 07-11-11C	Pumping Well	0	3700.5	NA		91.1		0.0	3529	
DB 07-11-15	Obs. Well #1	243	3691.5	3660.2		10.4		140.2	3649.8	
DB 07-11-14C	Obs. Well #2	250	3688.4	3660.9		17.0		3.6	3643.9	Recharge (1.1)
DB 07-11-02	Obs. Well #3	1,292	3717.9	3664.8		3.1		280	3661.7	Recharge (1.8)
Upper Lakota Sandstone										
DB 07-11-19	Obs. Well	50	3701.7	3662.1		3.4		160	3658.7	
Fall River (lower Sandstone layer)										
DB 07-11-17	Obs. Well	50	3700.1	3660.3		2.1	a	see note b	3657.2	
Unkpapa Formation										
DB07-11-18	Obs Well	35	3699.2	3728.4	A	-0.5	N	No Response	NA	
Additional Wells										
None										

Notes: Radial distance information from Autocad drawing provided by Powertech.

[1] Ground Surface Elevations from Powertech
[2] Pressure or depth to water measurements relative to ground surface, Eric Krantz, RESPEC, personal communication.
[3] From table of processed drawdown data in Appendix B, or calculated from WinSitu™ graph and table of data in non-responding wells.
[4] Boundary time estimated based on time of deviation from Theis type curve; shortest time used for weighting calculations.
A Artesian pressure surface above ground level.
N N response to pumping, water level rose slightly through drawdown phase of test
(a)Drawdown continued for about 1 day past pump shut-down to a maximum of 3.1 ft at about 5:00 PM, May 22, 2008.
(b)First response was a 0.23 ft rise in water levels peaking at about 12:00 AM on May 19, 2008, interpreted as a possible Noordbergum effect.

Table 5.3
Powertech (USA) Inc.
Dewey-Burdock Project
2008 Pumping Tests: Results and Analysis

Summary of Aquifer Hydraulic Characteristics for the Burdock Pumping Test

Burdock Project Pumping Test Interpretations

Well I.D.	Well Type	Radial Dist. (ft)	Interpretation Method	Transmissivity (ft^2/day)	u or u' (unitless)	Storativity (unitless)	Note
Ore zone (lower Lakota Sandstone)							
11-11C	Pumping	0.25 (0.33)	Theis DD[1]	145	--	2.9E-09[a]	--
			CJ DD [3]	150	<0.01	--	--
Pumping Well Efficiency = 65%[3]							
			CJ Recovery [3]	140	<0.01	--	--
11-15	Obs #1	243	Theis DD[1]	67	--	1.3E-03	--
			CJ Recovery [3]	100	<0.1	--	--
11-14C	Obs #2	250	Theis DD[1]	128	--	6.8E-05	--
			H-J DD[1]	120	--	6.9E-05	--
			Theis Recovery[1]	174	<0.01	--	--
			CJ Recovery [3]	160	<0.01	--	--
11-02	Obs #3	1,292	Theis DD[1]	223	--	1.9E-04	--
			H-J DD[1]	185	--	1.7E-04	--
			CJ Recovery [3]	260	<0.15	--	--
Upper Lakota Sandstone							
11-19	Obs	50	Theis DD[2]	260	--	1.0E-01	--
			CJ Recovery [3]	190	<0.15	--	--
Fall River (lower sandstone layer)							
11-17	Obs	50	Noordbergum Effect and response cannot be interpreted analytically				

Table 5.3
Powertech (USA) Inc.
Dewey-Burdock Project
2008 Pumping Tests: Results and Analysis

Summary of Aquifer Hydraulic Characteristics for the Burdock Pumping Test

Burdock Project Pumping Test Interpretations

Well I.D.	Well Type	Radial Dist. (ft)	Interpretation Method	Transmissivity (ft^2/day)	u or u' (unitless)	Storativity (unitless)	Note
Unkpapa Formation							
11-18	Obs	35	No response during pumping test.				--
Distance Drawdown (11-14C, 11-15, 11-02)[2]				145	<0.08	2.2E-04	r^2 = 0.76 (3 point line)
Pumping Well Efficiency = 61% to 63%							
Summary:	Median			150		1.20E-04	
	Average/Geometric Mean[5]			158		1.12E-04	
	TVA[4]			190		1.8E-04	

Notes/References: DD = drawdown, CJ = Cooper-Jacob, HJ = Hantush-Jacob, Obs = Observation Well
(1) Calculated by automated curve fitting in AquiferWin32™ software (ESI, 2003).
(2) Knight Piesold spreadsheet after methods in Driscoll (1986).
(3) Spreadsheet methods in U.S. Geol. Surv. Open File Rept. 02-197, Halford and Kuniansky (2002).
(4) Summary values from p. 17 in Boggs and Jenkins (1980).
(5) Average value valculated for Transmissivity, Geometric Mean value calculated for Storativity.
(a) storativity not valid at pumping well.
(b) based on 6 inch casing (8 inch borehole).
[ ] = accepted value based on conformance with theory discussed in the text.

Table 6.1
Powertech (USA) Inc.
Dewey-Burdock Project
2008 Pumping Tests: Results and Analysis

Laboratory Core Analyses for Powertech USA Inc. at Dewey-Burdock Site

Sample Number	Depth (ft)	Confining Stress (psig)	Porosity (%)	Air Intrinsic Permeability[1] k_a (mD)	Particle Density (g/cm^3)	Notes	Water Hydraulic Conductivity[2][3] K_w (cm/s)	Core K_h (ft/day)	Core K_v (ft/day)
DB 07-11-11C	**Burdock**								
1H	252.20	600	10.50	1.040	2.356	Fuson Shale	8.0073E-07		
1V	252.35	600	10.15	0.228	2.356	Fuson Shale	1.7555E-07		
4H	412.30	600	9.68	0.041	2.511	Fuson Shale	3.1567E-08		
4V	412.45	600	9.59	0.015	2.514	Fuson Shale	1.1549E-08		
DB 07-29-1C	**Dewey**								
2H	480.70	600	8.90	0.078	2.613	Skull Creek shale	6.0055E-08		
2V	480.80	600	9.30	0.007	2.610	Skull Creek shale	5.3896E-09		
3H	609.10	600	12.26	0.073	2.603	Fuson Shale	5.6205E-08		
3V	609.10	600	10.84	0.008	2.793	Fuson Shale	6.1595E-09		
DB 07-11-14C	**Burdock**								
5H	423.60	600	29.56	3,207	2.645	Lakota Sand	2.4692E-03	7.0	
5V	423.35	600	30.34	1,464	2.645	Lakota Sand	1.1272E-03		3.2
6H	430.20	600	31.90	4,161	2.640	Lakota Sand	3.2037E-03	9.1	
6V	430.35	600	30.16	939	2.646	Lakota Sand	7.2297E-04		2.1
7H	453.50	600	10.86	1.000	2.519	Morrison Shale	7.6994E-07		
7V	453.45	600	11.82	0.043	2.543	Morrison Shale	3.3107E-08		

Table 6.1
Powertech (USA) Inc.
Dewey-Burdock Project
2008 Pumping Tests: Results and Analysis

Laboratory Core Analyses for Powertech USA Inc. at Dewey-Burdock Site

Sample Number	Depth (ft)	Confining Stress (psig)	Porosity (%)	Air Intrinsic Permeability[1] k_a (mD)	Particle Density (g/cm^3)	Notes	Water Hydraulic Conductivity[2][3] K_w (cm/s)	Core K_h (ft/day)	Core K_v (ft/day)
DB-07-11-16C	**Burdock**								
8H	420.40	600	30.50	2,697	2.643	Lakota Sand	2.0765E-03	5.9	
8V	420.10	600	30.17	1,750	2.651	Lakota Sand	1.3474E-03		3.8
9H	455.90	600	6.99	0.004	2.536	Morrison Shale	3.0797E-09		
9V	455.45	600	7.65	0.012	2.556	Morrison Shale	9.2392E-09		
10H	503.30	600	12.96	0.697	2.474	Morrison Shale	5.3665E-07		
10V	503.45	600	No data						
DB 07-32-4C	**Dewey**								
11H	573.25	600	29.15	2,802	2.641	Fall River Sand	2.1574E-03	6.1	
11V	573.40	600	29.04	619	2.645	Fall River Sand	4.7659E-04		1.4
Summary									
Average Lakota Sand K_h, K_v								7.4	3.0
Average Lakota Sand K_h/K_v								2.42	
Fall River Sand K_h, K_v								6.1	1.4
Fall River Sand K_h/K_v								4.53	
Dewey Skull Creek Shale K_h							6.01E-08	1.71E-04	
Dewey Skull Creek Shale K_v							5.39E-09		1.54E-05
Dewey Skull Creek Shale K_h/K_v							11.14		

Table 6.1
Powertech (USA) Inc.
Dewey-Burdock Project
2008 Pumping Tests: Results and Analysis

Laboratory Core Analyses for Powertech USA Inc. at Dewey-Burdock Site

Sample Number	Depth (ft)	Confining Stress (psig)	Porosity (%)	Air Intrinsic Permeability[1] k_a (mD)	Particle Density (g/cm^3)	Notes	Water Hydraulic Conductivity[2][3] K_w (cm/s)	Core K_h (ft/day)	Core K_v (ft/day)
Average Burdock Fuson Shale K_h							4.16E-07	1.19E-03	
Average Burdock Fuson Shale K_v							9.35E-08		2.67E-04
Average Burdock Fuson Shale K_h/K_v							4.45		
Dewey Fuson Shale K_h							5.62E-08	1.60E-04	
Dewey Fuson Shale K_v							6.16E-09		1.76E-05
Dewey Fuson Shale K_h/K_v							9.13		
Average Burdock Morrison Shale K_h							4.37E-07	1.24E-03	
Average Burdock Morrison Shale K_v							2.12E-08		6.03E-05
Average Burdock Morrison Shale K_h/K_v							20.62		

Notes:

(1) Assumed air temperature = 70°F.

(2) Assumed water temperature = 52.8°F, water density = 0.999548 g/cm^3, and water dynamic viscosity = 0.012570 g/cm-s.

(3) $K_w = k_a \times (\rho_w g/\mu_w)$, and 1.0 mD = 0.987 x 10^{-11} cm^2

Constants: At 52.8 °F Water (11.5 °C)

Density = 0.999548 g/cm^3

Dynamic Viscosity = '0.01257 g/cm-s

1 mD = 9.87E-12 cm^2

gravity = 981 cm/s^2

This page intentionally left blank

Figures

This page intentionally left blank

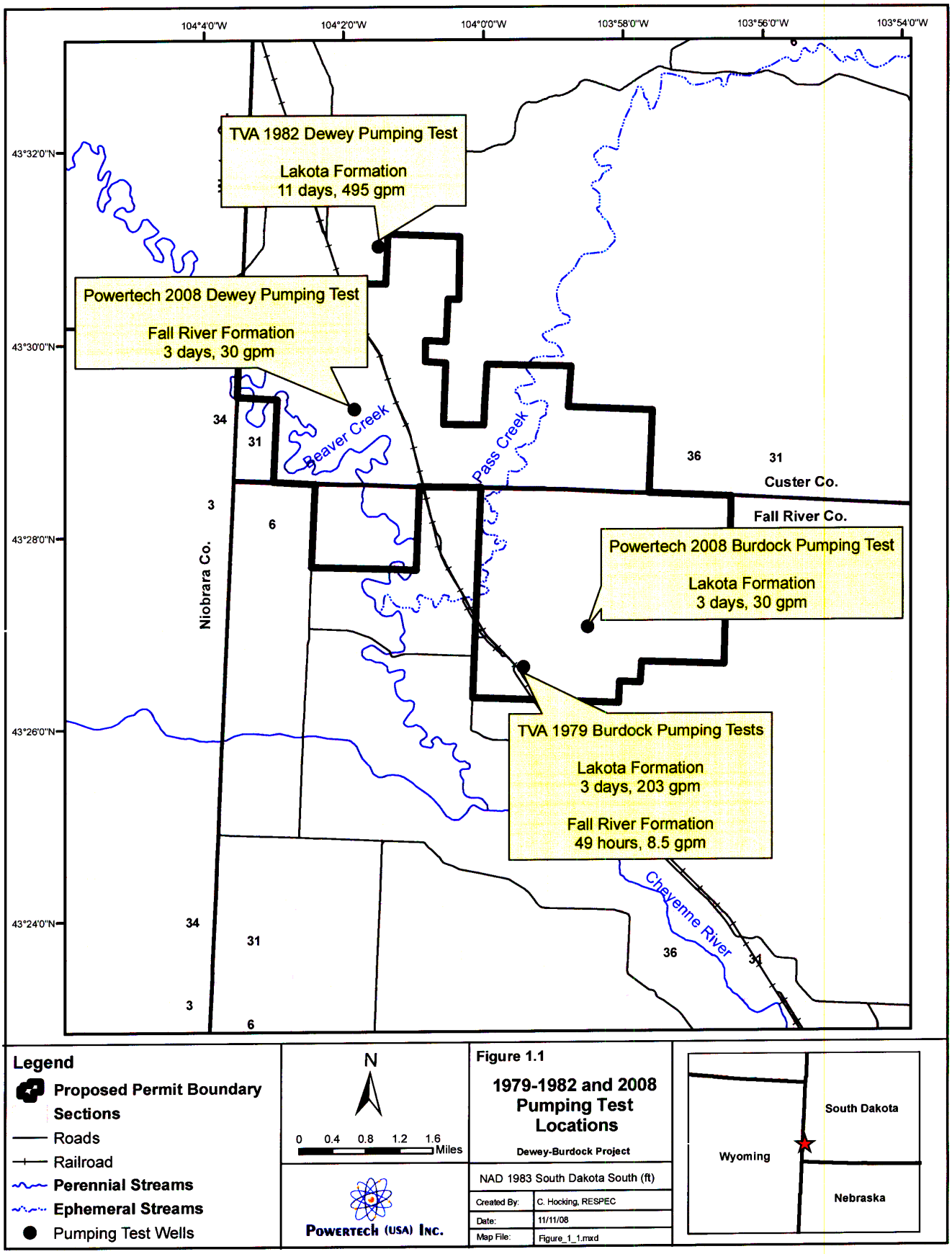
104°4'0"W
104°2'0"W
104°0'0"W
103°58'0"W
103°56'0"W
103°54'0"W
43°32'0"N
43°30'0"N
43°28'0"N
43°26'0"N
43°24'0"N
TVA 1982 Dewey Pumping Test
Lakota Formation
11 days, 495 gpm
Powertech 2008 Dewey Pumping Test
Fall River Formation
3 days, 30 gpm
Powertech 2008 Burdock Pumping Test
Lakota Formation
3 days, 30 gpm
TVA 1979 Burdock Pumping Tests
Lakota Formation
3 days, 203 gpm
Fall River Formation
49 hours, 8.5 gpm
Beaver Creek
Pass Creek
Cheyenne River
Niobrara Co.
Custer Co.
Fall River Co.
34
31
3
6
36
31
34
31
3
6
36
31
Legend
Proposed Permit Boundary
Sections
Roads
Railroad
Perennial Streams
Ephemeral Streams
Pumping Test Wells
N
0 0.4 0.8 1.2 1.6 Miles
Powertech (USA) Inc.
Figure 1.1
1979-1982 and 2008 Pumping Test Locations
Dewey-Burdock Project
NAD 1983 South Dakota South (ft)
Created By: C. Hocking, RESPEC
Date: 11/11/08
Map File: Figure_1_1.mxd
South Dakota
Wyoming
Nebraska

PERIOD	FORMATION	Sym-bol	COLUMN	LITHOLOGIC DESCRIPTION	Thickness	CORRELATION
Tertiary	White River Fm.	Twr		Volcanic Ash	0-500 ft	
Cretaceous	Pierre Fm.	Kp		Dark Gray Shale, weather brown fossiliferous	0-1000 ft	
	Niobrara Fm.	Kn		Gray calcareous shale weathers yellow	0-225 ft	
	Carlile Fm.	Kcr		Gray shale w/ thin ss beds	0-540 ft	
	Greenhorn LS	Kg		Thin bed hard limestone, fossiliferous	0-50 ft	
	Belle Fourche Fm. Mowry Shale Newcastle SS Skull Creek Sh	Kgs		Lt gy shale, bentonite w/concretions Thin brn -yellow ss Black carbonaceous sh	0-870 ft	
	Fall River Fm.	Kfr		Interbed red-brn massive ss and carbonaceous shale	30-165 ft	Uranium Zone
	Fuson Sh.			Gy-purple sh, bentonite, concretions	0-160 ft	
	Minnewasta LS			Lt gy massive ls	0-25 ft	
	Lakota Fm.	Klk		Coarse massive ss buff-gray coal near base	130-230 ft	Uranium Zone
Jurassic	Morison Fm.	Jm		Green maroon sh	0-125 ft	
	Unkapa Fm	Ju		fine gr massive ss	0-240 ft	
	Sundance Fm	Jsd		red ss interbeds and red to green marine sh	250-450 ft	

Client	Project	Title	
Knight Piésold CONSULTING	DEWEY-BURDOCK HYDROGEOLOGIC TESTING REPORT	Site Stratigraphy	
	Project No: DV10200279.01	Date: 11/12/08	Figure 2.1

G:\102\00279.01\A\Reports Specs\KP\All Reports\Work in Progress\Hydrogeologic Testing Report\Figures\Figure 2_1 Site Stratigraphy.xls 11/12/2008

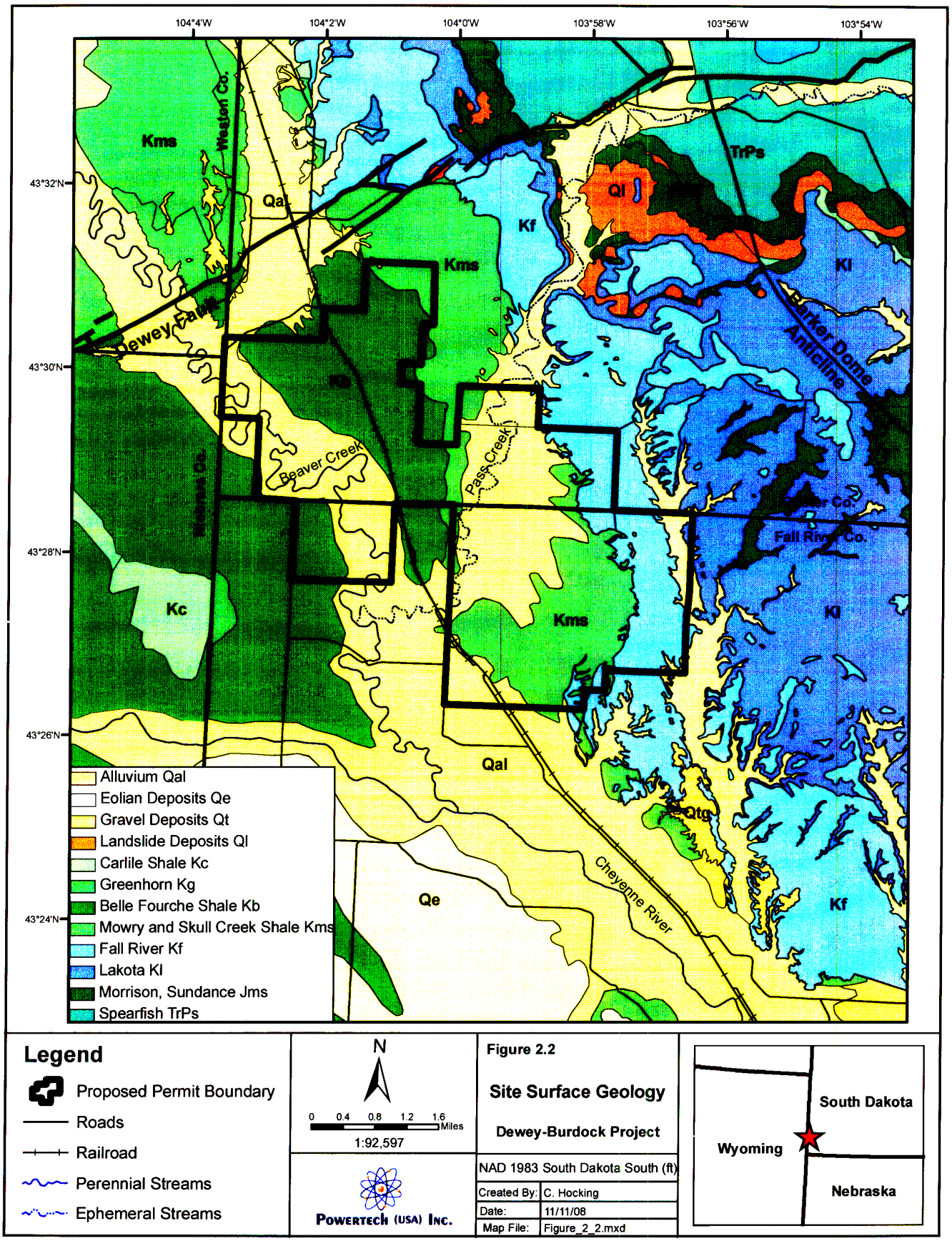

Legend

- Proposed Permit Boundary
- Roads
- Railroad
- Perennial Streams
- Ephemeral Streams

N

0 0.4 0.8 1.2 1.6 Miles

1:92,597

POWERTECH (USA) INC.

Figure 2.2

Site Surface Geology

Dewey-Burdock Project

NAD 1983 South Dakota South (ft)

Created By:	C. Hocking
Date:	11/11/08
Map File:	Figure_2_2.mxd

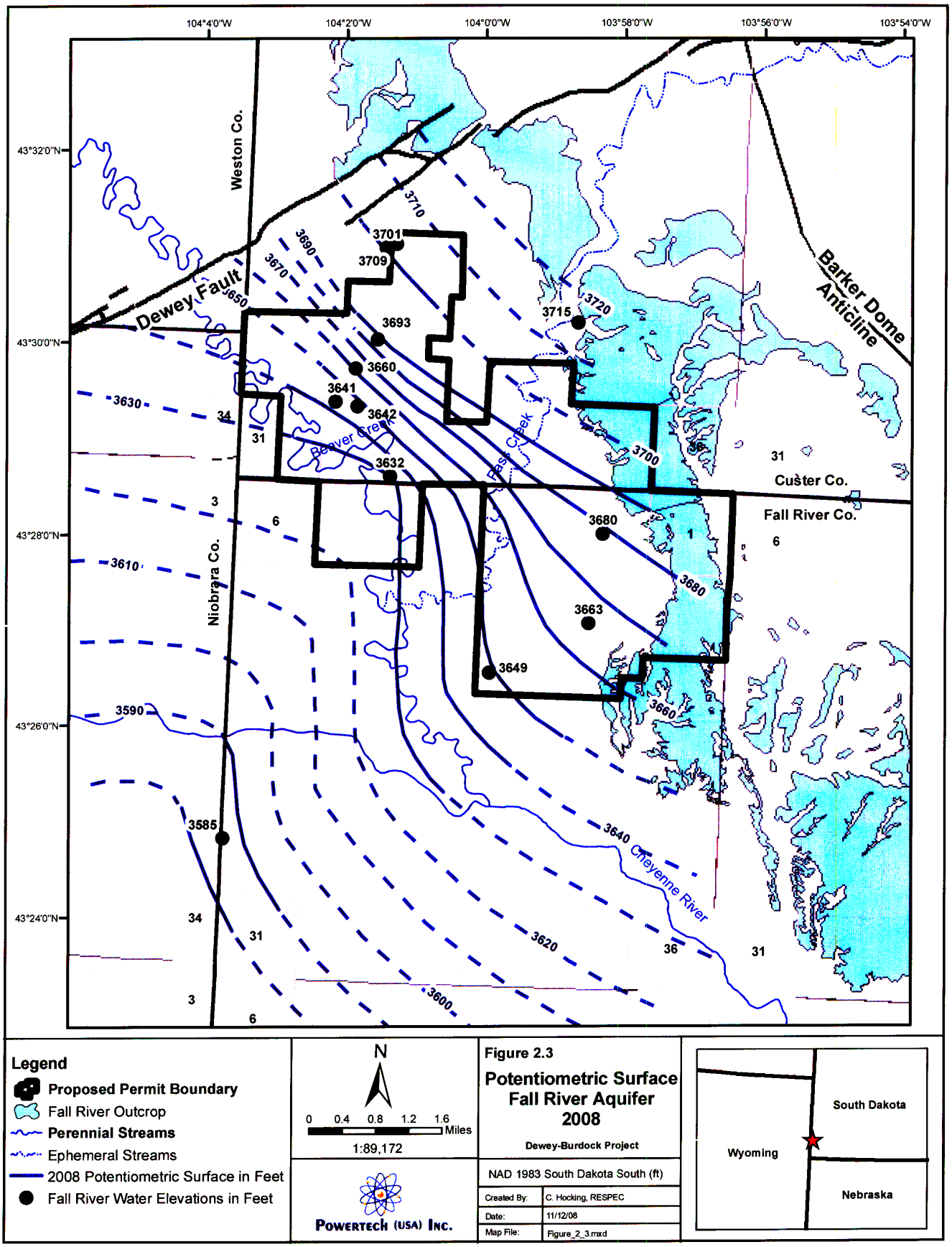
104°4'0"W
104°2'0"W
104°0'0"W
103°58'0"W
103°56'0"W
103°54'0"W
43°32'0"N
43°30'0"N
43°28'0"N
43°26'0"N
43°24'0"N
Weston Co.
Niobrara Co.
Custer Co.
Fall River Co.
Dewey Fault
Barker Dome Anticline
Beaver Creek
Pete Creek
Cheyenne River
3710
3690
3670
3650
3630
3610
3590
3640
3620
3600
3660
3680
3700
3720
3701
3709
3693
3660
3641
3642
3632
3715
3680
3663
3649
3585
34
31
3
6
36
1
Legend
Proposed Permit Boundary
Fall River Outcrop
Perennial Streams
Ephemeral Streams
2008 Potentiometric Surface in Feet
Fall River Water Elevations in Feet
N
0 0.4 0.8 1.2 1.6 Miles
1:89,172
POWERTECH (USA) INC.
Figure 2.3
Potentiometric Surface
Fall River Aquifer
2008
Dewey-Burdock Project
NAD 1983 South Dakota South (ft)
Created By: C. Hocking, RESPEC
Date: 11/12/08
Map File: Figure_2_3.mxd
South Dakota
Wyoming
Nebraska

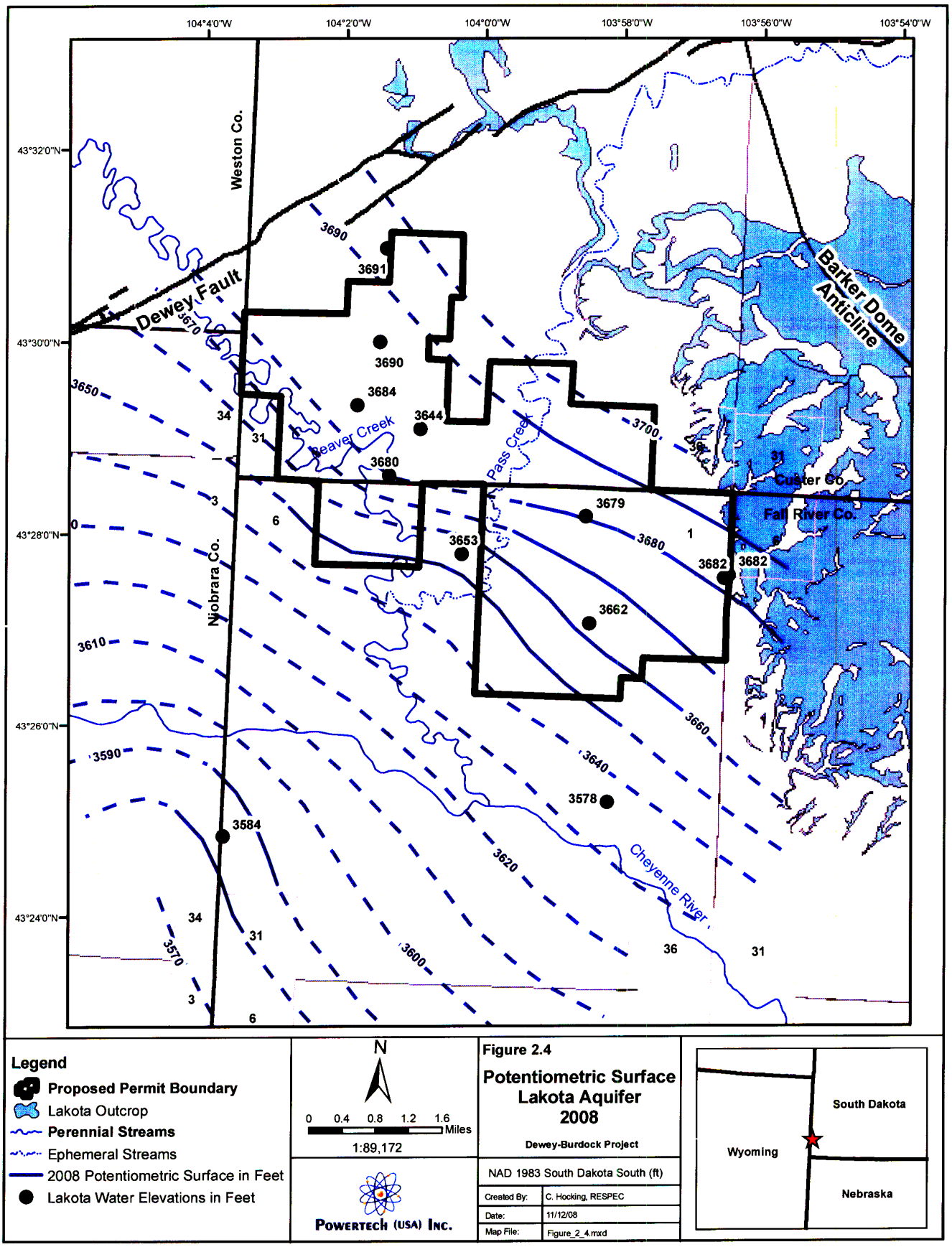
104°4'0"W
104°2'0"W
104°0'0"W
103°58'0"W
103°56'0"W
103°54'0"W
43°32'0"N
43°30'0"N
43°28'0"N
43°26'0"N
43°24'0"N
Weston Co.
Niobrara Co.
Custer Co.
Fall River Co.
Dewey Fault
Barker Dome Anticline
Beaver Creek
Pass Creek
Cheyenne River
3690
3670
3650
3700
3680
3660
3640
3620
3610
3600
3590
3570
3691
3690
3684
3644
3680
3679
3653
3682
3682
3662
3578
3584
34
31
36
31
3
6
0
1
Legend
Proposed Permit Boundary
Lakota Outcrop
Perennial Streams
Ephemeral Streams
2008 Potentiometric Surface in Feet
Lakota Water Elevations in Feet
N
0 0.4 0.8 1.2 1.6 Miles
1:89,172
POWERTECH (USA) INC.
Figure 2.4
Potentiometric Surface
Lakota Aquifer
2008
Dewey-Burdock Project
NAD 1983 South Dakota South (ft)
Created By: C. Hocking, RESPEC
Date: 11/12/08
Map File: Figure_2_4.mxd
South Dakota
Wyoming
Nebraska

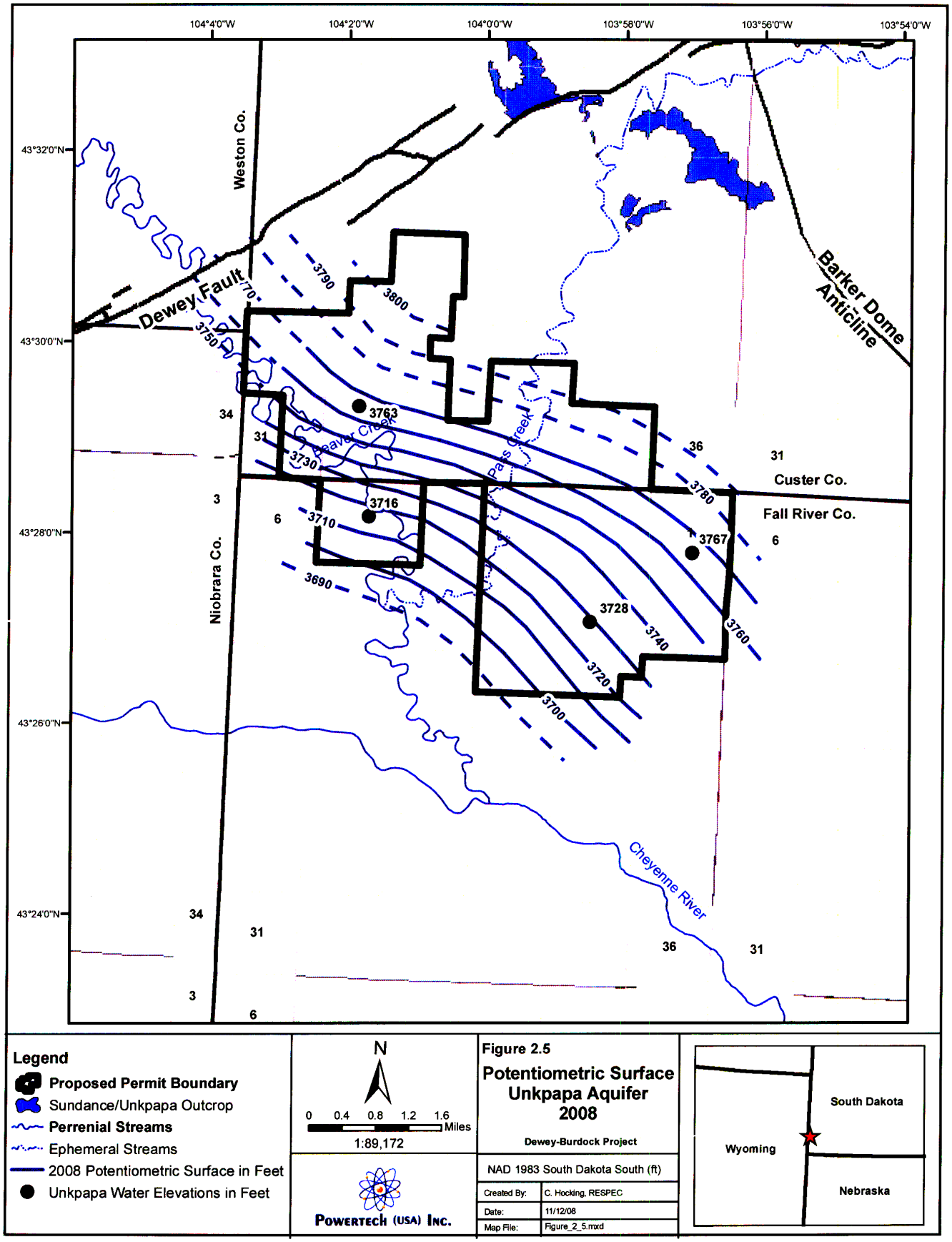
104°4'0"W
104°2'0"W
104°0'0"W
103°58'0"W
103°56'0"W
103°54'0"W
43°32'0"N
43°30'0"N
43°28'0"N
43°26'0"N
43°24'0"N
Weston Co.
Niobrara Co.
Custer Co.
Fall River Co.
Dewey Fault
Barker Dome Anticline
Beaver Creek
Pass Creek
Cheyenne River
3790
3800
3770
3750
3730
3710
3690
3780
3760
3740
3720
3700
3763
3716
3767
3728
34
31
3
6
36
Legend
Proposed Permit Boundary
Sundance/Unkpapa Outcrop
Perrenial Streams
Ephemeral Streams
2008 Potentiometric Surface in Feet
Unkpapa Water Elevations in Feet
N
0 0.4 0.8 1.2 1.6 Miles
1:89,172
POWERTECH (USA) INC.
Figure 2.5
Potentiometric Surface
Unkpapa Aquifer
2008
Dewey-Burdock Project
NAD 1983 South Dakota South (ft)
Created By: C. Hocking, RESPEC
Date: 11/12/08
Map File: Figure_2_5.mxd
South Dakota
Wyoming
Nebraska

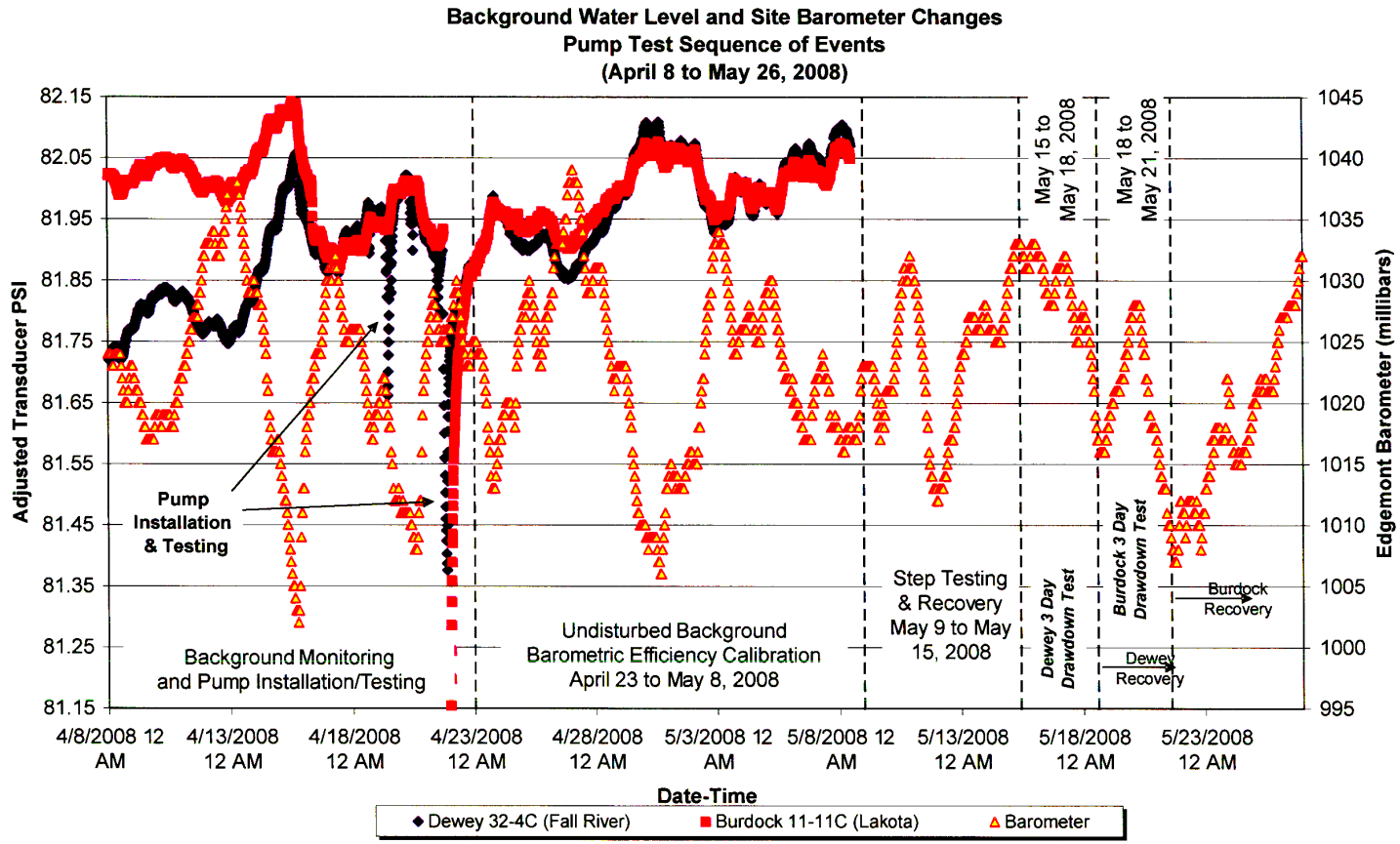

Client	Project	Title	
Knight Piésold CONSULTING	DEWEY-BURDOCK HYDROGEOLOGIC TESTING REPORT	Background Monitoring (April 8 to May 26, 2008)	
	Project No: DV10200279.01	Date: 11/12/08	Figure 3.1

G:\102\00279.01\A\Reports Specs\KP\All Reports\Work in Progress\Hydrogeologic Testing Report\Figures\Figure 3_1 Background Water Levels.xls 11/12/2008

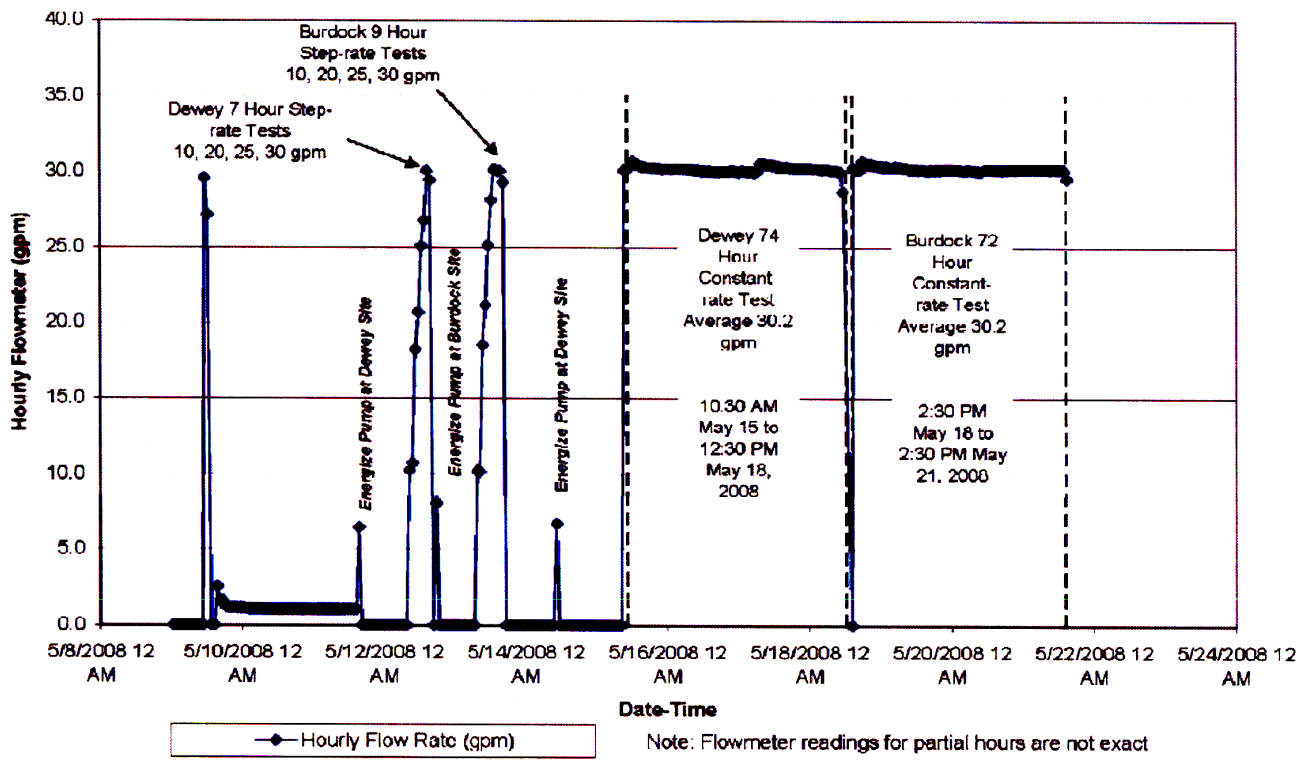

Client	Project	Title	
Knight Piésold CONSULTING	DEWEY-BURDOCK HYDROGEOLOGIC TESTING REPORT	Flowmeter Readings (May 9 to May 24 2008)	
	Project No: DV10200279.01	Date: 11/12/08	Figure 3.2

G:\102\00279.01\A\Reports Specs\KP\All Reports\Work in Progress\Hydrogeologic Testing Report\Figures\Figure 3_2 Flowmeter.xls 11/12/2008

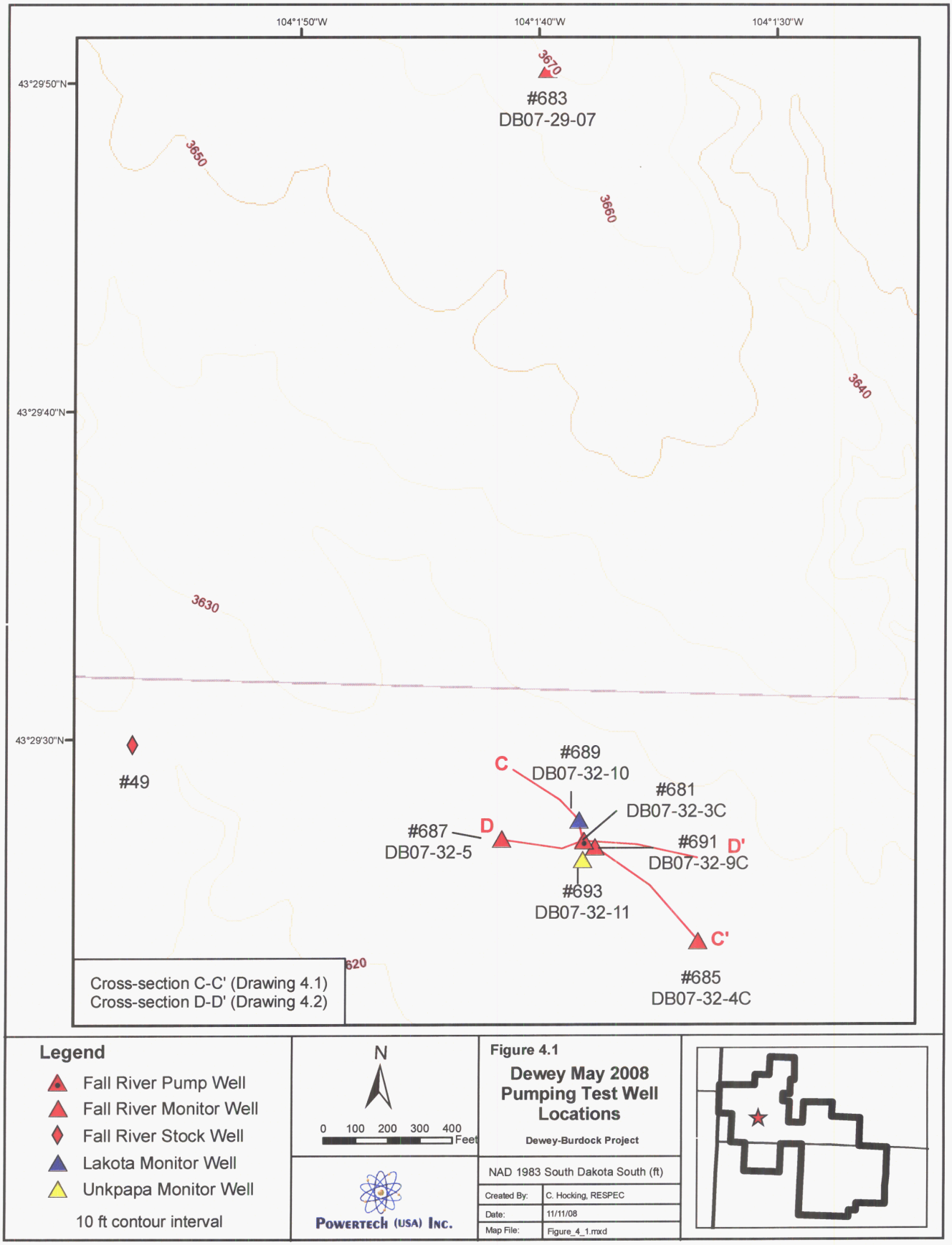
104°1'50"W
104°1'40"W
104°1'30"W
43°29'50"N
43°29'40"N
43°29'30"N
3670
#683
DB07-29-07
3650
3660
3640
3630
620
#49
#689
DB07-32-10
C
#681
DB07-32-3C
#687
DB07-32-5
D
#691
DB07-32-9C
D'
#693
DB07-32-11
C'
#685
DB07-32-4C
Cross-section C-C' (Drawing 4.1)
Cross-section D-D' (Drawing 4.2)
Legend
Fall River Pump Well
Fall River Monitor Well
Fall River Stock Well
Lakota Monitor Well
Unkpapa Monitor Well
10 ft contour interval
N
0 100 200 300 400 Feet
Powertech (USA) Inc.
Figure 4.1
Dewey May 2008 Pumping Test Well Locations
Dewey-Burdock Project
NAD 1983 South Dakota South (ft)
Created By: C. Hocking, RESPEC
Date: 11/11/08
Map File: Figure_4_1.mxd

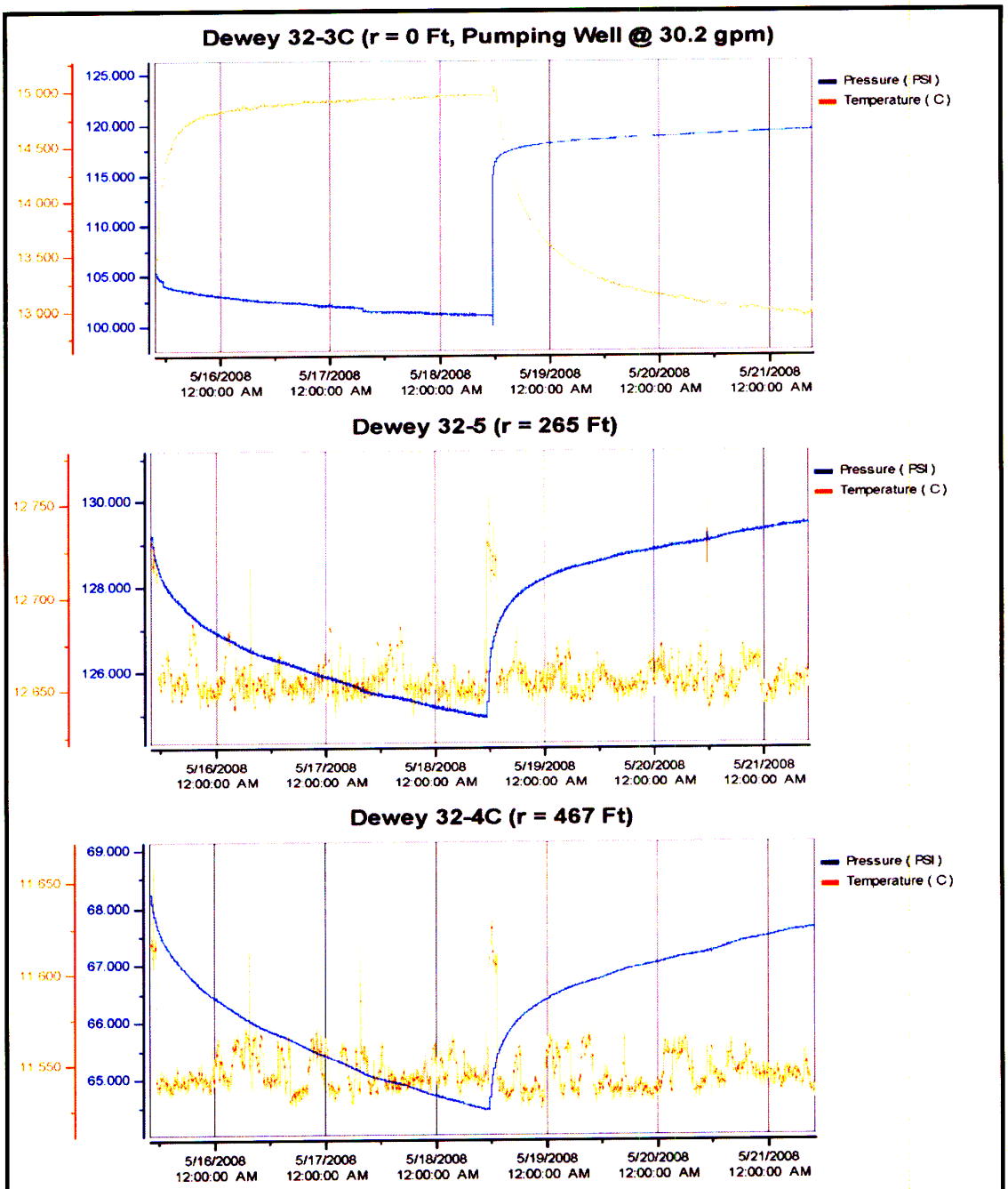

Client	Project	Title	
Knight Piésold CONSULTING	DEWEY-BURDOCK HYDROGEOLOGIC TESTING REPORT	Transducer Response at Dewey Test Pumping Well 32-3C, Observation Wells 32-5 and 32-4C	
	Project No: DV10200279.01	Date: 11/12/08	Figure 4.2

G:\102\00279.01\A\Reports Specs\KP\All Reports\Work in Progress\Hydrogeologic Testing Report\Figures\Figure 4_2 323c_32-5_32-4C.xls 11/12/2008

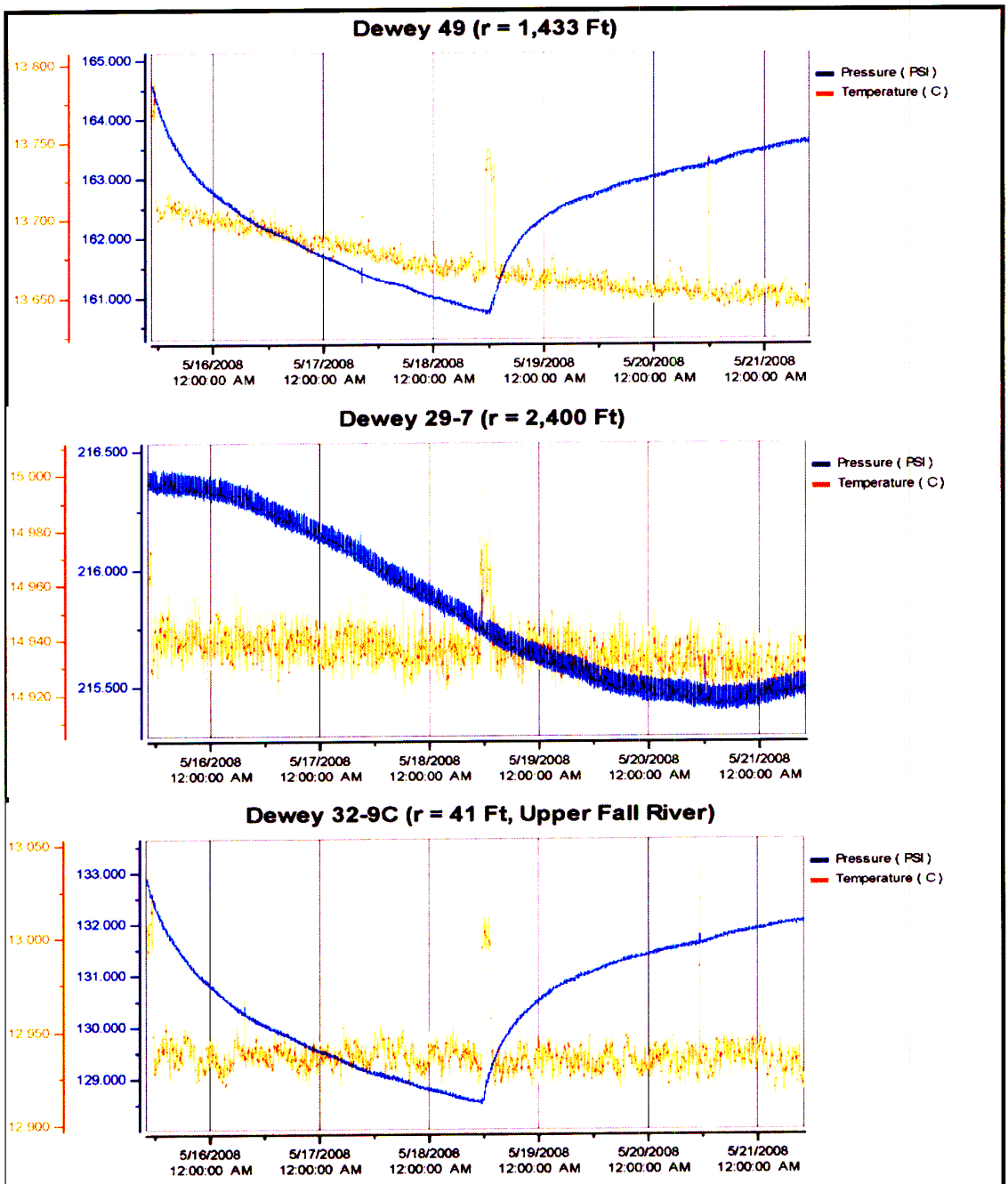

Client	Project	Title	
Knight Piésold CONSULTING	DEWEY-BURDOCK HYDROGEOLOGIC TESTING REPORT	Transducer Response at Dewey Test Observation Wells GW-49, 29-7 and 32-9C	
	Project No: DV10200279.01	Date: 11/12/08	Figure 4.3

G:\102\00279.01\A\Reports Specs\KP\All Reports\Work in Progress\Hydrogeologic Testing Report\Figures\Figure 4_3 GW49_29-9_32-9C.xls 11/12/2008

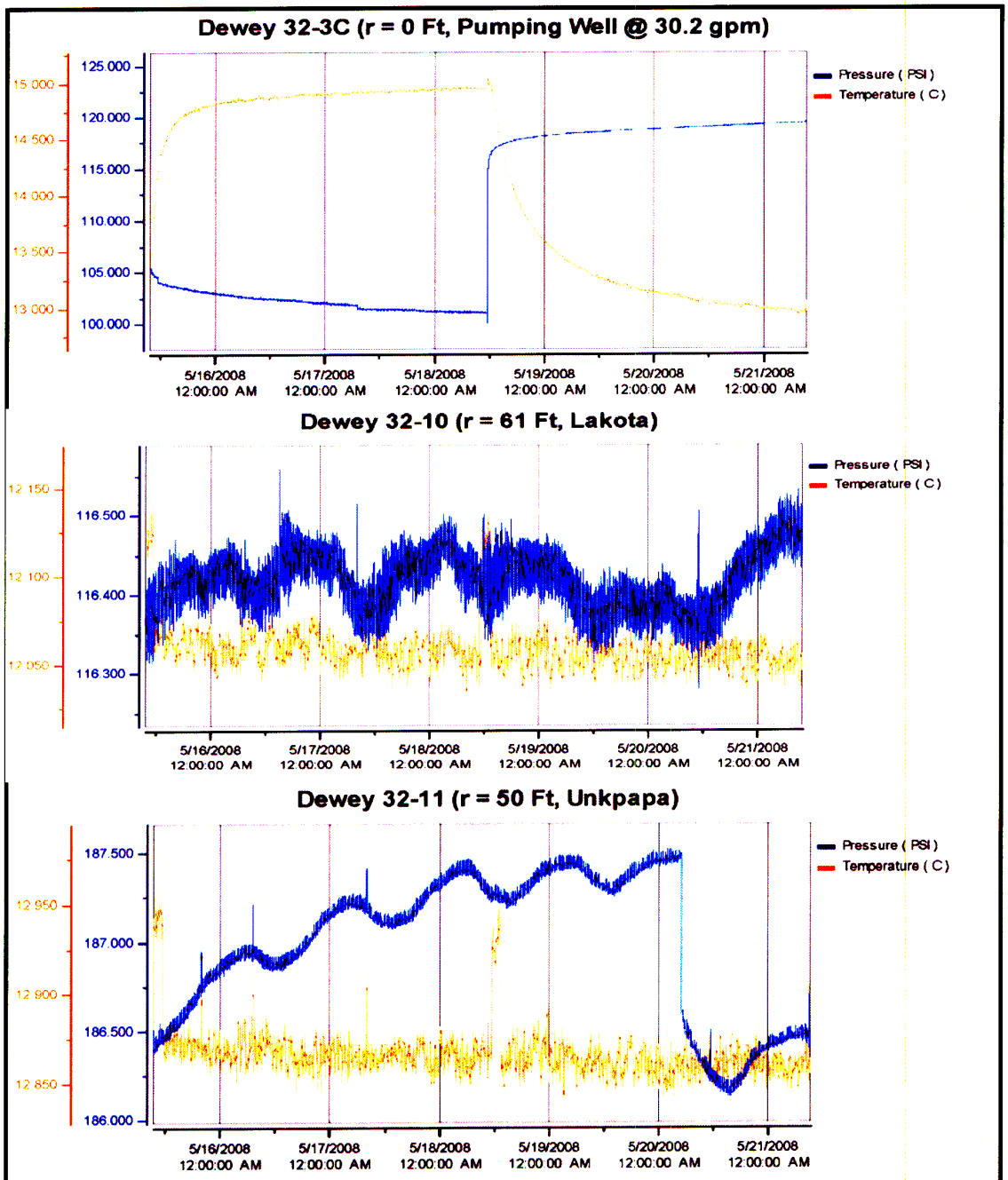

Client	Project	Title	
Knight Piésold CONSULTING	DEWEY-BURDOCK HYDROGEOLOGIC TESTING REPORT	Non-responding Dewey Test Observation Wells 32-10 (Lakota) and 32-11 (Unkpapa) compared to Pumping Well	
	Project No: DV10200279.01	Date: 11/12/08	Figure 4.4

G:\102\00279.01\A\Reports Specs\KP\All Reports\Work in Progress\Hydrogeologic Testing Report\Figures\Figure 4_4 32-23c_32-10 Non Resp.xls 11/12/2008

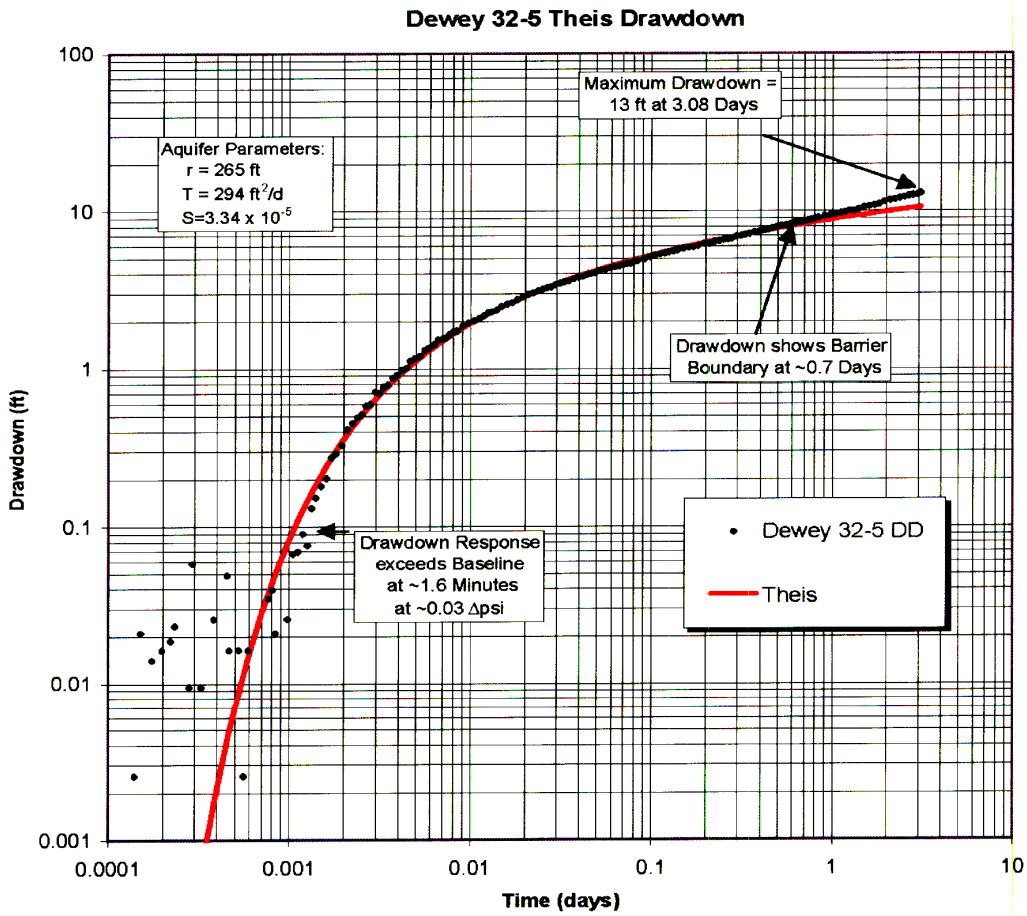

Client	Project	Title	
Knight Piésold CONSULTING	DEWEY-BURDOCK HYDROGEOLOGIC TESTING REPORT	Drawdown and Analysis at Dewey Test Observation Well 32-5	
	Project No: DV10200279.01	Date: 11/12/08	Figure 4.5

G:\102\00279.01\A\Reports Specs\KP\All Reports\Work in Progress\Hydrogeologic Testing Report\Figures\Figure 4_5 Theis 32-5.xls 11/12/2008

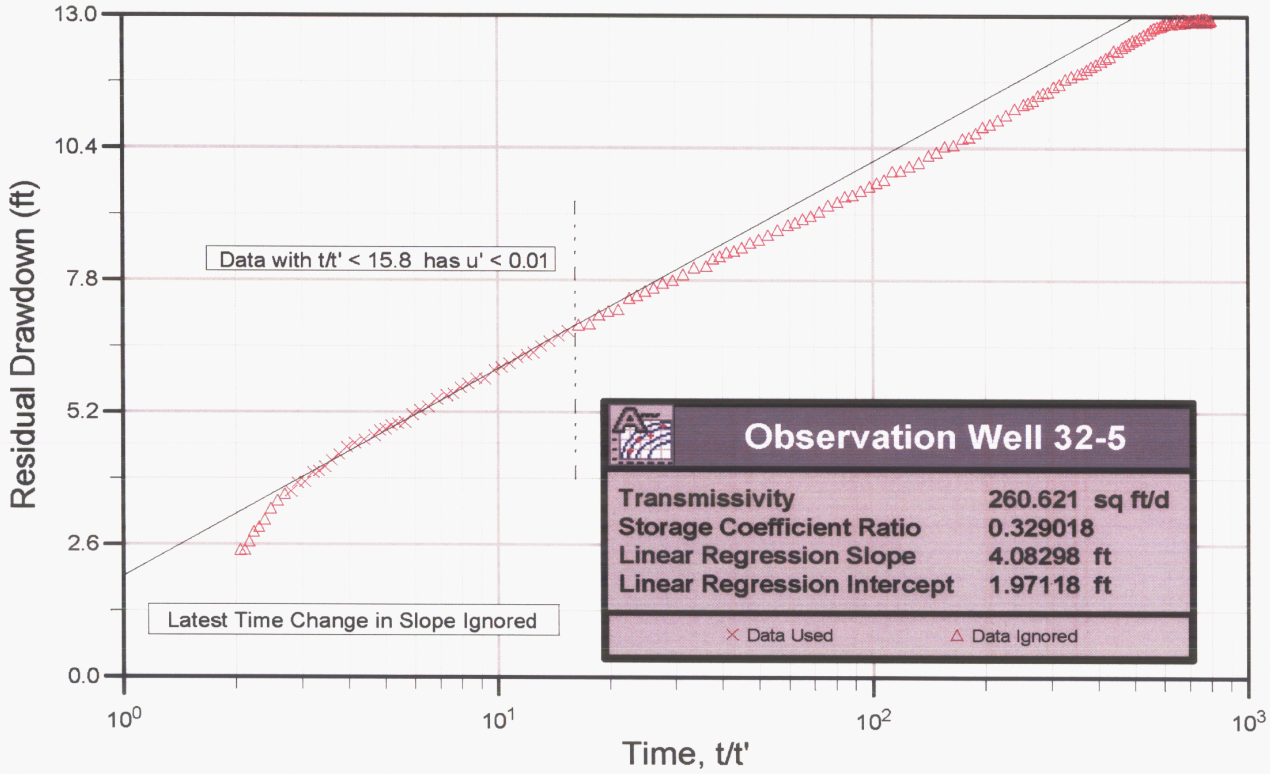

Client	Project	Title
Knight Piésold CONSULTING	DEWEY-BURDOCK HYDROGEOLOGIC TESTING REPORT	Theis Recovery Analysis at Dewey Observation Well 32-5
	Project No: DV10200279.01	Date: 11/12/08 — Figure 4-6

G:\102\00279.01\A\Reports Specs\KP\All Reports\Work in Progress\Hydrogeologic Testing Report\Figures\Figure 4_6 Theis Recovery 32-5.xls 11/12/2008

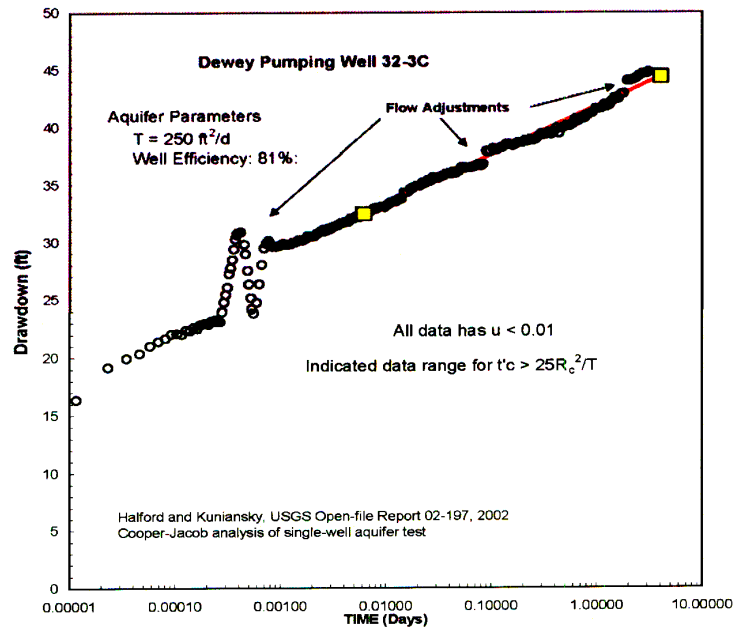

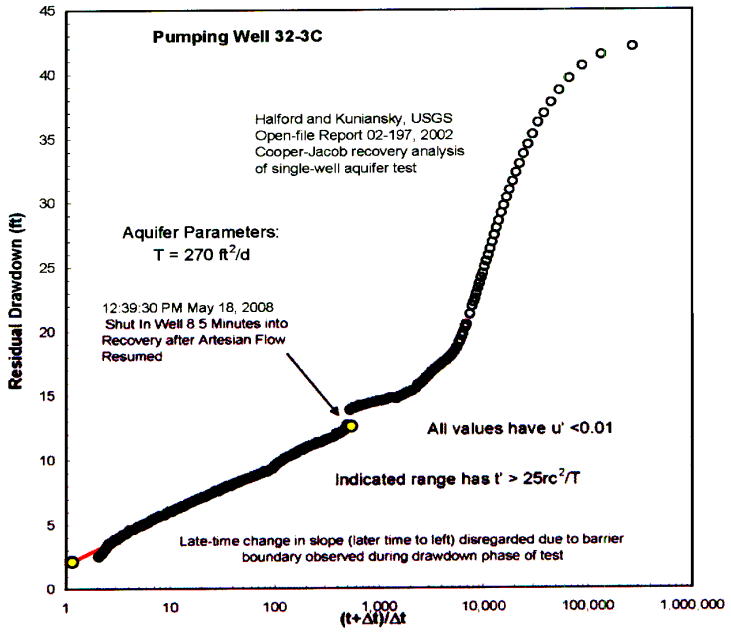

Client	Project	Title	
Knight Piésold CONSULTING	DEWEY-BURDOCK HYDROGEOLOGIC TESTING REPORT	Straight-line Analyses of Drawdown and Recovery at Dewey Pumping Well 32-3C	
	Project No: DV10200279.01	Date: 11/14/08	Figure 4.7

G:\102\00279.01\A\Reports Specs\KP\All Reports\Work in Progress\Hydrogeologic Testing Report\Figures\Figure 4_7 Straight-line Analysis Dewey Pumping Well.xls 11/14/2008

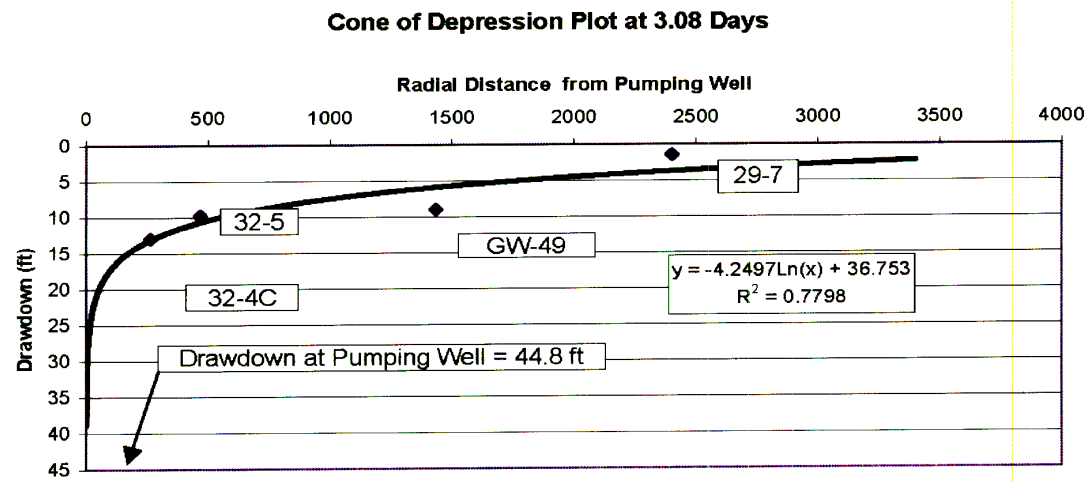

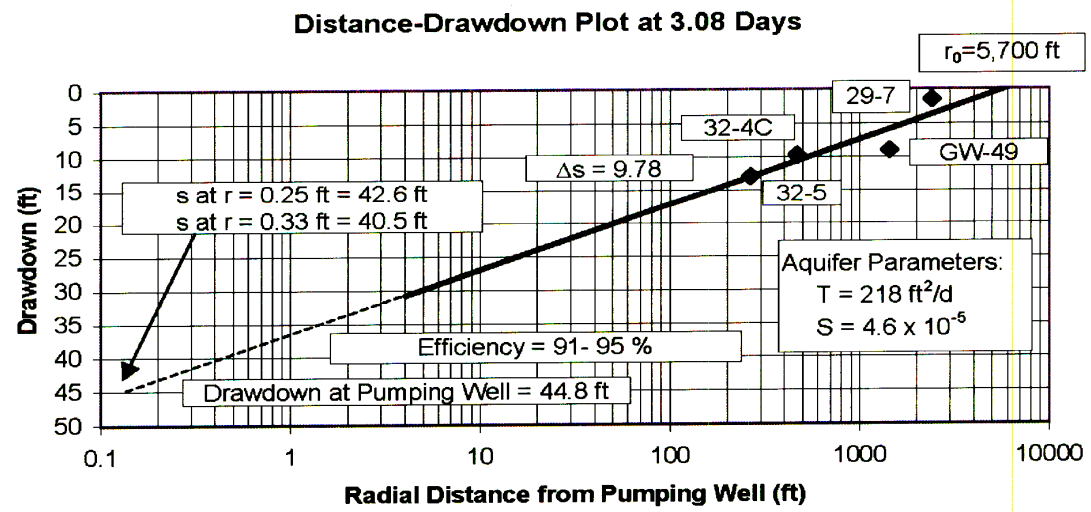

Client	Project	Title	
Knight Piésold CONSULTING	DEWEY-BURDOCK HYDROGEOLOGIC TESTING REPORT	Distance Drawdown Analysis, Dewey Pumping Test	
	Project No: DV10200279.01	Date: 11/12/08	Figure 4.8

G:\102\00279.01\A\Reports Specs\KP\All Reports\Work in Progress\Hydrogeologic Testing Report\Figures\Figure 4_8 Distance Drawdown.xls 11/12/2008

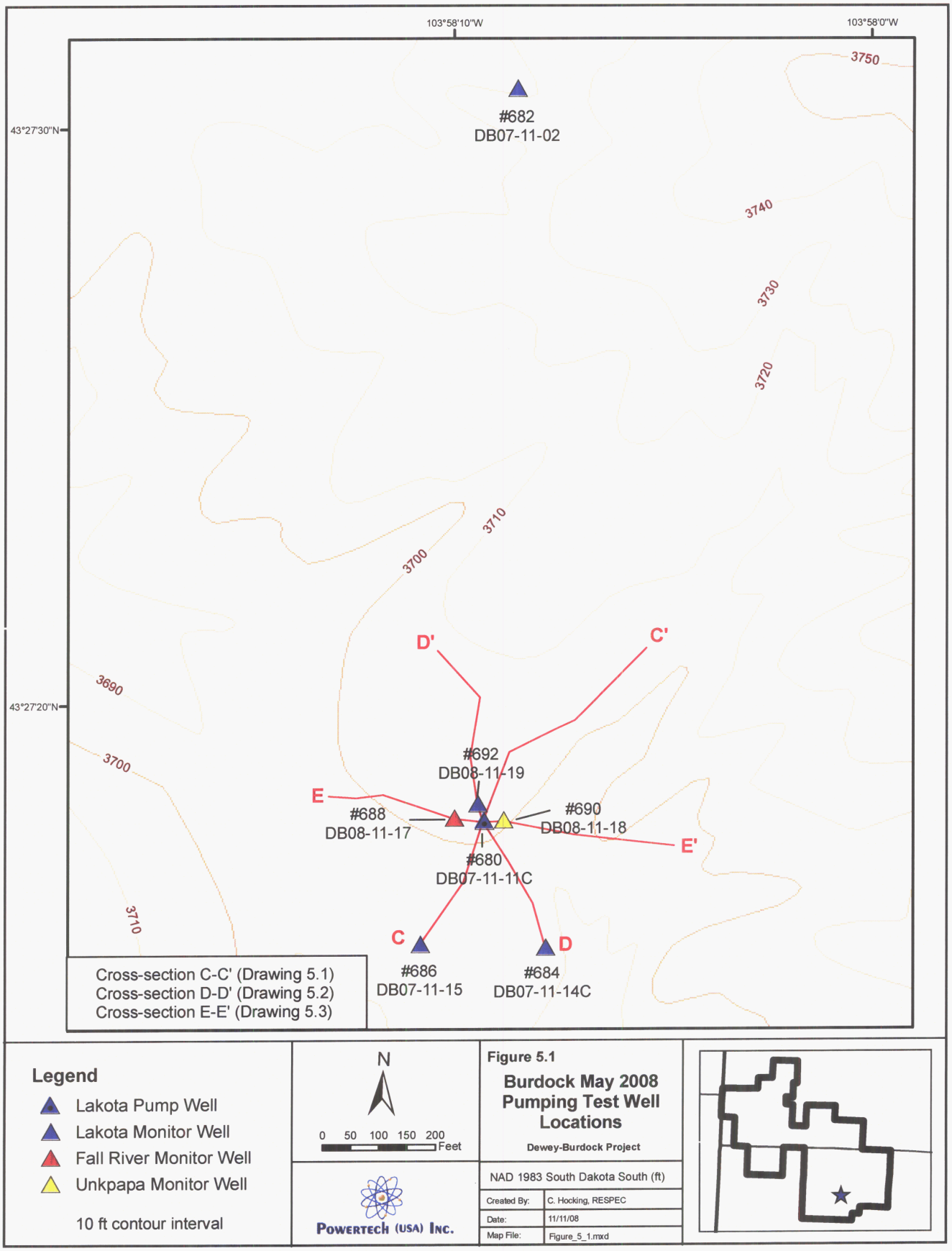
103°58'10"W
103°58'0"W
43°27'30"N
43°27'20"N
3750
3740
3730
3720
3710
3700
3690
3700
3710
#682
DB07-11-02
D'
C'
E
E'
#692
DB08-11-19
#688
DB08-11-17
#690
DB08-11-18
#680
DB07-11-11C
C
D
#686
DB07-11-15
#684
DB07-11-14C
Cross-section C-C' (Drawing 5.1)
Cross-section D-D' (Drawing 5.2)
Cross-section E-E' (Drawing 5.3)
Legend
Lakota Pump Well
Lakota Monitor Well
Fall River Monitor Well
Unkpapa Monitor Well
10 ft contour interval
N
0 50 100 150 200
Feet
POWERTECH (USA) INC.
Figure 5.1
Burdock May 2008
Pumping Test Well
Locations
Dewey-Burdock Project
NAD 1983 South Dakota South (ft)
Created By: C. Hocking, RESPEC
Date: 11/11/08
Map File: Figure_5_1.mxd

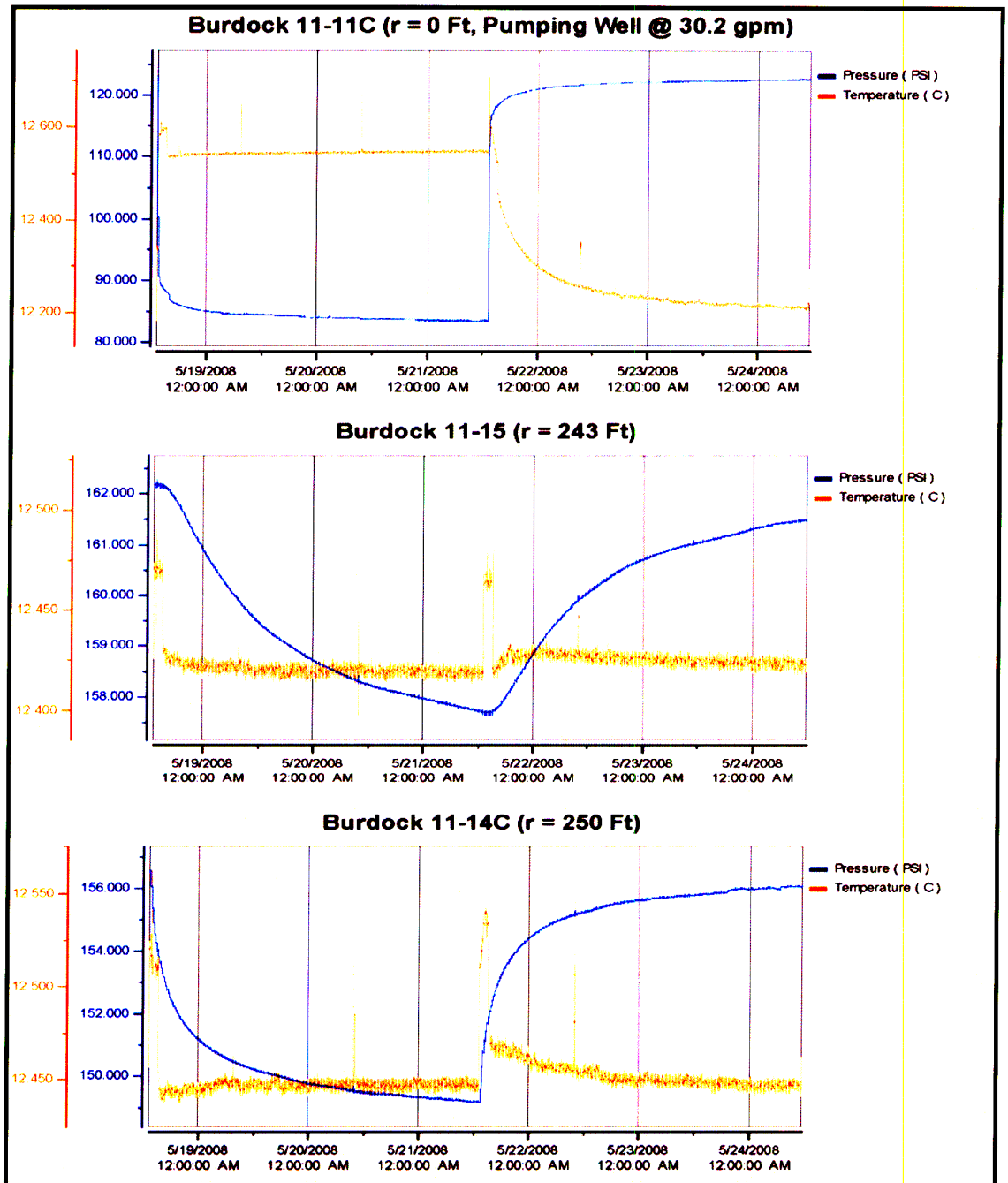

Client	Project	Title	
Knight Piésold CONSULTING	DEWEY-BURDOCK HYDROGEOLOGIC TESTING REPORT	Transducer Response at Burdock Test Pumping Well 11-11C, Observation Wells 11-15, and 11-14C	
	Project No: DV10200279.01	Date: 11/12/08	Figure 5.2

G:\102\00279.01\A\Reports Specs\KP\All Reports\Work in Progress\Hydrogeologic Testing Report\Figures\Figure 5_2 11-11c_11-15_11-14C.xls 11/12/2008

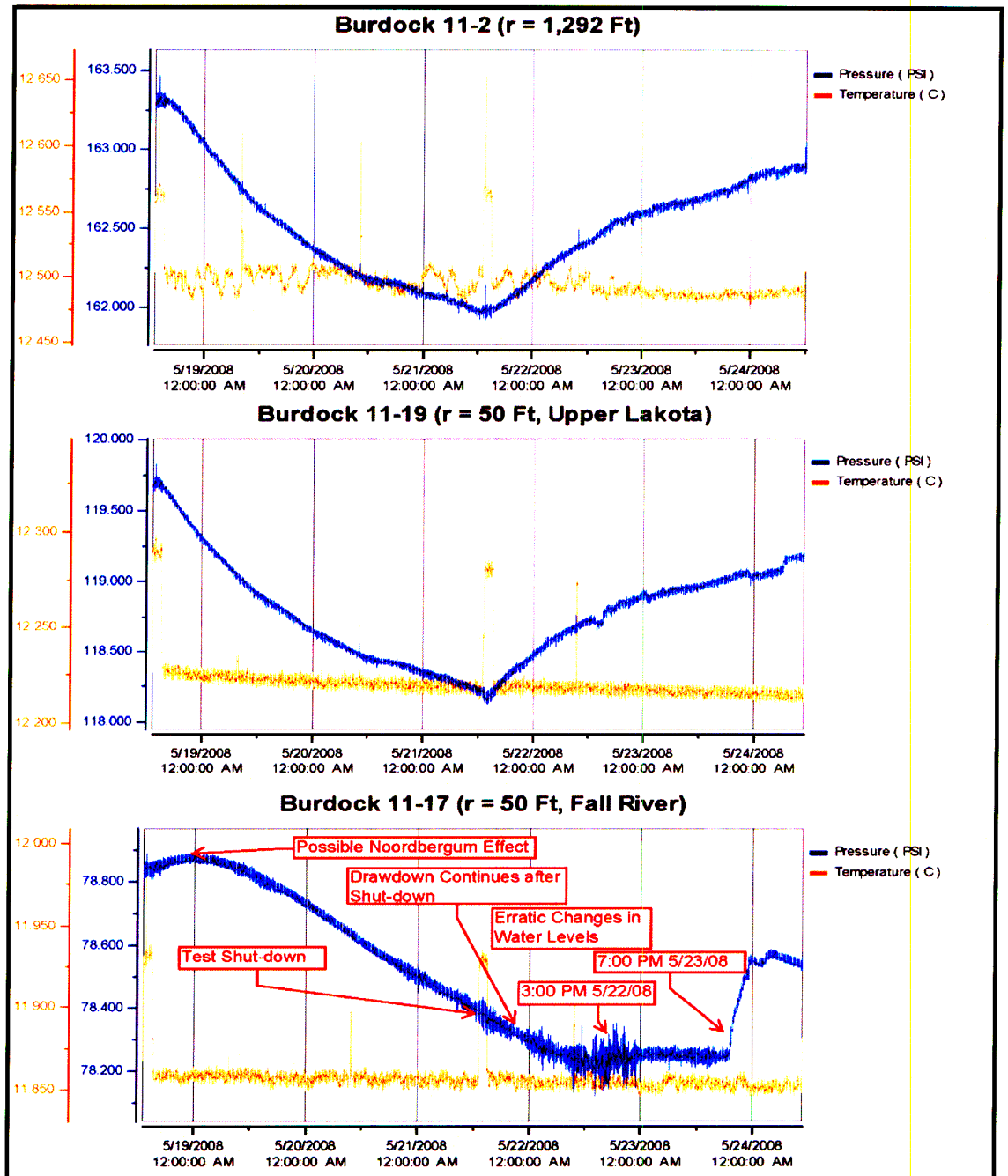

Client	Project	Title	
Knight Piésold CONSULTING	DEWEY-BURDOCK HYDROGEOLOGIC TESTING REPORT	Transducer Response at Burdock Test Observation Wells 11-2, 11-19 and 11-17	
	Project No: DV10200279.01	Date: 11/12/08	Figure 5.3

G:\102\00279.01\A\Reports Specs\KP\All Reports\Work in Progress\Hydrogeologic Testing Report\Figures\Figure 5_3 11-2_11-19_11-17.xls 11/12/2008

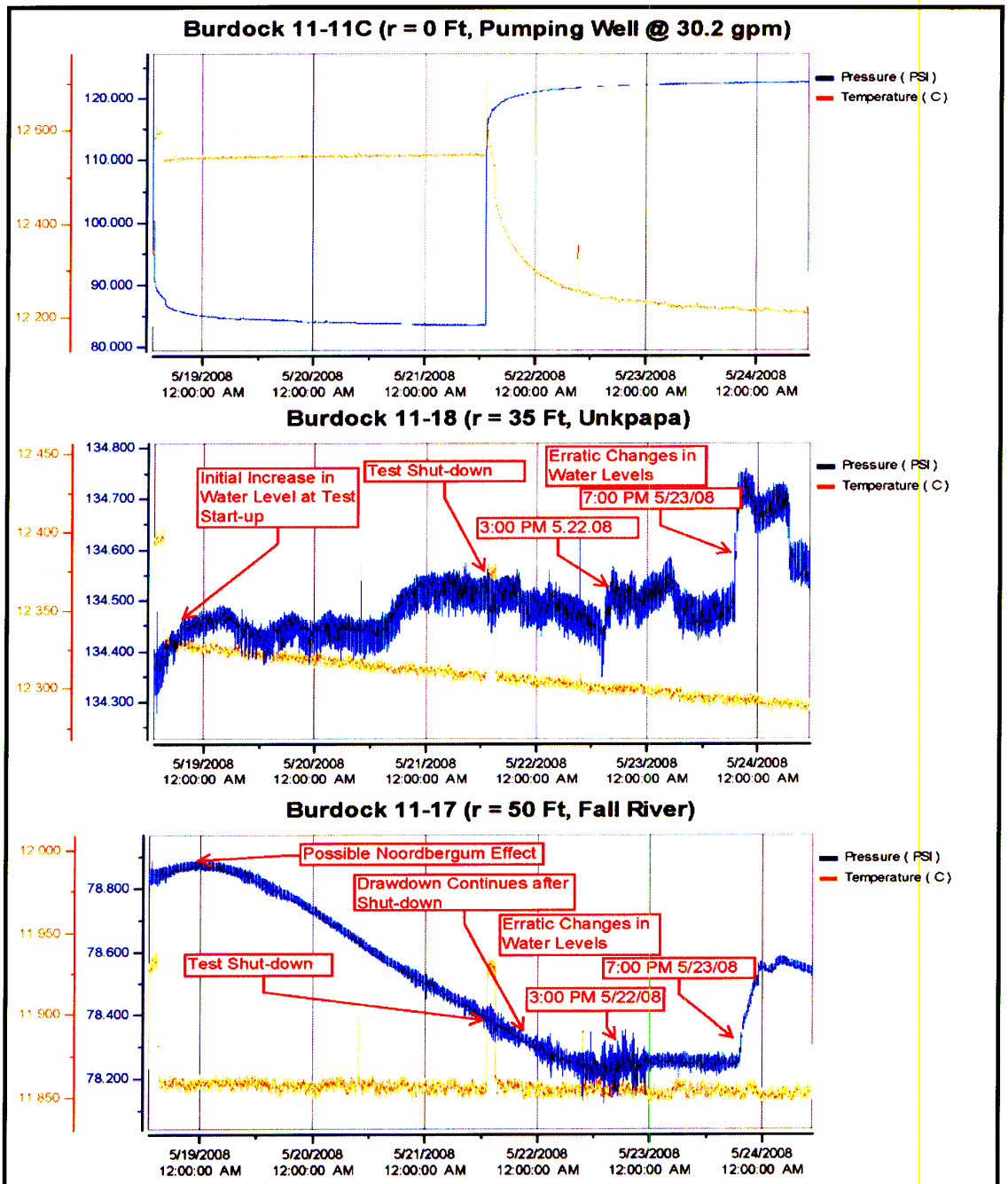

Client	Project	Title	
Knight Piésold CONSULTING	DEWEY-BURDOCK HYDROGEOLOGIC TESTING REPORT	Non-responding Burdock Test Observation Well 11-18 (Unkpapa) compared to Pumping Well and Observation Well 11-17 (Fall River)	
	Project No: DV10200279.01	Date: 11/12/08	Figure 5.4

G:\102\00279.01\A\Reports Specs\KP\All Reports\Work in Progress\Hydrogeologic Testing Report\Figures\Figure 5_4 11-11c_11-18 Non Resp.xls 11/12/2008

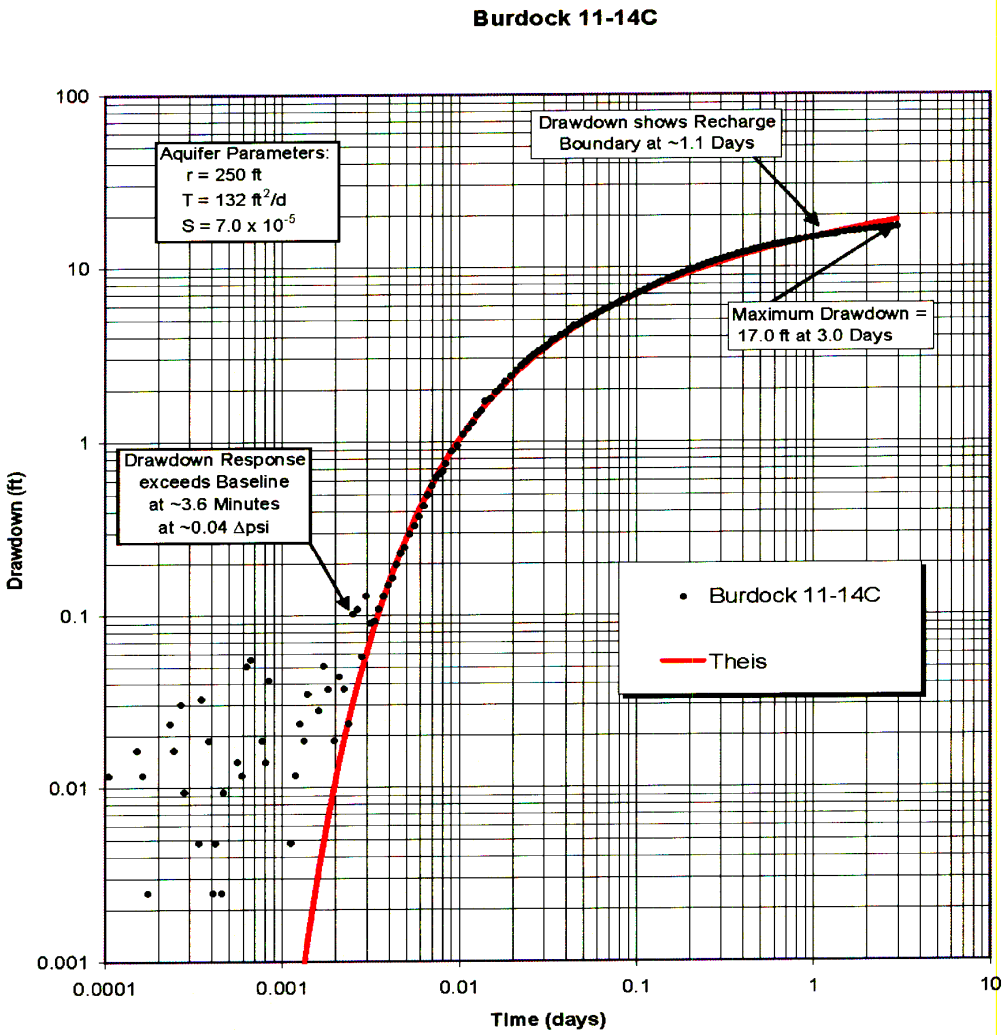

Client	Project	Title	
Knight Piésold CONSULTING	DEWEY-BURDOCK HYDROGEOLOGIC TESTING REPORT	Drawdown and Analysis at Burdock Test Observation Well 11-14C	
	Project No: DV10200279.01	Date: 11/12/08	Figure 5.5

G:\102\00279.01\A\Reports Specs\KP\All Reports\Work in Progress\Hydrogeologic Testing Report\Figures\Figure 5_5 Theis 11-14C.xls 11/12/2008

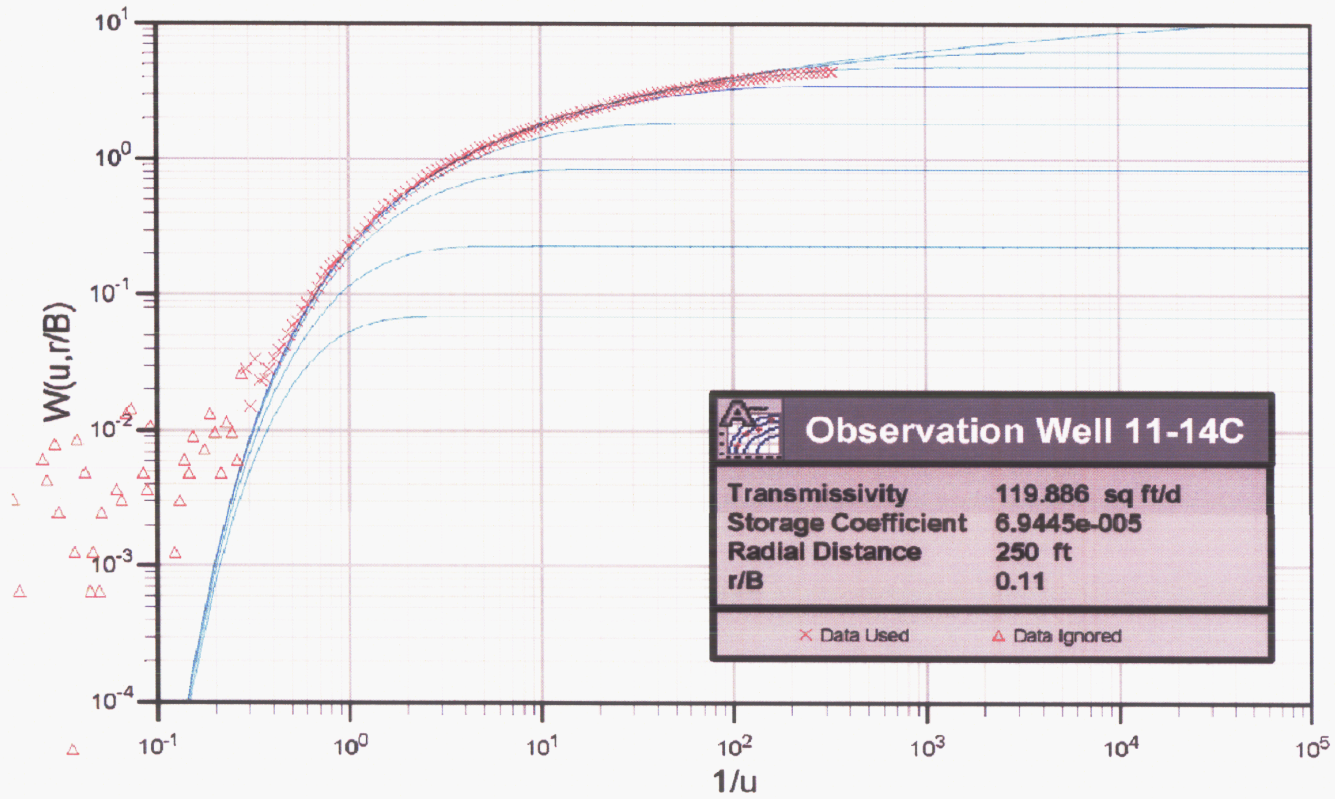

Client	Project	Title	
Knight Piésold CONSULTING	DEWEY-BURDOCK HYDROGEOLOGIC TESTING REPORT	Hantush-Jacob Leaky Confined Aquifer Analysis at Burdock Observation Well 11-14C	
	Project No: DV10200279.01	Date: 11/12/08	Figure 5.6

G:\102\00279.01\A\Reports Specs\KP\All Reports\Work in Progress\Hydrogeologic Testing Report\Figures\Figure 5_6 HJ 11-14C.xls 11/12/2008

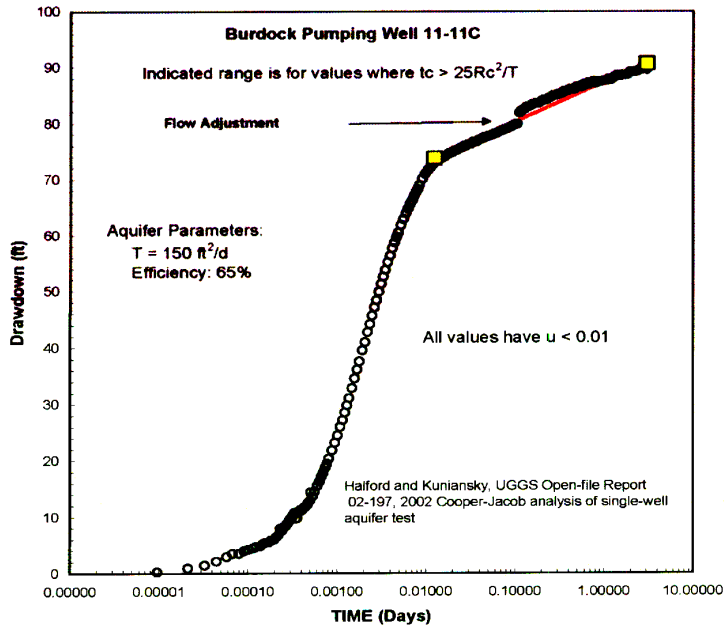

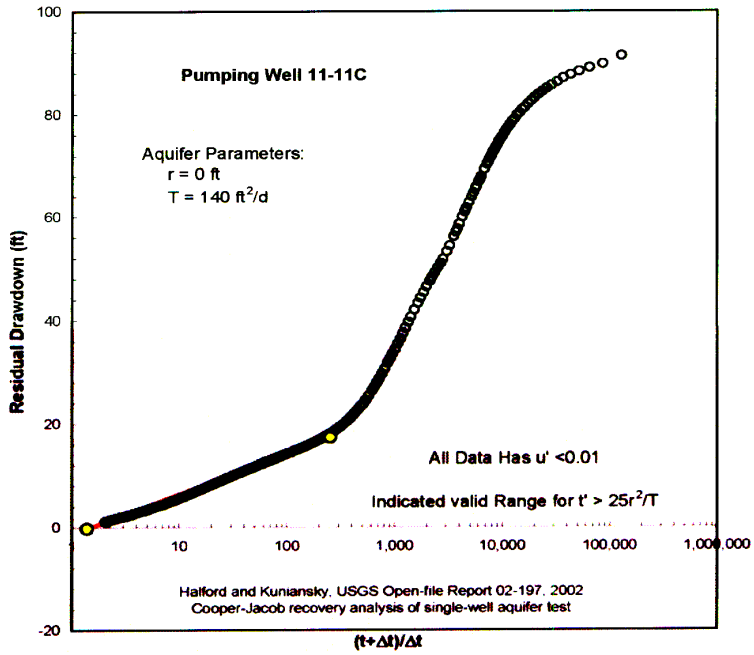

Client	Project	Title	
Knight Piésold CONSULTING	DEWEY-BURDOCK HYDROGEOLOGIC TESTING REPORT	Straight-line Analyses of Drawdown and Recovery at Burdock Pumping Well 11-11C	
	Project No: DV10200279.01	Date: 11/12/08	Figure 5.7

G:\102\00279.01\A\Reports Specs\KP\All Reports\Work in Progress\Hydrogeologic Testing Report\Figures\Figure 5_7 Straight Line Burdock Pump.xls 11/12/2008

This page intentionally left blank

Drawings

This page intentionally left blank

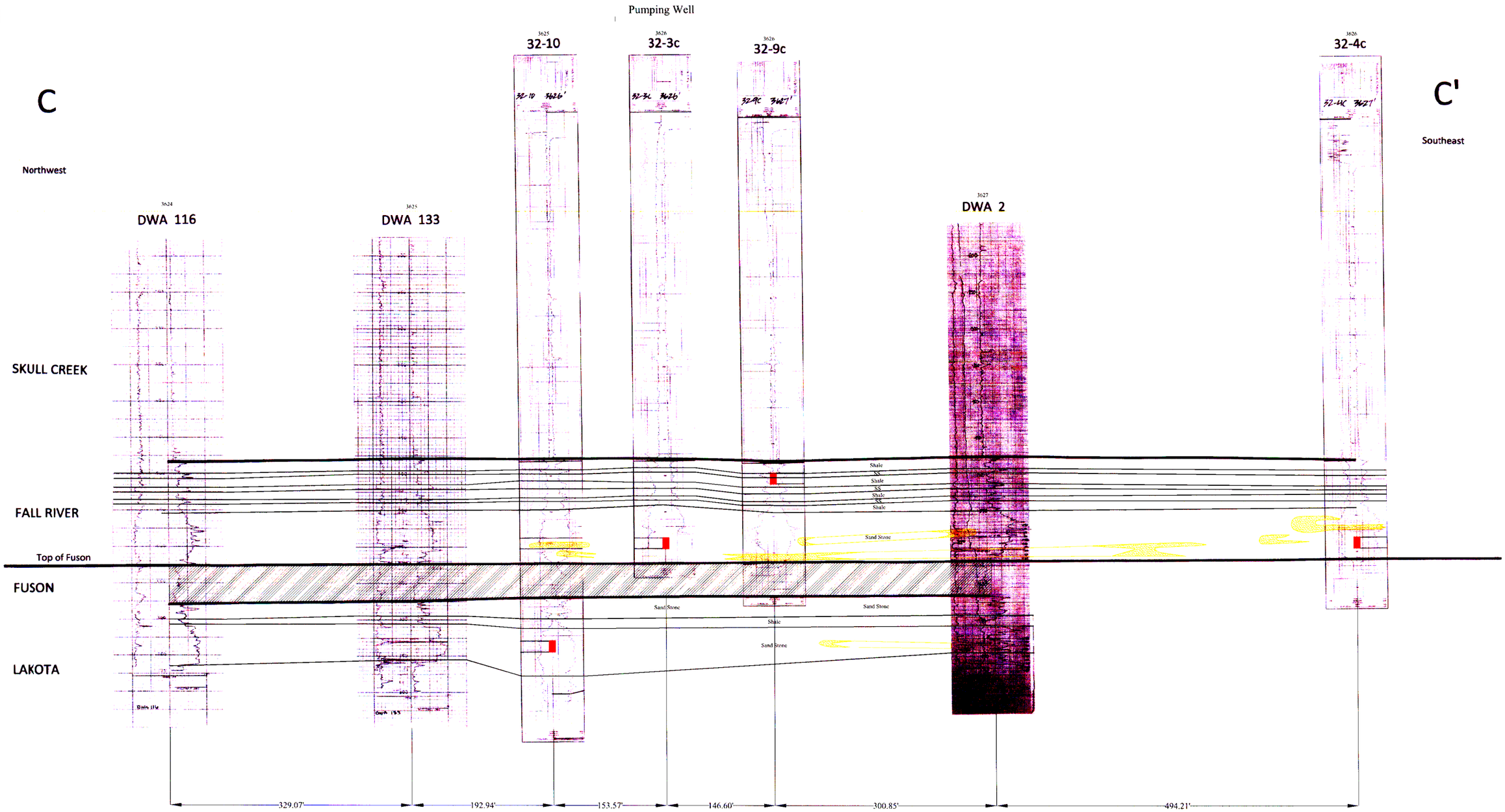

Legend

Screen

Ore

DWA 116 Bore/Well Hole ID

Vertical 1"=60'

Not to Scale

CONSULTANT

REF

CHECK SCALES

If this bar does not measure 1 inch this map is not at its original scale

Arch D 24" x 36"

CONFIDENTIAL
NOT for Reproduction or Distribution
Subject to Revision

REVISIONS

#	DRAWN	CHECKED	APPROVED	DATE

POWERTECH (USA) INC.

DRAWING 4.1
Stratigraphic Cross-Section C-C'
Dewey Pump Test

PLOT DATE	12-Nov-2008	DATE	11-November-2008
DRAWN		CHECKED	F. Lichnovsky
SCALE	1"=60'	FILENAME	c:\powertech\dewey-burdocks cross-sections 11-11-08\dewey pump test c-c' 11-11-08.dwg

PROJECT Dewey Pump Test Drawing 4.1

COORDS

1 OF 5

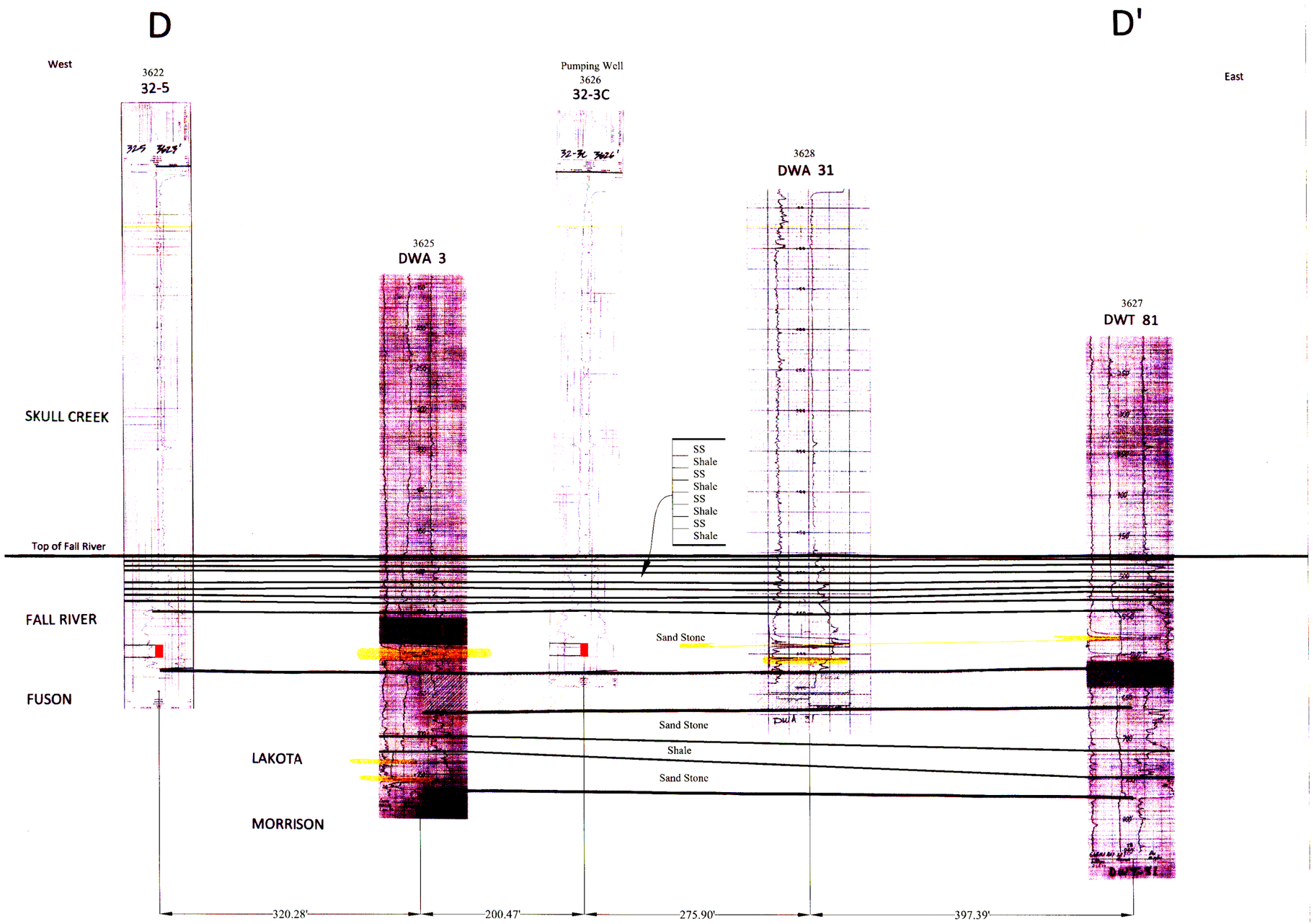

Legend

Screen

Ore

DWA 116 Bore/Well Hole ID

Vertical 1"=60'

Not to Scale

CONSULTANT

REF

CHECK SCALES

If this bar does not measure 1 inch this map is not at its original scale

Arch D 24" x 36"

CONFIDENTIAL
NOT for Reproduction or Distribution
Subject to Revision

REVISIONS

#	DRAWN	CHECKED	APPROVED	DATE

POWERTECH (USA) INC.

DRAWING 4.2
Stratigraphic Cross-Section D-D'
Dewey Pump Test

PLOT DATE	12-Nov-2008	DATE	11-November-2008
DRAWN		CHECKED	F. Lichnovsky
SCALE	1"=60'	FILENAME	c:\powertech\dewey-burdocks cross-sections 11-11-08\dewey pump test d-d' 11-11-08.dwg

PROJECT Dewey Pump Test

COORDS

2 OF 5

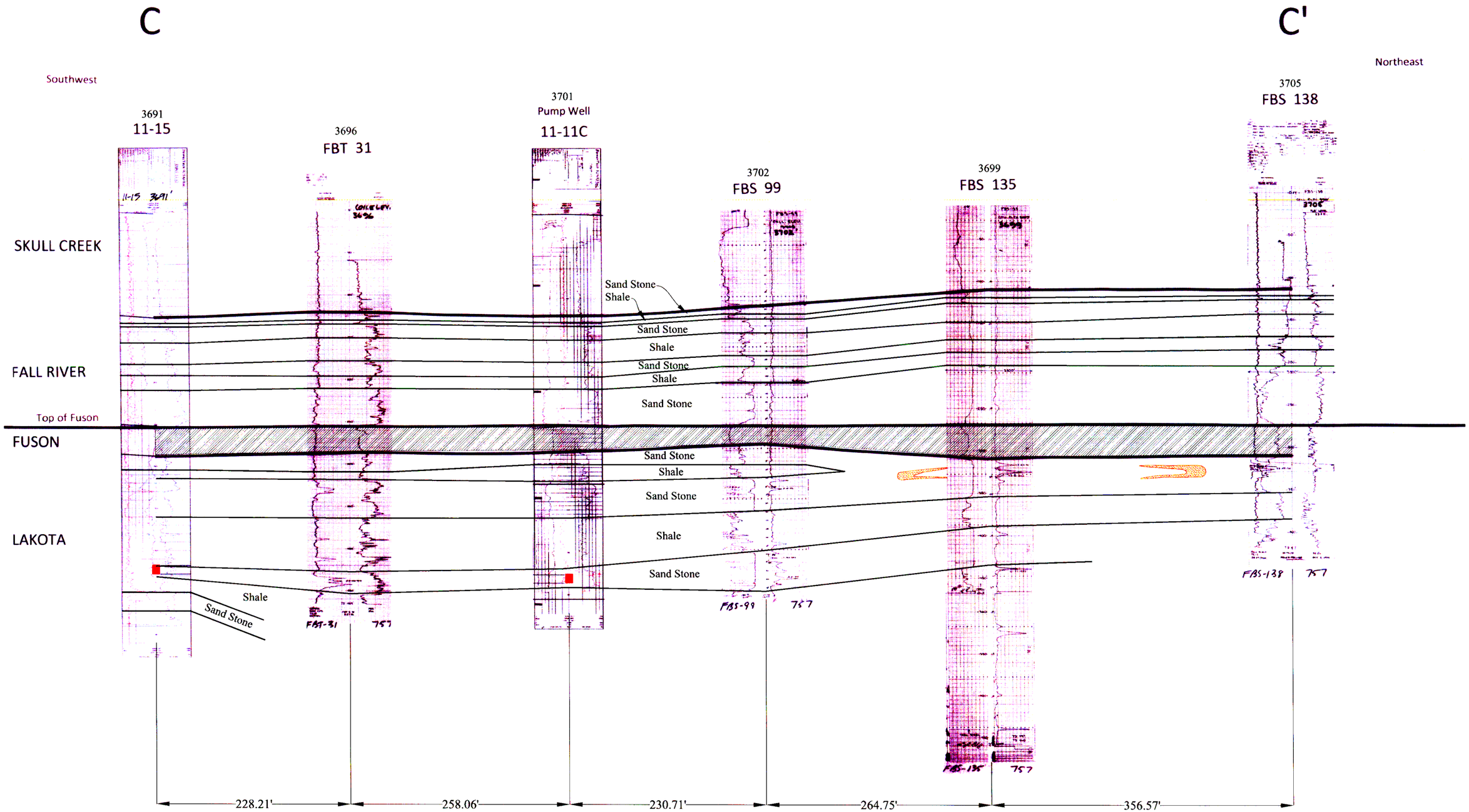

Legend

Screen

Ore

DWA 116 Bore/Well Hole ID

Vertical 1"=50'

Not To Scale

CONSULTANT

REF

CHECK SCALES

If this bar does not measure 1 inch this map is not at its original scale

Arch D 24" x 36"

CONFIDENTIAL
NOT for Reproduction or Distribution
Subject to Revision

REVISIONS

#	DRAWN	CHECKED	APPROVED	DATE

POWERTECH (USA) INC.

DRAWING 5.1
Stratigraphic Cross-Section C-C'
Burdock Pump Test

PLOT DATE	12-Nov-2008	DATE	12-November-2008
DRAWN		CHECKED	F. Lichnovsky
SCALE	1"=50'	FILENAME	c:\powertech\in south dakota\dewey-burdock\dew_burd x-sections\burd_pump_test strat c-c'.dwg

PROJECT Burdock Pump Test

COORDS

OF 5

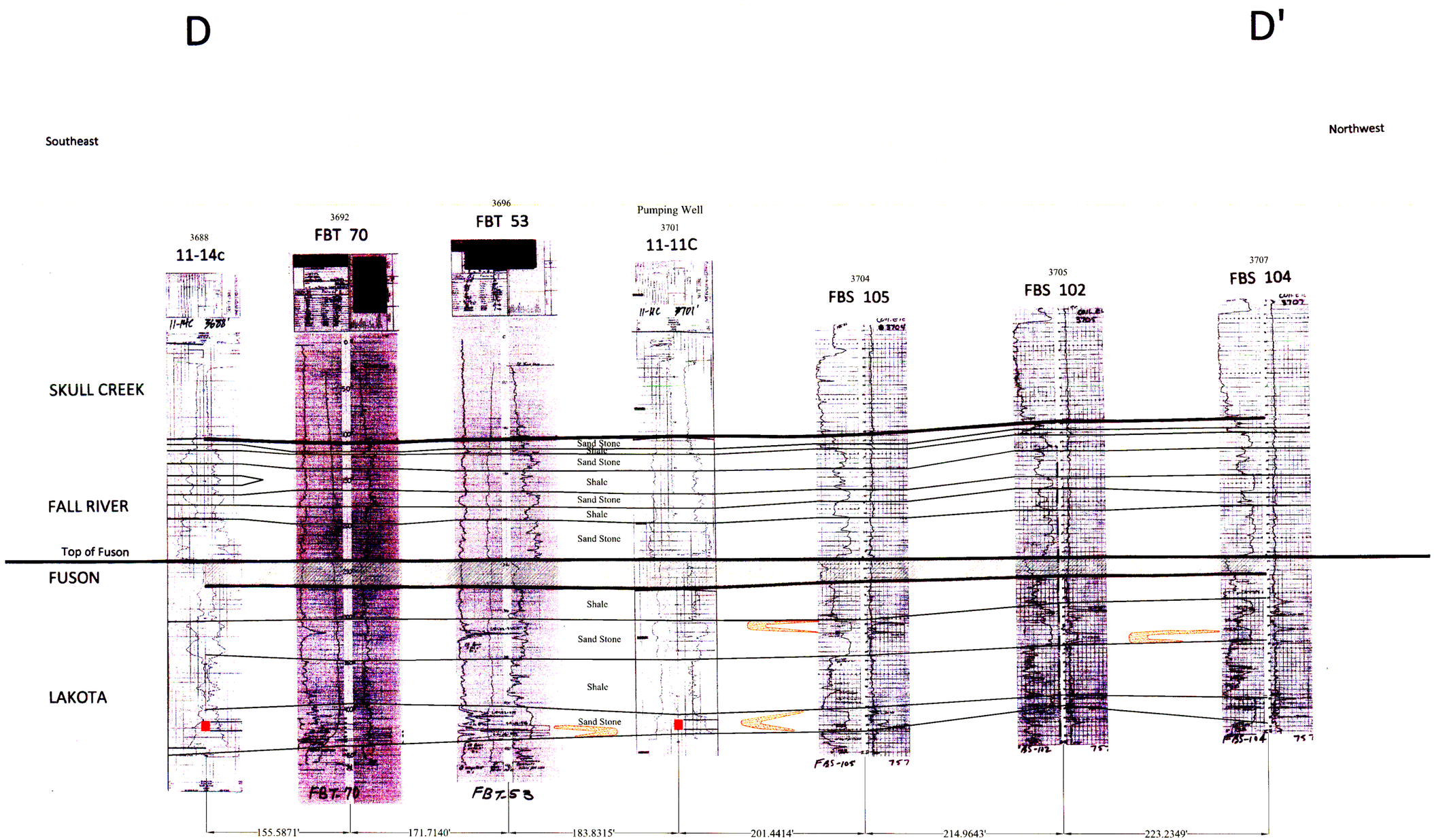

Legend

Screen

Ore

11-14c Bore/Well Hole ID

CONFIDENTIAL
NOT for Reproduction or Distribution
Subject to Revision

REVISIONS

#	DRAWN	CHECKED	APPROVED	DATE

POWERTECH (USA) INC.

DRAWING 5.2
Stratigraphic Cross-Section D-D'
Burdock Pump Test

PLOT DATE	12-Nov-2008	DATE	12-November-2008
DRAWN		CHECKED	F. Lichnovsky
SCALE	1"=50'	FILENAME	c:\powertech\dewey-burdocks cross-sections 11-11-08\burdock pump test d-d' 11-12-08.dwg

PROJECT: Burdock Pump Test
COORD:
4 OF 5

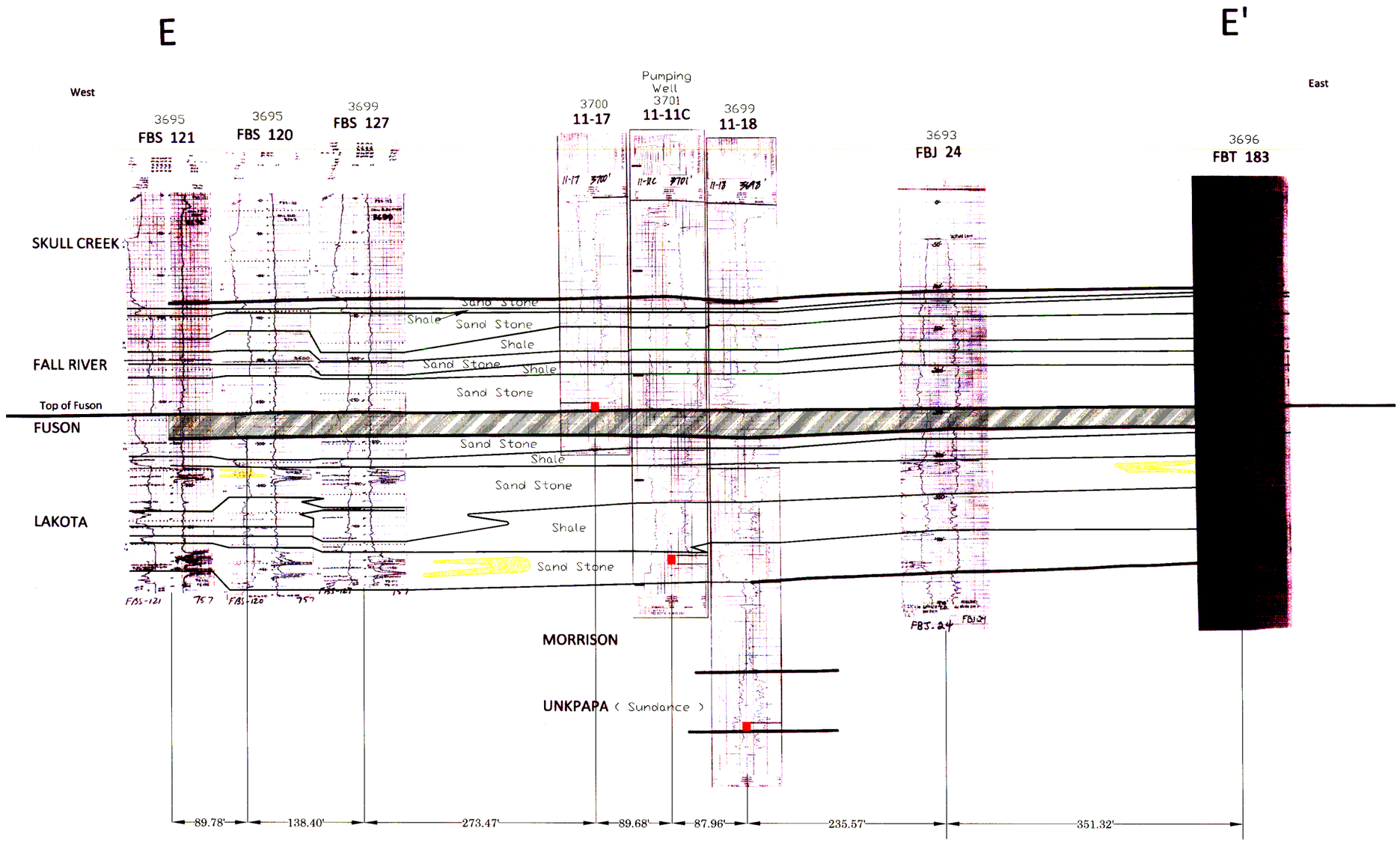

Legend

Screen

Ore

FBS 121 Bore/Well Hole ID

Vertical 1"=60'

Not To Scale

CONSULTANT

REF

CHECK SCALES

If this bar does not measure 1 inch this map is not at its original scale

Arch D 24" x 36"

CONFIDENTIAL
NOT for Reproduction or Distribution
Subject to Revision

REVISIONS

#	DRAWN	CHECKED	APPROVED	DATE

POWERTECH (USA) INC.

DRAWING 5.3
Stratigraphic Cross-Section E-E'
Burdock Pump Test

PLOT DATE	12-Nov-2008	DATE	12-November-2008
DRAWN		CHECKED	F. Lichnovsky
SCALE	1"=60'	FILENAME	c:\powertech\dewey-burdocks cross-sections 11-11-08\burdock pump test e-e' 11-12-08.dwg

PROJECT Burdock Pump Test

COORDS

5 OF 5

Knight Piésold
CONSULTING

Appendix A
Additional Information and Analysis Procedures

Appendix A-1: **Background Monitoring and Barometric Efficiency Calculations**

Appendix A-2 **Overview of Aquifer Test Analysis Procedures and Tools Used**

This page intentionally left blank

Knight Piésold
CONSULTING

Appendix A-1

Background Monitoring and Barometric Efficiency Calculations

This page intentionally left blank

Background Monitoring and Barometric Efficiency Calculations

Pressure transducers were installed in both wells at both sites by April 2, 2008 in order to obtain background ground water level measurements. At the Burdock test site, a transducer was installed in the designated pumping well (DB07-11-11C) in the lower Lakota Formation. At the Dewey test site, a transducer was installed in observation well (DB07-32-4C), screened in the same zone as the pumping well in the lower Fall River Formation.

Figure 3.1 in the text illustrates background measurements before the pumping tests and also the sequence of subsequent test events. The left axis of the figure indicates a narrow range of 1 psi. The background measurements shown on the figure fluctuate over a range of about 0.4 psi.

Converting Pressure Measurements to Head

Pressure transducer psi coverts directly to head [feet of water overlying the transducer] according to the relationship:

$$\begin{aligned} \text{Head [ft}_{H20}] &= P\,[_{PSI}] \times 144\ in^2/ft^2 \div \gamma_{H20}\ \text{[pounds per cubic foot]} \\ &= P\,[_{PSI}] \times 144/62.48 \\ &= P\,[_{PSI}] \times 2.31 \end{aligned}$$

Where γ H_2O [pounds per cubic foot] is the unit weight of water, ignoring temperature effects.

Therefore, a change in transducer pressure (Δpsi) corresponds to a change in water level of about 2.31 [ft $_{H20}$] x Δpsi with the same sense of increase or decrease. Total variations in background changes in groundwater levels over the one month period of record on Figure 3.1 (in the text) thus correspond to about 0.9 feet of water, which could be significant, although it will be established that such background variations over the time of a pump test do not significantly affect interpretations of the tests.

As indicated on Figure 3.1 (in the text), more than one month of background measurements were obtained from April 8 to May 9, 2008. However, this was also a period when pump installation and testing produced temporary drawdowns where the psi readings dropped below the scale of the figure.

The right hand axis on Figure 3.1 (in the text) illustrates hourly barometric pressure measurements in millibars obtained from the meteorological station installed at the site. The site station is maintained by South Dakota State University (SDSU) at the following URL: "http://climate.sdstate.edu/awdn/edgemont/archive3.asp". Barometric pressure reported by SDSU data is available only in the hourly dataset.

Barometric and Other Water Level Corrections

A period of about two weeks (April 23 to May 8, 2008) after pump installation and initial testing was designated as a period for undisturbed background water level monitoring in order to obtain data for possible barometric corrections. Inspection of Figure 3.1 (in the text) finds the expected inverse relationship between site barometer readings and increases or decreases in ground water levels. There are also smaller order cyclic sinusoidal variations which occur twice daily attributable to lunar tidal cycles.

Two types of barometric and other water level corrections were employed as described separately below.

Manual Barometric Efficiency Corrections

The first correction was manually evaluating the data based on total head (i.e., the transducer psi reading) and correcting the values to the barometric pressure (i.e., barometer millibars converted to psi) trends throughout the test. Kruseman and de Ridder (1991) and Gontheir (2007) state that the barometric efficiency (BE) can be defined as the change in water level in a well versus a change in atmospheric pressure, as follows:

$$BE = \gamma \ H_2O \text{ [pounds per cubic foot]} \times \Delta h_w \div \Delta P_a$$

Where Δh_w is the change in elevation in the well associated with atmospheric pressure change (exclusive of other simultaneous effects that may also induce a change) and ΔP_a is the change in atmospheric pressure at the top of the well and land surface. By convention, the BE is dimensionless and ranges from zero to one.

Measurable water level changes in a well may also be due to a number of other factors in addition to changes induced during a pumping test. These are chiefly long-term seasonal trends and earth tides (Halford, 2006). Gontheir (2007) describes the historical methods of determining barometric efficiency. The methods can generally be said to determine an average response with selective application of corrections depending on the overall trends. The methods employ best fit lines to graphical displays of data and numerical

analysis of the data sequence with sign tests to determine when a change is significant and should be applied.

The Site barometer readings were interpolated to the 15 minute background water level data using a custom FORTRAN computer method described in Section 1.3, below. A spreadsheet calculation was used to determine BE corrections throughout the background measurement period from April 23 to May 26. The results for the Dewey Site/Fall River aquifer are shown in Figure A.1-1 and the Burdock Site/Lakota aquifer in Figure A.1-2. The empirical method also determines a trend of rising water levels throughout the calibration period. Corrections for earth tides were not employed because these have demonstrably small amplitudes (i.e., 0.05 psi = 0.1 ft) below the limit of transducer accuracy. The figures illustrate that, after correction for the seasonal increase in water levels, BE's of 0.48 and 0.42 are determined for the Dewey and Burdock sites, respectively. It is noted that the barometer data on the right hand side of Figures A.1-1 and A.1-2 are scaled in reverse order to invert the data and allow superimposition of air pressure trends with ground water levels, as presented in Kruseman and de Ridder (1991).

Computer Applications

Two public domain computer applications were used to analyze the barometric and background water level data collected prior to the pumping tests. However, it was determined that use of either method for correction of actual test drawdown data could introduce more error than working with uncorrected data because background water level variations in the same aquifer at the same time as the test (but at great enough distance to be unaffected by the tests) were not available to validate the correction methods.

The first is a spreadsheet developed by the U.S. Geological Survey (USGS – Halford, 2006). The USGS spreadsheet empirically factors the overall water level response into multiple synthetically generated time series with adjustments to both phase and amplitude of each component (Figure A.1-3). The USGS spreadsheet was used to verify that the Dewey background water level data from April 23 to May 8, 2008, could be closely matched as a series of four components: (1) water level increase at a liner rate [i.e., slope], (2) variation in air pressure as measured with the site barometer, (3) two earth tide components (Figure A.1-4).

The second computer method used is BETCO (Sandia Corporation, 2005), which is publically available at "http://www.sandia.gov/betco/". To correct data, water level, time

and barometric pressure are input and BETCO calculates corrected water level values. As described under Section 1.3 "Data Processing" below, the hourly site barometer data were interpolated to the 15 minute water level measurement frequency. Figure A.1-1 compares the BETCO corrected water levels (as equivalent psi) with the manual BE calculations, and the two methods yield equivalent results, generally within about ± 0.01 psi, except that BETCO did not fully correct the water level for the peak (actually a trough with the vertical axis reversed) in barometric pressure at the middle of the calibration period (i.e., about April 30, 2008, Figure A.1-1).

Summary

As shown in Figure A.1-1, the manual BE method was better than the BETCO computer method for the background calibration period examined. Similar to the USGS method, a difficulty with applying BETCO corrections to the Dewey or Burdock tests is that background wells with similar construction to the pumping test wells are not available to validate the corrections. This would have required drilling a well at each site specifically for background measurements. A further difficulty with the available computer methods is that they do not easily accommodate variable measurement times as input data.

To examine the possible importance of BE corrections, the drawdown phase of the Dewey test (10:30 AM, May 15, 2008 through 12:30 PM May 18, 2008, see Figure 3.1 in the text) was selected for manual correction with a BE of 0.48 relative to the Site barometer over the test period. The corrections were applied after Site barometer data were interpolated to the logarithmically-space time-drawdown data using a custom FORTRAN computer program as described in Section 1.3, below. The maximum effect of the BE correction was to add about 0.2 ft to the water levels at the end of the drawdown phase due to an overall barometric pressure decline of about 15 millibars (i.e., from about 1,030 to 1,015 millibars).

Test interpretations (Theis drawdown, Section 4 in the text) were made with and without the BE corrections for the data at all wells screened in the Fall River aquifer for the Dewey test, and the corrections were found to have no discernable effect on the visual fits to type curves. Because the changes in barometric pressure during the three day constant rate tests at Burdock and Dewey were similar (Figure 3.1 in the text), the above analysis indicates the magnitude of the BE corrections would be no greater for the Burdock test compared to the Dewey test. Therefore, corrections to water level data were not further performed and the test interpretations rely on uncorrected time-drawdown data.

Time-drawdown and Barometer Data Processing

The time-drawdown data from the data loggers consisted of two hours of data at one second intervals followed by 72 or 74 hours of data collected at 10-second intervals, with the sequence repeated for the recovery phase. The WinSitu™ software exported transducer data logger records to ".csv" files with approximately 60,000 to 70,000 records for each well. The time-drawdown data were processed using a custom FORTRAN program employing a template file specifying which date-time records would be written to an output file. The program cycled through the raw data input file and wrote data records to the output file. The template file was prepared to produce logarithmically spaced data with about 30 records per log cycle (in seconds). Due to slight variations in transducer output and the precision of the Microsoft Excel date-time format, there are some ± 1 second variations in the sequences of records from well to well.

The FORTRAN program for drawdown data also converted transducer psi to drawdown in feet using formulas presented in Section 1.1. The reference value for zero drawdown was set to be the average of all psi readings from the start of the data log to the time just prior to test startup.

Two custom FORTRAN programs were also used to interpolate hourly site barometer readings to (1) the evenly spaced background transducer measurements described in Section 1.2.2 and (2) the logarithmically spaced drawdown data described in Section 1.2.3.

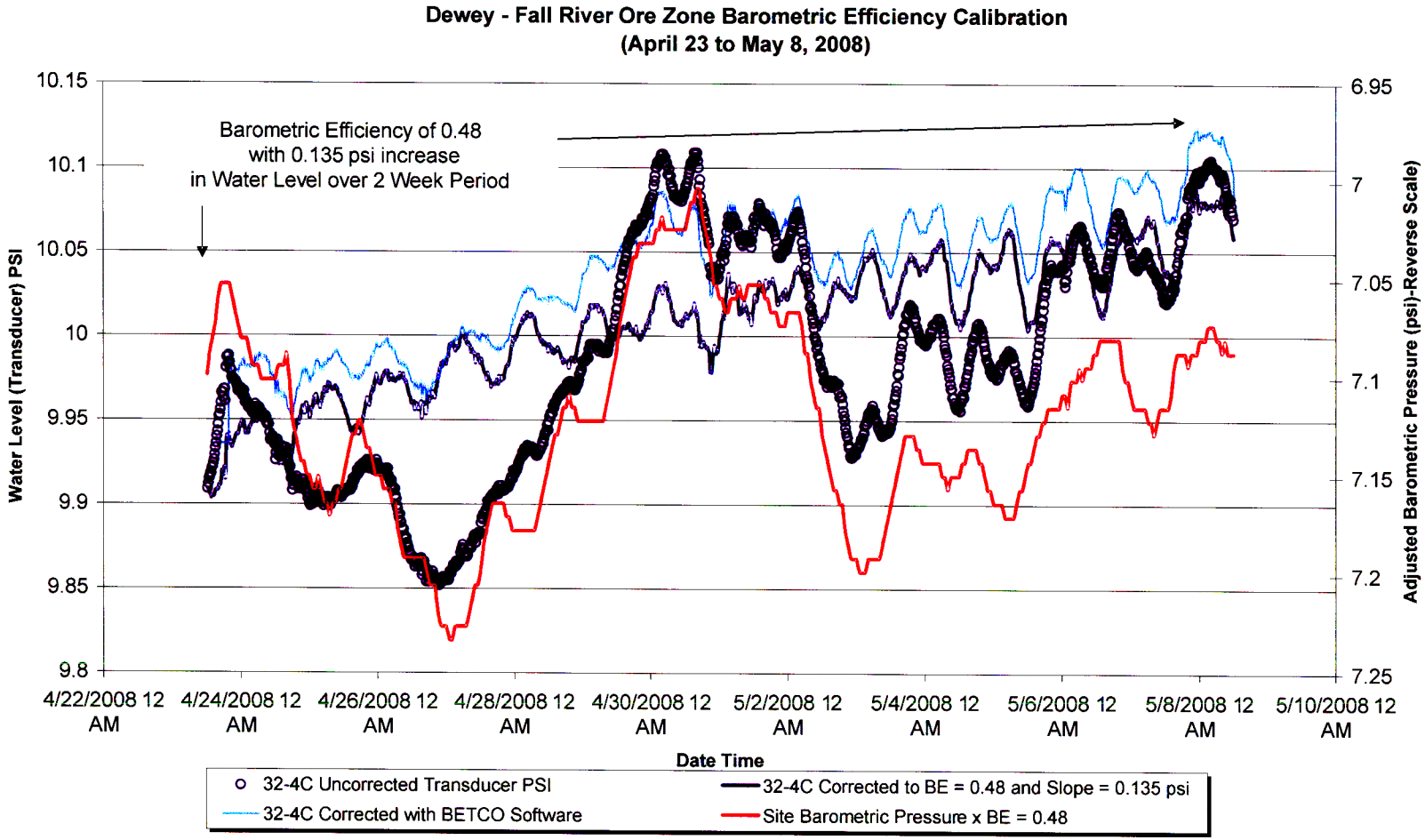

Client	Project	Title	
Knight Piésold CONSULTING	DEWEY-BURDOCK HYDROGEOLOGIC TESTING REPORT	Background Water Level and Site Barometer Readings Dewey/Fall River Barometric Efficiency Calculations (April 23 to May 8 2008)	
	Project No: DV10200279.01	Date: 10/14/08	Appendix A, Figure A.1-1

G:\102\00279.01\A\Reports Specs\KP\All Reports\Work in Progress\Hydrogeologic Testing Report\Appendices\Appendix A\Figure App A_1-1 Dewey BE.xls 10/14/2008

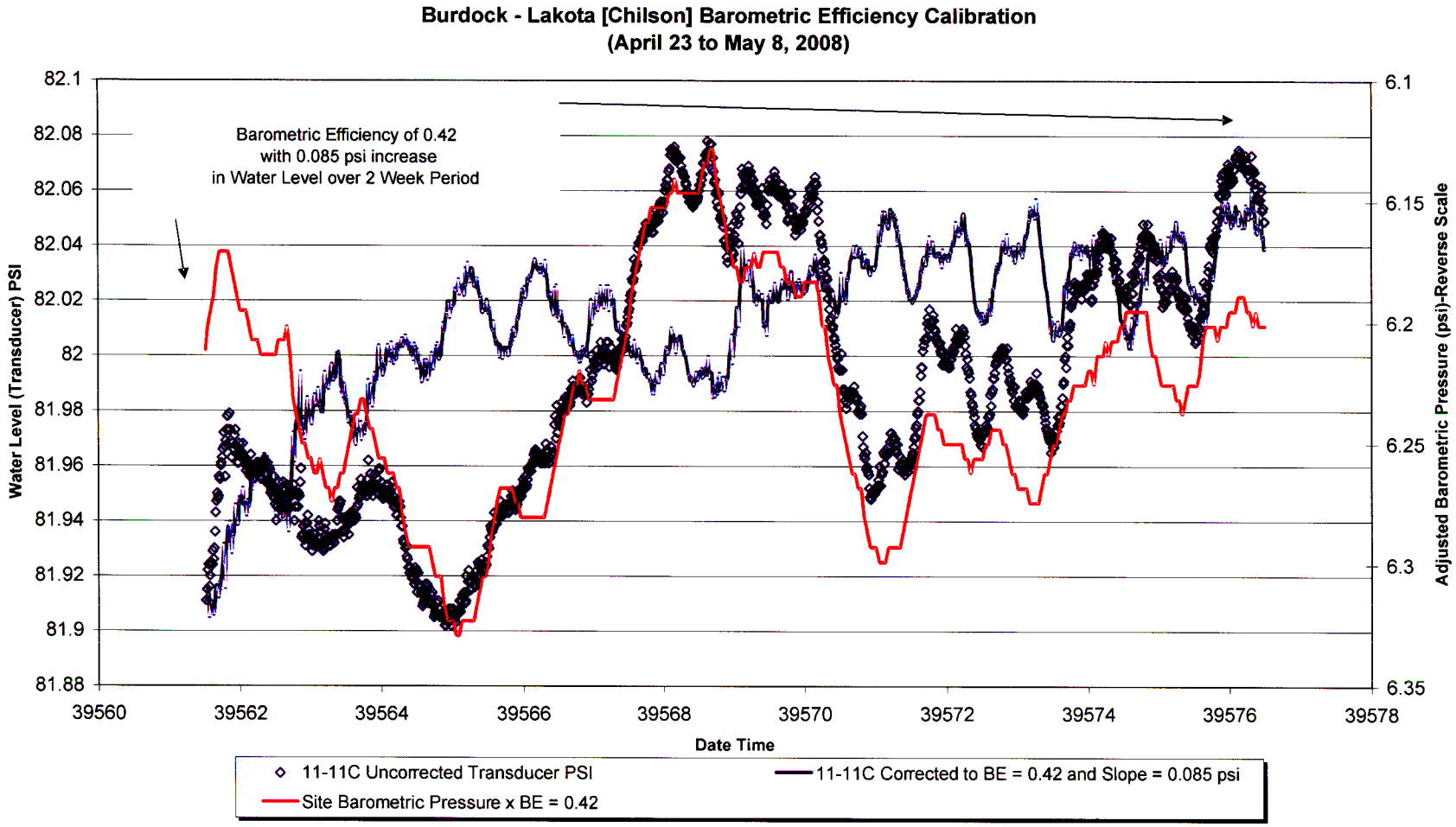

Client	Project	Title	
Knight Piésold CONSULTING	DEWEY-BURDOCK HYDROGEOLOGIC TESTING REPORT	Background Water Level and Site Barometer Readings Burdock/Lakota Barometric Efficiency Calculations (April 23 to May 8 2008)	
	Project No: DV10200279.01	Date: 10/14/08	Appendix A, Figure A.1-2

G:\102\00279.01\A\Reports Specs\KP\All Reports\Work in Progress\Hydrogeologic Testing Report\Appendices\Appendix A\Figure App A_1-2 Burdock BE.xls 10/14/2008

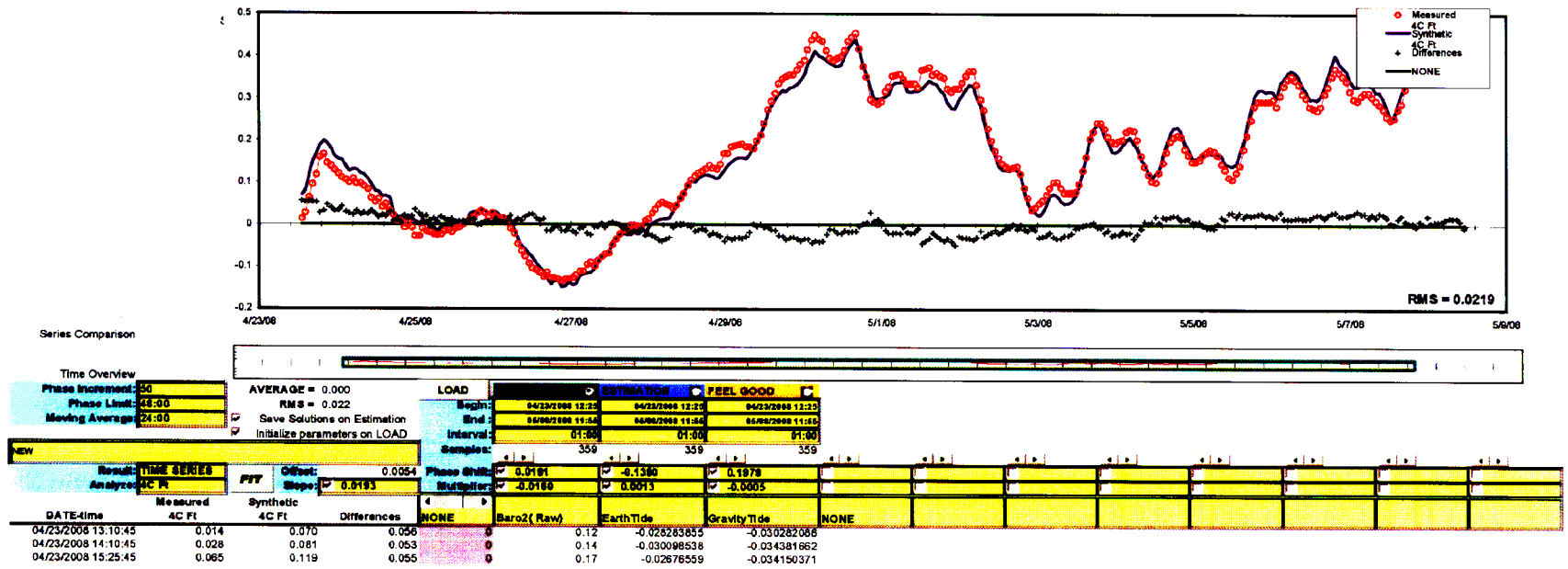

Client	Project	Title	
Knight Piésold CONSULTING	DEWEY-BURDOCK HYDROGEOLOGIC TESTING REPORT	Time-series from USGS Spreadsheet Method (Halford, 2006) for Dewey Observation Well 32-4C Background Measurements and Site Barometer Readings (April 23 to May 8 2008)	
	Project No: DV10200279.01	Date: 10/14/08	Appendix A, Figure A.1-3

G:\102\00279.01\A\Reports Specs\KP\All Reports\Work in Progress\Hydrogeologic Testing Report\Appendices\Appendix A\Figure App A_1-3 Dewey USGS Time Series.xls 10/14/2008

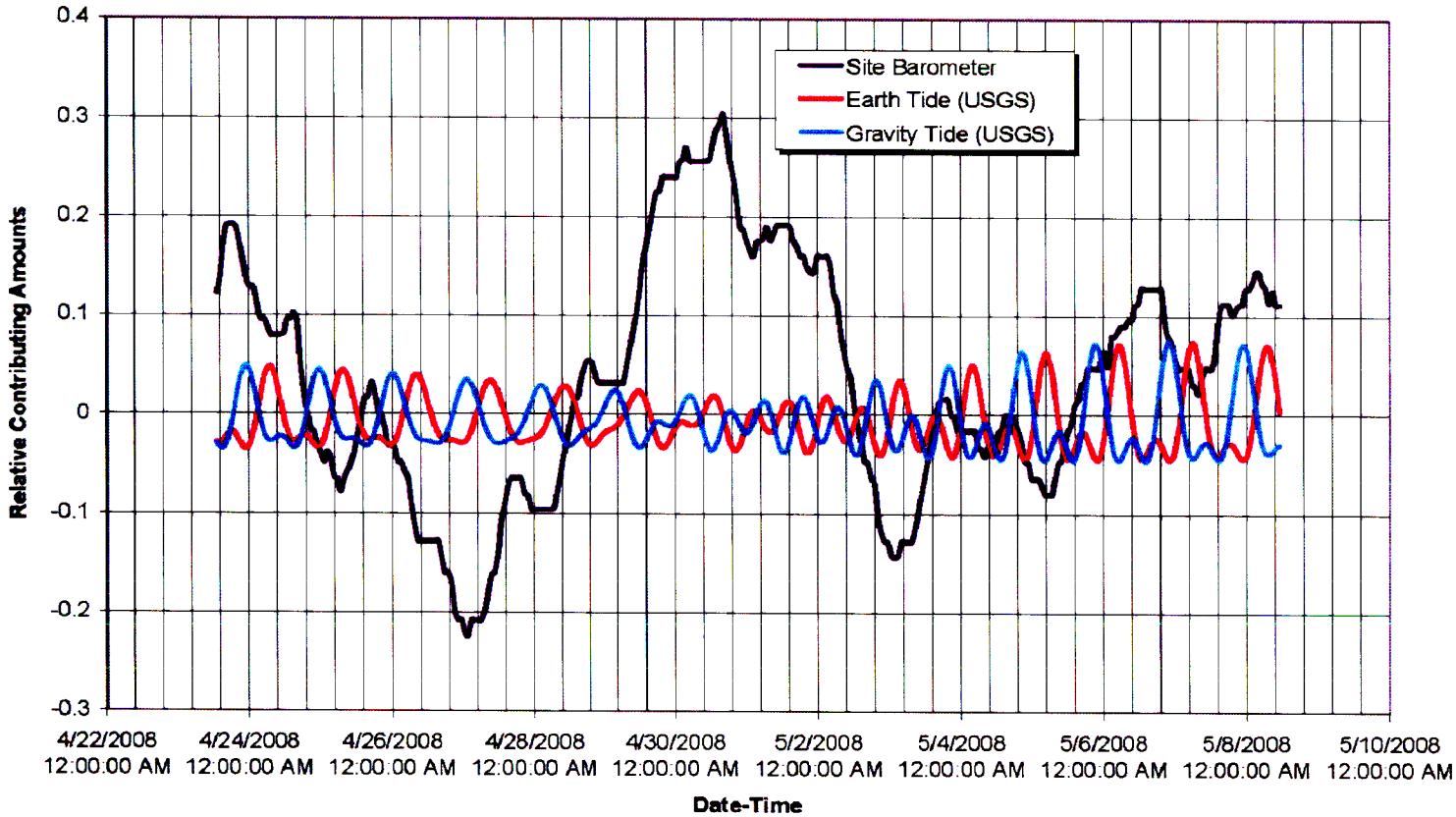

Client	Project	Title	
Knight Piésold CONSULTING	DEWEY-BURDOCK HYDROGEOLOGIC TESTING REPORT	Plotted Time-series Output for Dewey Observation Well 32-4C Background Measurements and Site Barometer Readings (April 23 to May 8 2008)	
	Project No: DV10200279.01	Date: 11/12/08	Appendix A, Figure A.1-4

G:\102\00279.01\A\Reports Specs\KP\All Reports\Work in Progress\Hydrogeologic Testing Report\RevB\Appendix A\Figure App A_1-4 Dewey USGS Time Series.xls 11/12/2008

This page intentionally left blank

Knight Piésold
CONSULTING

Appendix A-2

Overview of Aquifer Test Analysis Procedures and Tools Used

This page intentionally left blank

Overview of Aquifer Test Analysis Procedures and Tools Used

This section describes the methods used to analyze the pump test data from both the Dewey and Burdock tests.

Determining Response

Water levels in each well were measured and recorded with vented In-Situ™ Level TROLL™ pressure transducers with built in data loggers. The pressure ratings for the transducers range from 100 to 300 pounds per square inch (psi). Transducer accuracy (in comparison to known pressure or other pressure reading devices) is stated by the manufacturer to be ±0.1 percent of full-scale reading (i.e., 100 to 300 psi), so the limit of accuracy varies from 0.1 to 0.3 psi, or about 0.2 to 0.7 ft. Transducer sensitivity is stated to be ±0.01 percent of full-scale, resulting in sensitivity limits of about 0.01 to 0.03 psi, or 0.02 to 0.07 ft.

Transducer response figures in the text (Figures 4.2 through 4.4 at Dewey and Figures 5.2 through 5.4 at Burdock) were made from graphs displaying raw transducer data produced directly from Win-Situ™ software provided by In-Situ with the rental transducers. The software should be publically available and can be used to read the binary data files that are provided on CD-ROM in Appendix E. The WinSitu™ software exported transducer data logger records to ".csv" text files with approximately 60,000 to 70,000 records for each well.

The Win-Situ graphs display complete drawdown and recovery data files that exceed the capacity of individual spreadsheets for display and storage. The pumping well data are repeated on some figures for reference as timing marks for the phases of the tests. The data at observation wells also exhibit spikes in the transducer temperature measurements when the data logging shifted from 10 second to 1 second intervals; these can be used to judge within ± 2 hours when the pump was shut off and recovery began at the pumping well.

Precise timing of responses is more clearly analyzed on spreadsheet log-log plots after the data are reduced to 30 points per log cycle (in seconds). The computer method to reduce the large text file to manageable time-drawdown data files is described in Section A.1-3 (above).

Theis Drawdown and Recovery Analysis

Drawdown data collected from all wells were graphically analyzed to determined aquifer properties of transmissivity and storativity using the Theis method (Driscoll, 1986, and numerous other references).

Assumptions for the Theis Method

At observation wells, the Theis method is mathematically valid for all distances and times during the drawdown phase of a test, and there is general agreement about interpretation of deviations of drawdown data from Theis type curves in terms of features such as barrier boundaries and leakage from an overlying leaky aquifer (Kruseman and de Ridder, 1991).

The following simplifying assumptions underlie the Theis analysis (Driscoll, 1986):

- The water-bearing materials have uniform hydraulic conductivity (i.e., are isotropic) within the radius of influence of the well (i.e., the aquifer has infinite extent for the analysis).
- The aquifer is confined and not stratified.
- The aquifer thickness is constant.
- The pumping well is 100 percent efficient.
- The intake portion of the well penetrates the entire aquifer; well diameter is small so well bore storage is negligible.
- The potentiometric surface has no slope (perfectly horizontal).
- Laminar flow exists throughout the radius of influence of the well.

These assumptions are rarely completely satisfied in any pumping test. A first-order violation of the ideal test assumptions for the Powertech pumping test is partial penetration: at Dewey, the lower Fall River pumping and observation wells have 15-foot well screens within an approximate 85-foot sandstone zone within an approximately 160-foot thick sandstone-shale formation; at Burdock the lower Lakota pumping and observation wells have 10-foot well screens within an approximate 35-foot sandstone zone within an approximately 170-foot thick sandstone-shale formation

Secondly, the variegated sandstone-shale lithology clearly responds hydraulically in an anisotropic manner both laterally and vertically. It was determined with Powertech during the test design that an investigation of lateral aquifer anisotropy using four-well

triangulation was not warranted. The test design did investigate vertical anisotropy within each aquifer.

Pumping Test Design and Objectives

As noted in the pumping test work plan, (Knight Piesold, 2008), interpretation of test results with the above non-ideal conditions may result in uncertainties in the estimated transmissivity and storativity values. Reasons for conducting the 2008 tests with conditions contrary to the Theis assumptions were as follows:

- Powertech expects that the operational well field screens will be completed in ore, and the thickness of the ore determines the screen interval.
- The pump test was designed to see what flow could be expected in the wellfield.
- There are multiple ore zones (e.g., three ore zones in the Fall River at Dewey) and each one will have its own well screens, so one ore zone was picked to test.
- At new mines there are usually two pump tests, one to get regional aquifer characteristics and a second one to test the ore zone characteristics.
- The previous TVA tests constitute regional tests and had already been successfully conducted using pumping and observation wells more closely fully penetrating the entire aquifer.
- In comparison with the TVA tests, these newer tests would offer valuable differential diagnostic information.

Theis Analysis Methods

Theis analysis was initially performed in spreadsheets developed by Knight Piesold that allow interactive entry of transmissivity and storativity to calculate the dimensional version of the type curve that matches time-drawdown data (e.g., Figures 4.5 and 5.5 in the text). Theis analysis was expanded to use using automated curve matching in commercial AquiferWin32™ software (ESI, 2003). The software also performed Hantush-Jacob drawdown analysis as described in the text. In automated drawdown analysis samples are weighted as follows: samples before the first response are ignored, and samples after the first occurrence of the barrier or leakage boundary are ignored.

The AquiferWin32™ software was also used to analyze recovery data with the straight-line Theis recovery procedures, with theoretical considerations described in greater detail below. Samples are weighted according to (1) the theoretical criterion that u' be < 0.01, which restricts the data to later-time (to the left on the t/t' axis); and (2) the portion of the recovery before the change in slope due to a barrier or recharge boundary is used. Data

not satisfying u' < 0.01 or obtained after a boundary was encountered were weighted to be ignored.

The analysis of data from the pumping wells is complicated by well losses due to well inefficiency, partial penetration effects, and drawdown modified by borehole storage. This is accounted for in Theis drawdown analyses by fitting just the later time data (at pumping wells) to the type curve. This is done with the AquiferWin32™ software by assigning sample weights to data after the time at which borehole storage becomes negligible.

Driscoll (1986) provides an empirical formula for determining the time at which borehole storage effect become negligible, as follows:

$$tc = 0.6\ (dc^2 - dp^2) \text{ divided by } Q/s$$

Where tc is time in minutes, dc is the inside diameter of the well casing in inches, dp is the outside diameter of the pump column pipe in inches, and Q/s is the specific capacity of the well in gpm per foot of drawdown at time tc. Calculated times were 21 minutes for the pumping well at Dewey and 50 minutes at Burdock.

Theis-Cooper-Jacob Straight-line Analysis

Spreadsheets are published by the U.S. Geological Survey (USGS) with sophisticated programming for the analysis of aquifer test data (Halford and Kuniansky, 2002). These were used for most straight-line analyses of the tests.

Straight-line Drawdown Analysis

A USGS spreadsheet for drawdown analysis with the Cooper-Jacob straight-line approximation was used for the drawdown phase at the pumping wells. Another USGS spreadsheet programmed for Theis Recovery analysis with the straight-line approximation was used to analyze the recovery data at all wells.

The Theis method is linearized with the Cooper-Jacob straight-line approximation (Halford and Kuniansky, 2002). The approximation is only valid at later times as determined by u or u', the relationship of aquifer parameters with distance from the pumping well (r) and elapsed time t or t' (where t and u refer to the time from the start of pumping and t' and u' to the time from the cessation of pumping), as follows:

$$u \text{ or } u' = (r^2 \times S) \div [4 \times T \times (t \text{ or } t')] \text{ and } \quad u \text{ or } u' < 0.01.$$

For a pumping well the distance becomes the radius of the casing (r_c) which is small, and to obtain a time criterion (t_c or t_c' where the straight-line approximation is theoretically valid), the above relationship is inverted by setting u or u' <= 0.01 and S = 1 x 10^{-4}, yielding (Halford and Kuniansky, 2002):

$$4 \times (t \text{ or } t') \times 0.01 >= r_c^2 \times 10^{-4} \div T$$
$$t_c \text{ or } t_c' >= 100 \times r_c^2 \div (4 \times T)$$
$$t_c \text{ or } t_c' >= 25 \times r_c^2 \div T$$

The calculation of t_c or t_c' gives a criterion for theoretically valid data at the pumping well in terms of time, and similarly for u or u' for observation wells. In this report only transmissivity is determined by the straight-line methods. The drawdown phase and Theis or Hantush-Jacob type-curve analysis are used to determine storativity. To calculate u or u' at observation wells, the storativity result from the drawdown phase is used. At the pumping wells, a storativity of 1 x 10^{-4} is assumed.

The USGS spreadsheet allows interactive determination of transmissivity by moving the yellow endpoints of the red line to match the desired slope (see red lines between yellow endpoints on Figures 4.7 and 5.7 in the text). The USGS spreadsheet has been modified to also calculate the value of u or u' and t_c or t_c', and the length of the straight line has been manually set on the figures to approximately correspond to data ranges where the critical values are met. The figures thus indicate the data where the straight-line solutions are theoretically valid, which aids in visually determining which portions of the plots to use for analysis.

The analysis of data from the pumping well is complicated by well losses due to well inefficiency, partial penetration effects, and drawdown modified by borehole storage. The straight-line approximation with the t_c criterion described above is used in the USGS spreadsheet to select the late-time data during the drawdown phase at pumping wells. This is because at later times borehole storage and partial penetration effects are eliminated and change in drawdown and the straight-line slope are due to aquifer transmissivity rather than the fixed offset due to well losses (Halford and Kuniansky, 2002). The USGS spreadsheet determines transmissivity and well efficiency, with the efficiency based on the theoretical drawdown with the assumed storativity of 1.0 x 10^{-4}.

Straight-line Recovery Analysis

The analysis of recovery data involves the measurement of the rise in water levels referred to as residual drawdown. The method determines the $\Delta s'$, the change in residual drawdown over one log cycle of t/t', where t is the time from the start of pumping and t' is the time from the cessation of pumping. Figures 4.7 and 5.7 in the text illustrate the Theis recovery analysis at the pumping wells. On each recovery analysis figure the data range where the t_c' or u' criteria is satisfied (see red lines between yellow endpoints on Figures 4.7 and 5.7 in the text) are indicated together with the transmissivity reported by the USGS spreadsheet.

Distance Drawdown Analysis

Distance-drawdown analysis (Driscoll, 1986) was performed to determine average aquifer parameters using all appropriate observation wells simultaneously and also to determine a pumping well efficiency. The distance drawdown analysis relies on the same Cooper-Jacob straight-line approximation as described above, although according to Driscoll (1986) the value of u can be as great as 0.05. The value of u is calculated using the storativity of the observation wells determined in the Theis drawdown analysis. The aquifer parameters are determined by calculating Δs, the change in drawdown along the straight line over one log cycle, and r_0 which is the intercept at zero drawdown.

On a linear graph (see top portions of Figures 4.8 and 5.8 in the text), plotting the maximum drawdown in observation wells at the same time should map a profile of the cone of depression surrounding the pumped well. On a semi-log graph (bottom portions of Figures 4.8 and 5.8 in the text) there should theoretically be a straight line through the data points, except at the greatest distance from the pumping well where u is likely to be > 0.05 (Driscoll, 1986).

Knight Piésold
CONSULTING

Appendix B
Dewey Test Supplemental Information

Appendix B-1: Well Completion Diagrams

Appendix B-2: Time and Water Level Data Values Used in Pumping Test Analysis: Dewey Test, Drawdown Data

Appendix B-3: Time and Water Level Data Values Used in Pumping Test Analysis: Dewey Test, Recover Data

Appendix B-4: Additional Aquifer Parameter Determinations

This page intentionally left blank

Knight Piésold
CONSULTING

Appendix B-1
Well Completion Diagrams

This page intentionally left blank

POWERTECH WELL AND PUMP DATA

Location of Well Dewey, SD	Drilling Contractor Davis Drilling	Driller Tony	Well Name DB07-32-3C
County Custer	Type of Rig	Drilling Fluid mud	Well Depth 600'
LAT 4815593N	LONG 578732E	Elevation 3635"	Datum point from which all measurements are taken

Screened Monitoring Well Completion Detail

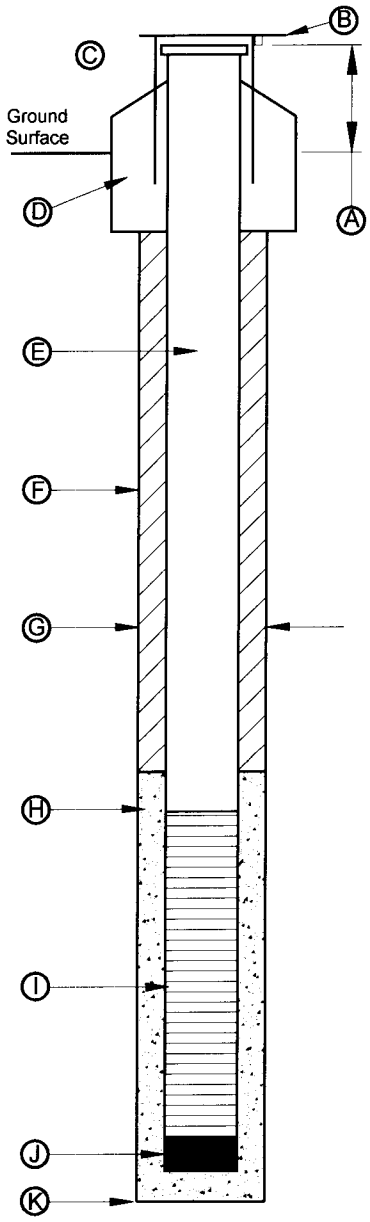

Screened Well No.

A. Stick-up Length 2.0'
B. Key No. NA
C. Protective Casing
Diameter NA
Material NA
Length NA
Depth to Bottom NA
D. Surface Completion
Diameter NA
Depth NA
Material NA
E. Well Casing Data
Diameter 6" ID
Material PVC
Length 587'
Weight SCH 40
Depth to Bottom 585'
F. Grout cement Date 11/29/07
Depth to Top 0'
Depth to Bottom 587'
Material sulfate resis. cement
Density 15.1 lb/gal
Volume 21.5 bbls
% Excess 70
Method of Installation displacement
Depth to Cement in Casing 505'
Return Constant ☐ Yes ☒ No
Volume of Grout Return 0
G. Borehole Diameter
Drilling Dates 8.75" 11/28/07
H. Pack Type/Size NA Date NA
Depth to Top NA
Depth to Bottom
Material
Method of Installation
Gradation
I. Screen Date 1/27/08
Depth to Top 585-600"
Depth to Bottom
Manufacturer
Material PVC
Slot .01"
J. Bottom Cap
Material PVC
Length 1"
Driller Tommy
Boring Depth 630"

Additional Information

Method of Drilling Date: 11/27/07
☐ Cabel Tool ☐ Hollow Rod
☒ Direct Rotary ☐ Air Rotary
☐ Bucket Auger ☐ Reverse Rotary
☐ Flight Auger ☐ Jetted
☐ Dug ☐ Driven
☐ Other mud rotary

Use
☐ Domestic ☐ Public Supply
☐ Industrial ☐ Irrigation
☐ Municipal ☐ Commercial
☐ Test Well ☐ Heating or Cooling
☒ Monitoring
☐ Other

One well volume (V) = gallons
Initial Development Water
Water Level (TIC)
Well Depth
Color
Odor
Clarity
Developed By
Date
Well Development Date
Description of Development Technique

Pump
Date Installed Type
Manufacturer Model No.
H.P. Volts
Capacity
Depth of Pump Intake Setting
No. of Stages
☐ Oil ☐ Water Lubrication
Power Source
Material of drop pipe
Bowls
Shafting Impellors
Bowl Diameter
Column Pipe Diameter Length
Modification

Geophysical Logs Run Gamma, Resistivity, SP, ran 11/27/07

Water Quality
Sample taken? ☐ Yes ☐ No
Where analyzed?

Date well completed 1/27/08

******Mechanical Integrity Test******

PSI Increments		Calibration Date of Gage	
PSI Full Scale			
Test Run By	Stan Davis, Len Eakin	Date Test Run	1/25/08
Time Beginning of Test	800	Time End of Test	1000
Initial Pressure	35.0 PSIG	Initial Fluid Level	4.0 inches
Final Pressure	35.0 PSIG	Final Fluid Level	4.0inches

WELL DEVELOPMENT RECORD – PARAMETER MEASUREMENTS

Well No.	Time	Total Volume Withdrawal		pH	Conductivity (ms/cm)	Temp (°C)	Turbidity (NTU)	Comments
		Gallons	Borehole Volume					
32-3C	1400						appears cl.	1/27/08 well developed
	1425							water cleared up within 5 minutes
								approx 50 gpm while pumping

POWERTECH WELL AND PUMP DATA

Location of Well Dewey, SD	Drilling Contractor Davis Drilling	Driller Tony	Well Name DB07-32-5
County Custer	Type of Rig	Drilling Fluid mud	Well Depth 608'
LAT 4815588N	LONG 578650E	Elevation 3628'	Datum point from which all measurements are taken

Screened Monitoring Well Completion Detail

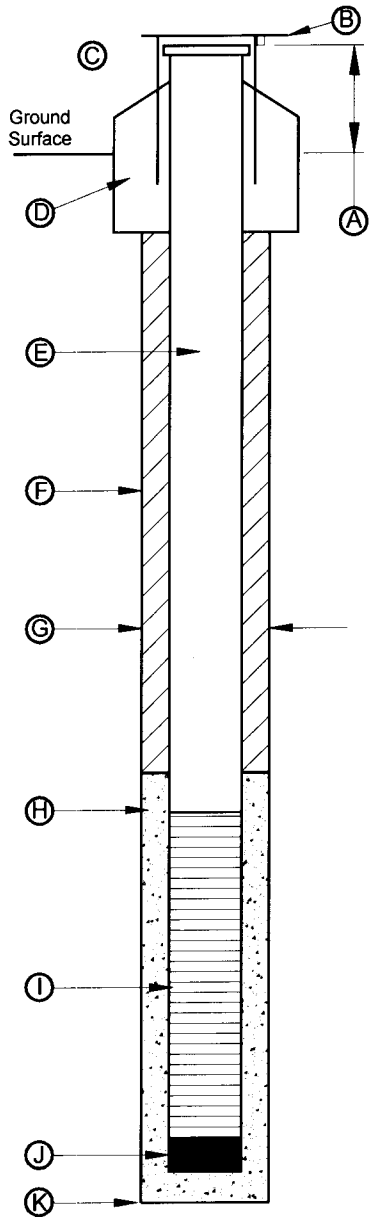

Screened Well No.

A. Stick-up Length 2.0'

B. Key No. NA

C. Protective Casing
- Diameter NA
- Material NA
- Length NA
- Depth to Bottom NA

D. Surface Completion
- Diameter NA
- Depth NA
- Material NA

E. Well Casing Data
- Diameter 4" ID
- Material PVC
- Length 595'
- Weight SCH 40
- Depth to Bottom 593'

F. Grout cement Date 11/17/07
- Depth to Top 0'
- Depth to Bottom 593'
- Material sulfate resis. cement
- Density 15.2b/gal
- Volume 13.4 bbls
- % Excess 60
- Method of Installation displacement
- Depth to Cement in Casing 520'
- Return Constant ☐ Yes ☒ No
- Volume of Grout Return 0

G. Borehole Diameter
- Drilling Dates 6.25" 11/17/07

H. Pack Type/Size NA Date NA
- Depth to Top NA
- Depth to Bottom
- Material
- Method of Installation
- Gradation

I. Screen Date 2/6/08
- Depth to Top 593-608'
- Depth to Bottom
- Manufacturer
- Material PVC
- Slot .01"

J. Bottom Cap
- Material PVC
- Length 1"
- Driller Tommy

Boring Depth 634'

Additional Information

Method of Drilling Date: 11/17/07

☐ Cabel Tool ☐ Hollow Rod
☒ Direct Rotary ☐ Air Rotary
☐ Bucket Auger ☐ Reverse Rotary
☐ Flight Auger ☐ Jetted
☐ Dug ☐ Driven
☐ Other mud rotary

Use

☐ Domestic ☐ Public Supply
☐ Industrial ☐ Irrigation
☐ Municipal ☐ Commercial
☐ Test Well ☐ Heating or Cooling
☒ Monitoring
☐ Other

One well volume (V) = gallons

Initial Development Water
Water Level (TIC)
Well Depth
Color
Odor
Clarity
Developed By
Date
Well Development Date
Description of Development Technique

Pump

Date Installed Type
Manufacturer Model No.
H.P. Volts
Capacity
Depth of Pump Intake Setting
No. of Stages
☐ Oil ☐ Water Lubrication
Power Source
Material of drop pipe
Bowls
Shafting Impellors
Bowl Diameter
Column Pipe Diameter Length
Modification

Geophysical Logs Run Gamma, Resistivity, SP, ran 11/17/07

******Mechanical Integrity Test******

PSI Increments		Calibration Date of Gage	
PSI Full Scale			
Test Run By	Stan Davis, Len Eakin	Date Test Run	2/5/08
Time Beginning of Test	0900	Time End of Test	1100
Initial Pressure	35.0 PSIG	Initial Fluid Level	5.0 inches
Final Pressure	35.0 PSIG	Final Fluid Level	5.0inches

Water Quality
Sample taken? ☐ Yes ☐ No
Where analyzed?

Date well completed 2/6/08

WELL DEVELOPMENT RECORD – PARAMETER MEASUREMENTS

Well No.	Time	Total Volume Withdrawal		pH	Conductivity (ms/cm)	Temp (°C)	Turbidity (NTU)	Comments
		Gallons	Borehole Volume					
32-5	1500						appears cl.	2/6/08 well developed
	1535							water cleared up within 5 minutes
								approx 20 gpm while pumping
								220psi kickoff, 130psi sustained

POWERTECH WELL AND PUMP DATA

Location of Well Dewey, SD	Drilling Contractor Davis Drilling	Driller Tony	Well Name DB07-32-4C
County Custer	Type of Rig	Drilling Fluid mud	Well Depth 595'
LAT 4815507N	LONG 578846E	Elevation 3640'	Datum point from which all measurements are taken

Screened Monitoring Well Completion Detail

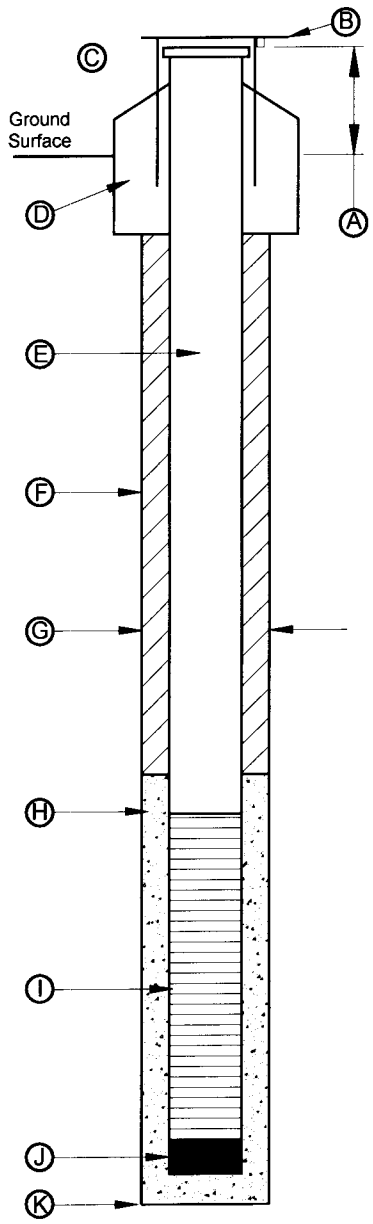

Screened Well No.

A. Stick-up Length 2.0'
B. Key No. NA
C. Protective Casing
Diameter NA
Material NA
Length NA
Depth to Bottom NA
D. Surface Completion
Diameter NA
Depth NA
Material NA
E. Well Casing Data
Diameter 4" ID
Material PVC
Length 582'
Weight SCH 40
Depth to Bottom 580'
F. Grout cement Date 12/5/07
Depth to Top 0'
Depth to Bottom 582'
Material sulfate resis. cement
Density 15.1 lb/gal
Volume 17.4 bbls
% Excess 70
Method of Installation displacement
Depth to Cement in Casing 480'
Return Constant ☐ Yes ☒ No
Volume of Grout Return 0
G. Borehole Diameter
Drilling Dates 6.25" 12/4/07
H. Pack Type/Size NA Date NA
Depth to Top NA
Depth to Bottom
Material
Method of Installation
Gradation
I. Screen Date 2/4/08
Depth to Top 580-595'
Depth to Bottom
Manufacturer
Material PVC
Slot .01"
J. Bottom Cap
Material PVC
Length 1"
Driller Tommy
Boring Depth 630'

Additional Information

Method of Drilling Date: 12/4/07
☐ Cabel Tool ☐ Hollow Rod
☒ Direct Rotary ☐ Air Rotary
☐ Bucket Auger ☐ Reverse Rotary
☐ Flight Auger ☐ Jetted
☐ Dug ☐ Driven
☐ Other mud rotary

Use
☐ Domestic ☐ Public Supply
☐ Industrial ☐ Irrigation
☐ Municipal ☐ Commercial
☐ Test Well ☐ Heating or Cooling
☒ Monitoring
☐ Other

One well volume (V) = gallons
Initial Development Water
Water Level (TIC)
Well Depth
Color
Odor
Clarity
Developed By
Date
Well Development Date
Description of Development Technique

Pump
Date Installed Type
Manufacturer Model No.
H.P. Volts
Capacity
Depth of Pump Intake Setting
No. of Stages
☐ Oil ☐ Water Lubrication
Power Source
Material of drop pipe
Bowls
Shafting Impellors
Bowl Diameter
Column Pipe Diameter Length
Modification

Geophysical Logs Run Gamma, Resistivity, SP, ran 12/4/07

Water Quality
Sample taken? ☐ Yes ☐ No
Where analyzed?

Date well completed 2/4/08

******Mechanical Integrity Test******

PSI Increments		Calibration Date of Gage	
PSI Full Scale			
Test Run By	Stan Davis, Len Eakin	Date Test Run	1/28/08
Time Beginning of Test	1000	Time End of Test	1200
Initial Pressure	35.0 PSIG	Initial Fluid Level	6.0 inches
Final Pressure	35.0 PSIG	Final Fluid Level	6.0inches

WELL DEVELOPMENT RECORD – PARAMETER MEASUREMENTS

Well No.	Time	Total Volume Withdrawal		pH	Conductivity (ms/cm)	Temp (°C)	Turbidity (NTU)	Comments
		Gallons	Borehole Volume					
32-4C	1400						appears cl.	2/4/08 well developed
	1425							water cleared up within 5 minutes
								approx 30 gpm while pumping

POWERTECH WELL AND PUMP DATA

Location of Well Dewey, SD	Drilling Contractor Davis Drilling	Driller Tony	Well Name DE07-29-7
County Custer	Type of Rig	Drilling Fluid mud	Well Depth 650'
LAT 4816313N	LONG 578652E	Elevation 3703'	Datum point from which all measurements are taken

Screened Monitoring Well Completion Detail

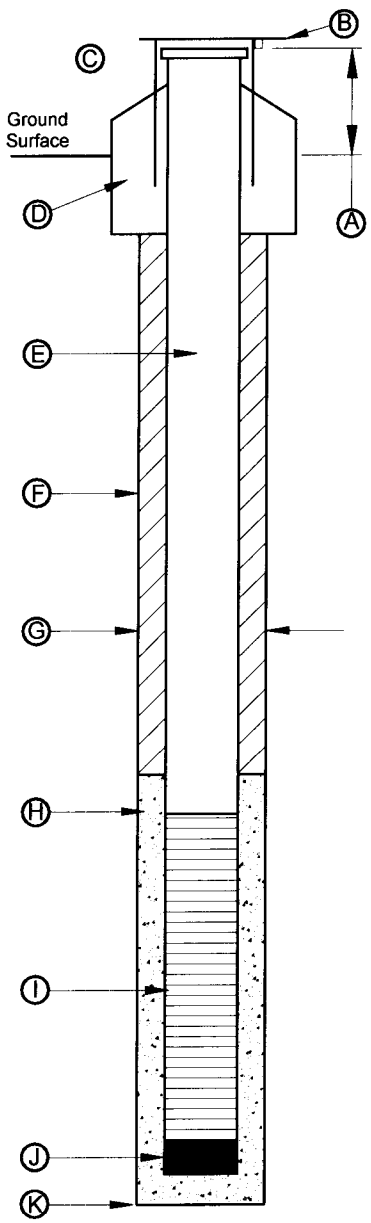

Screened Well No.

A. Stick-up Length 2.0'

B. Key No. NA

C. Protective Casing
- Diameter NA
- Material NA
- Length NA
- Depth to Bottom NA

D. Surface Completion
- Diameter NA
- Depth NA
- Material NA

E. Well Casing Data
- Diameter 4" ID
- Material PVC
- Length 637'
- Weight SCH 40
- Depth to Bottom 635'

F. Grout cement Date 11/20/07
- Depth to Top 0'
- Depth to Bottom 593'
- Material sulfate resis. cement
- Density 15.2b/gal
- Volume 17.2 bbls
- % Excess 70
- Method of Installation displacement
- Depth to Cement in Casing 550'
- Return Constant ☐ Yes ☒ No
- Volume of Grout Return 0

G. Borehole Diameter
- Drilling Dates 6.25" 11/20/07

H. Pack Type/Size NA Date NA
- Depth to Top NA
- Depth to Bottom
- Material
- Method of Installation
- Gradation

I. Screen Date 2/8/08
- Depth to Top 635-650'
- Depth to Bottom
- Manufacturer
- Material PVC
- Slot .01"

J. Bottom Cap
- Material PVC
- Length 1"
- Driller Tony

Boring Depth 660'

Additional Information

Method of Drilling Date: 11/20/07

☐ Cabel Tool ☐ Hollow Rod
☒ Direct Rotary ☐ Air Rotary
☐ Bucket Auger ☐ Reverse Rotary
☐ Flight Auger ☐ Jetted
☐ Dug ☐ Driven
☐ Other mud rotary

Use

☐ Domestic ☐ Public Supply
☐ Industrial ☐ Irrigation
☐ Municipal ☐ Commercial
☐ Test Well ☐ Heating or Cooling
☒ Monitoring
☐ Other

One well volume (V) = gallons

Initial Development Water
Water Level (TIC) ____
Well Depth ____
Color ____
Odor
Clarity ____
Developed By ____
Date ____
Well Development Date ____
Description of Development Technique

Pump

Date Installed ____ Type ____
Manufacturer ____ Model No. ____
H.P. ____ Volts ____
Capacity ____
Depth of Pump Intake Setting ____
No. of Stages ____
☐ Oil ☐ Water Lubrication
Power Source ____
Material of drop pipe ____
Bowls ____
Shafting ____ Impellors ____
Bowl Diameter ____
Column Pipe Diameter ____ Length ____
Modification ____

Geophysical Logs Run Gamma, Resistivity, SP, ran 11/20/07

******Mechanical Integrity Test******

PSI Increments		Calibration Date of Gage	
PSI Full Scale			
Test Run By	Stan Davis, Len Eakin	Date Test Run	2/7/08
Time Beginning of Test	0930	Time End of Test	1130
Initial Pressure	35.0 PSIG	Initial Fluid Level	5.0 inches
Final Pressure	35.0 PSIG	Final Fluid Level	5.0inches

Water Quality
Sample taken? ☐ Yes ☐ No
Where analyzed?

Date well completed 2/8/08

WELL DEVELOPMENT RECORD – PARAMETER MEASUREMENTS

Well No.	Time	Total Volume Withdrawal		pH	Conductivity (ms/cm)	Temp (°C)	Turbidity (NTU)	Comments
		Gallons	Borehole Volume					
29-7	1500						appears cl.	2/8/08 well developed
	1530							water cleared up within 3 minutes
								less than 1 gpm while pumping
								100psi kickoff, 50psi sustained
								v. slow recharge

POWERTECH WELL AND PUMP DATA

Location of Well Dewey, SD	Drilling Contractor Davis Drilling	Driller Tony	Well Name DB07-32-9C
County Custer	Type of Rig	Drilling Fluid mud	Well Depth 505'
LAT 4815586N	LONG 578744E	Elevation 3683"	Datum point from which all measurements are taken

Screened Monitoring Well Completion Detail

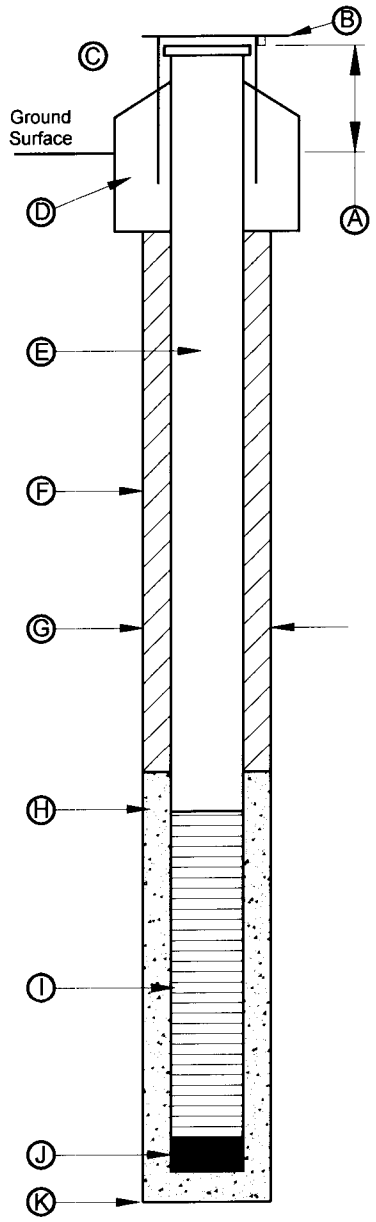

Screened Well No.

A. Stick-up Length 2.0'
B. Key No. NA
C. Protective Casing
Diameter NA
Material NA
Length NA
Depth to Bottom NA
D. Surface Completion
Diameter NA
Depth NA
Material NA
E. Well Casing Data
Diameter 6" ID
Material PVC
Length 492'
Weight SCH 40
Depth to Bottom 490'
F. Grout cement Date 2/20/08
Depth to Top 0'
Depth to Bottom 491'
Material sulfate resis. cement
Density 15.2 lb/gal
Volume 24.8 bbls
% Excess 50
Method of Installation displacement
Depth to Cement in Casing 370'
Return Constant ☒ Yes ☐ No
Volume of Grout Return 8 bbls
G. Borehole Diameter
Drilling Dates 6.25" 1/15/08
H. Pack Type/Size NA Date NA
Depth to Top NA
Depth to Bottom
Material
Method of Installation
Gradation
I. Screen Date 3/10/08
Depth to Top 490-505"
Depth to Bottom
Manufacturer
Material PVC
Slot .01"
J. Bottom Cap
Material PVC
Length 1"
Driller Tommy
Boring Depth "

Additional Information Dewey pump test site - upper Fall River sand lens (not in pumped lens)

Method of Drilling Date: 1/15/08
☐ Cabel Tool ☐ Hollow Rod
☒ Direct Rotary ☐ Air Rotary
☐ Bucket Auger ☐ Reverse Rotary
☐ Flight Auger ☐ Jetted
☐ Dug ☐ Driven
☐ Other mud rotary

Use
☐ Domestic ☐ Public Supply
☐ Industrial ☐ Irrigation
☐ Municipal ☐ Commercial
☐ Test Well ☐ Heating or Cooling
☒ Monitoring
☐ Other

One well volume (V) = gallons
Initial Development Water
Water Level (TIC)
Well Depth
Color
Odor
Clarity
Developed By
Date
Well Development Date
Description of Development Technique

Pump
Date Installed Type
Manufacturer Model No.
H.P. Volts
Capacity
Depth of Pump Intake Setting
No. of Stages
☐ Oil ☐ Water Lubrication
Power Source
Material of drop pipe
Bowls
Shafting Impellors
Bowl Diameter
Column Pipe Diameter Length
Modification

Geophysical Logs Run Gamma, Resistivity, SP, ran 1/15/08

******Mechanical Integrity Test******

PSI Increments		Calibration Date of Gage	
PSI Full Scale			
Test Run By	Stan Davis, Len Eakin	Date Test Run	3/9/08
Time Beginning of Test	0800	Time End of Test	1000
Initial Pressure	35.0 PSIG	Initial Fluid Level	4.0 inches
Final Pressure	35.0 PSIG	Final Fluid Level	4.0inches

Water Quality
Sample taken? ☐ Yes ☐ No
Where analyzed?

Date well completed 3/10/08

WELL DEVELOPMENT RECORD – PARAMETER MEASUREMENTS

Well No.	Time	Total Volume Withdrawal		pH	Conductivity (ms/cm)	Temp (°C)	Turbidity (NTU)	Comments
		Gallons	Borehole Volume					
32-9C	1400						dirty-clear.	3/10/08 well developed
	1430							water cleared up after 20 minutes very black water and sand coming out
								approx 40-45 gpm while pumping
								220psi kickoff 90psi sustained
								6gpm flow by itself
								screened interval in Fall River formation

POWERTECH WELL AND PUMP DATA

Location of Well Dewey, SD	Drilling Contractor Davis Drilling	Driller Tony	Well Name DB07-32-10
County Custer	Type of Rig	Drilling Fluid mud	Well Depth 730'
LAT 4815611N	LONG 578729E	Elevation 3655"	Datum point from which all measurements are taken

Screened Monitoring Well Completion Detail

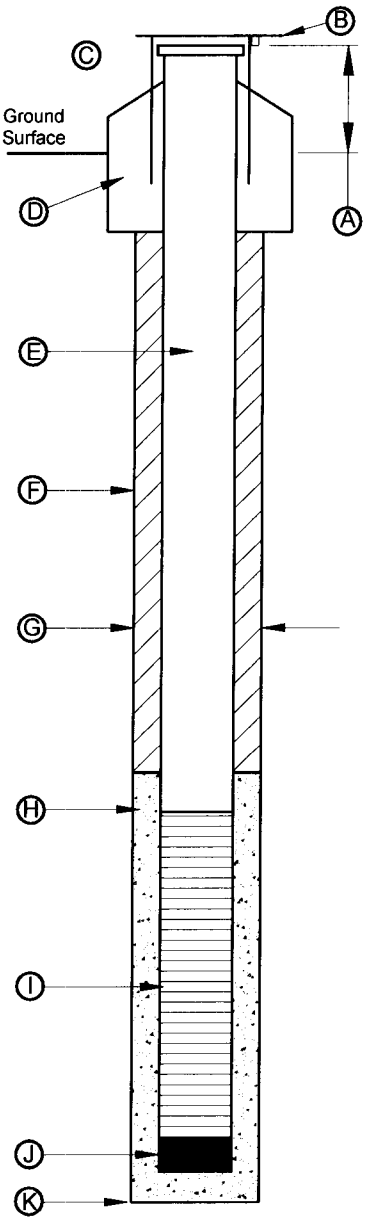

Screened Well No.

A. Stick-up Length 2.0'
B. Key No. NA
C. Protective Casing
Diameter NA
Material NA
Length NA
Depth to Bottom NA
D. Surface Completion
Diameter NA
Depth NA
Material NA
E. Well Casing Data
Diameter 6" ID
Material PVC
Length 717'
Weight SCH 40
Depth to Bottom 715'
F. Grout cement Date 1/28/08
Depth to Top 0'
Depth to Bottom 730'
Material sulfate resis. cement
Density 15.3 lb/gal
Volume 19.1 bbls
% Excess 70
Method of Installation displacement
Depth to Cement in Casing 615'
Return Constant ☒ Yes ☐ No
Volume of Grout Return 1 bbls
G. Borehole Diameter
Drilling Dates 8.75" ream 1/28/08
H. Pack Type/Size NA Date NA
Depth to Top NA
Depth to Bottom
Material
Method of Installation
Gradation
I. Screen Date 3/11/08
Depth to Top 715-730"
Depth to Bottom
Manufacturer
Material PVC
Slot .01"
J. Bottom Cap
Material PVC
Length 1"
Driller Tommy
Boring Depth "

Additional Information

Method of Drilling Date: 1/26/08
☐ Cabel Tool ☐ Hollow Rod
☒ Direct Rotary ☐ Air Rotary
☐ Bucket Auger ☐ Reverse Rotary
☐ Flight Auger ☐ Jetted
☐ Dug ☐ Driven
☐ Other mud rotary

Use
☐ Domestic ☐ Public Supply
☐ Industrial ☐ Irrigation
☐ Municipal ☐ Commercial
☐ Test Well ☐ Heating or Cooling
☒ Monitoring
☐ Other

One well volume (V) = gallons
Initial Development Water
Water Level (TIC)
Well Depth
Color
Odor
Clarity
Developed By
Date
Well Development Date
Description of Development Technique

Pump
Date Installed Type
Manufacturer Model No.
H.P. Volts
Capacity
Depth of Pump Intake Setting
No. of Stages
☐ Oil ☐ Water Lubrication
Power Source
Material of drop pipe
Bowls
Shafting Impellors
Bowl Diameter
Column Pipe Diameter Length
Modification

Geophysical Logs Run Gamma, Resistivity, SP, ran 1/26/08

******Mechanical Integrity Test******

PSI Increments		Calibration Date of Gage	
PSI Full Scale			
Test Run By	Stan Davis, Len Eakin	Date Test Run	3/10/08
Time Beginning of Test	1200	Time End of Test	1405
Initial Pressure	35.0 PSIG	Initial Fluid Level	6.0 inches
Final Pressure	35.0 PSIG	Final Fluid Level	6.0inches

Water Quality
Sample taken? ☐ Yes ☐ No
Where analyzed?

Date well completed 3/11/08

WELL DEVELOPMENT RECORD – PARAMETER MEASUREMENTS

Well No.	Time	Total Volume Withdrawal		pH	Conductivity (ms/cm)	Temp (°C)	Turbidity (NTU)	Comments
		Gallons	Borehole Volume					
32-10	1600						v. dirty	3/11/08 well developed
	1630							water v. sl. dirty at end of test
								approx 2 gpm while pumping
								110psi kickoff decreases quickly to 2gpm at 50psi
								well recharges quickly when pump shut off
								screened interval in Lakota formation

POWERTECH WELL AND PUMP DATA

Location of Well Dewey, SD	Drilling Contractor Davis Drilling	Driller Tony	Well Name DE07-32-11
County Custer	Type of Rig	Drilling Fluid mud	Well Depth 930'
LAT 4815572N	LONG 578734E	Elevation 3664"	Datum point from which all measurements are taken

Screened Monitoring Well Completion Detail

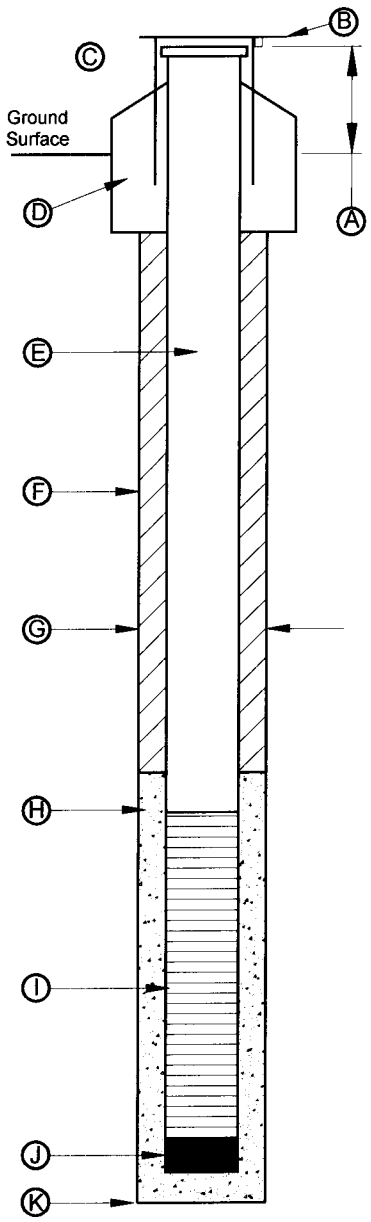

Screened Well No.

A. Stick-up Length 2.0'
B. Key No. NA
C. Protective Casing
Diameter NA
Material NA
Length NA
Depth to Bottom NA
D. Surface Completion
Diameter NA
Depth NA
Material NA
E. Well Casing Data
Diameter 6" ID
Material PVC
Length 912'
Weight SCH 40
Depth to Bottom 910'
F. Grout cement Date 2/12/08
Depth to Top 0'
Depth to Bottom 911'
Material sulfate resis. cement
Density 15.2 lb/gal
Volume 55.0 bbls
% Excess 70
Method of Installation displacement
Depth to Cement in Casing 760'
Return Constant ☒ Yes ☐ No
Volume of Grout Return 8 bbls
G. Borehole Diameter
Drilling Dates 6.25" 2/7/08
H. Pack Type/Size NA Date NA
Depth to Top NA
Depth to Bottom
Material
Method of Installation
Gradation
I. Screen Date 3/8/08
Depth to Top 910-930"
Depth to Bottom
Manufacturer
Material PVC
Slot .01"
J. Bottom Cap
Material PVC
Length 1"
Driller Tommy
Boring Depth "

Additional Information

Method of Drilling Date: 2/7/08

☐ Cabel Tool ☐ Hollow Rod
☒ Direct Rotary ☐ Air Rotary
☐ Bucket Auger ☐ Reverse Rotary
☐ Flight Auger ☐ Jetted
☐ Dug ☐ Driven
☐ Other mud rotary

Use

☐ Domestic ☐ Public Supply
☐ Industrial ☐ Irrigation
☐ Municipal ☐ Commercial
☐ Test Well ☐ Heating or Cooling
☒ Monitoring
☐ Other

One well volume (V) = gallons
Initial Development Water
Water Level (TIC)
Well Depth
Color
Odor
Clarity
Developed By
Date
Well Development Date
Description of Development Technique

Pump
Date Installed Type
Manufacturer Model No.
H.P. Volts
Capacity
Depth of Pump Intake Setting
No. of Stages
☐ Oil ☐ Water Lubrication
Power Source
Material of drop pipe
Bowls
Shafting Impellors
Bowl Diameter
Column Pipe Diameter Length
Modification

Geophysical Logs Run Gamma, Resistivity, SP, ran 2/8/08

Water Quality
Sample taken? ☐ Yes ☐ No
Where analyzed?

Date well completed 3/8/08

******Mechanical Integrity Test******

PSI Increments		Calibration Date of Gage	
PSI Full Scale			
Test Run By	Stan Davis, Len Eakin	Date Test Run	3/5/08
Time Beginning of Test	0830	Time End of Test	1000
Initial Pressure	35.0 PSIG	Initial Fluid Level	4.0 inches
Final Pressure	35.0 PSIG	Final Fluid Level	4.0inches

WELL DEVELOPMENT RECORD – PARAMETER MEASUREMENTS

Well No.	Time	Total Volume Withdrawal		pH	Conductivity (ms/cm)	Temp (°C)	Turbidity (NTU)	Comments
		Gallons	Borehole Volume					
32-11	1200						appears cl.	3/8/08 well developed
	1230							water cleared up within 5 minutes
								approx 5 gpm while pumping
								110psi kickoff slowly decreases to 2gpm at 75psi
								well recharges quickly when pump shut off
								screened interval in Unkpapa formation

Knight Piésold
CONSULTING

Appendix B-2
Time and Water Level Data Values Used in Pumping Test Analysis: Dewey Test, Drawdown Data

This page intentionally left blank

Table B.2-1:
Time and Water Level Data Values Used in Pumping Test Analysis: Dewey Test, Drawdown Data

32-3C		3643.9	**GW-49**		3652	**29-7**		3659.3	**32-4C**		3644.0	**32-5**		3641.0	**32-9C**		3626.3
Time (days)	Drawdown (ft)	Elevation (ft)	Time (days)	Drawdown (ft)	Elevation (ft)	Time (days)	Drawdown (ft)	Elevation (ft)	Time (days)	Drawdown (ft)	Elevation (ft)	Time (days)	Drawdown (ft)	Elevation (ft)	Time (days)	Drawdown (ft)	Elevation (ft)
0.000012	16.362759	3,627.5	0.000012	-0.008329	3,652.0	0.000012	0.045472	3,659.3	0.000012	-0.002208	3,644.0	0.000000	-0.048216	3,641.0	0.000012	-0.025243	3,626.3
0.000023	19.161989	3,624.7	0.000023	-0.001406	3,652.0	0.000023	-0.000681	3,659.3	0.000023	0.004715	3,644.0	0.000012	-0.022831	3,641.0	0.000023	0.027834	3,626.3
0.000035	19.948912	3,624.0	0.000035	0.007825	3,652.0	0.000035	0.029319	3,659.3	0.000035	0.007023	3,644.0	0.000023	0.000246	3,641.0	0.000035	0.034757	3,626.3
0.000046	20.355066	3,623.5	0.000046	-0.001406	3,652.0	0.000046	-0.023758	3,659.3	0.000046	0.009331	3,644.0	0.000035	0.002553	3,641.0	0.000046	-0.009089	3,626.3
0.000058	21.017374	3,622.9	0.000058	0.035517	3,652.0	0.000058	0.013165	3,659.3	0.000058	0.007023	3,644.0	0.000046	0.000246	3,641.0	0.000058	0.011680	3,626.3
0.000069	21.402758	3,622.5	0.000069	-0.012944	3,652.0	0.000069	-0.012220	3,659.3	0.000069	0.002408	3,644.0	0.000058	0.004861	3,641.0	0.000069	0.009372	3,626.3
0.000081	21.651989	3,622.2	0.000081	-0.008329	3,652.0	0.000081	0.052395	3,659.2	0.000081	0.013946	3,644.0	0.000069	-0.011293	3,641.0	0.000081	0.023219	3,626.3
0.000093	22.035067	3,621.9	0.000093	-0.036021	3,652.0	0.000093	0.057011	3,659.2	0.000093	0.002408	3,644.0	0.000081	-0.020523	3,641.0	0.000093	0.013988	3,626.3
0.000104	22.071989	3,621.8	0.000104	0.007825	3,652.0	0.000104	0.001626	3,659.3	0.000104	0.016254	3,644.0	0.000093	0.004861	3,641.0	0.000104	-0.002166	3,626.3
0.000116	22.016603	3,621.9	0.000116	0.014748	3,652.0	0.000116	-0.028374	3,659.3	0.000116	0.000100	3,644.0	0.000104	-0.015908	3,641.0	0.000116	0.037065	3,626.3
0.000127	22.381220	3,621.5	0.000127	-0.006021	3,652.0	0.000127	-0.000681	3,659.3	0.000127	0.000100	3,644.0	0.000116	0.000246	3,641.0	0.000127	0.013988	3,626.3
0.000139	22.337374	3,621.6	0.000139	-0.001406	3,652.0	0.000139	-0.005297	3,659.3	0.000139	0.009331	3,644.0	0.000127	-0.002062	3,641.0	0.000139	-0.006781	3,626.3
0.000150	22.618912	3,621.3	0.000150	-0.008329	3,652.0	0.000150	0.045472	3,659.3	0.000150	0.009331	3,644.0	0.000139	0.002553	3,641.0	0.000150	-0.004474	3,626.3
0.000162	22.508142	3,621.4	0.000162	0.005517	3,652.0	0.000162	0.006242	3,659.3	0.000162	0.007023	3,644.0	0.000150	0.021015	3,641.0	0.000162	-0.018320	3,626.3
0.000174	22.847374	3,621.1	0.000174	-0.019867	3,652.0	0.000174	-0.021451	3,659.3	0.000174	0.011639	3,644.0	0.000162	-0.008985	3,641.0	0.000174	0.018603	3,626.3
0.000185	22.914297	3,621.0	0.000185	-0.008329	3,652.0	0.000185	-0.026066	3,659.3	0.000185	-0.004515	3,644.0	0.000174	0.014092	3,641.0	0.000185	0.000142	3,626.3
0.000197	22.999681	3,620.9	0.000197	-0.017559	3,652.0	0.000197	0.024703	3,659.3	0.000197	0.000100	3,644.0	0.000185	-0.018216	3,641.0	0.000197	0.013988	3,626.3
0.000208	22.893528	3,621.0	0.000208	-0.029098	3,652.0	0.000208	0.003934	3,659.3	0.000208	0.013946	3,644.0	0.000197	0.016400	3,641.0	0.000208	0.000142	3,626.3
0.000220	23.131220	3,620.8	0.000220	-0.003713	3,652.0	0.000220	0.020088	3,659.3	0.000220	0.013946	3,644.0	0.000208	-0.013600	3,641.0	0.000220	0.002449	3,626.3
0.000231	23.131220	3,620.8	0.000231	0.010133	3,652.0	0.000231	0.006242	3,659.3	0.000231	0.013946	3,644.0	0.000220	0.018707	3,641.0	0.000231	-0.013704	3,626.3
0.000243	23.271988	3,620.6	0.000243	-0.012944	3,652.0	0.000243	-0.014528	3,659.3	0.000243	0.011639	3,644.0	0.000231	0.023323	3,641.0	0.000243	0.011680	3,626.3
0.000255	23.121988	3,620.8	0.000255	0.017056	3,652.0	0.000255	0.031626	3,659.3	0.000255	0.004715	3,644.0	0.000243	-0.004370	3,641.0	0.000255	-0.011397	3,626.3
0.000266	23.101219	3,620.8	0.000266	0.005517	3,652.0	0.000266	0.038549	3,659.3	0.000266	0.023177	3,644.0	0.000255	-0.002062	3,641.0	0.000266	0.011680	3,626.3
0.000278	23.934296	3,620.0	0.000278	-0.022175	3,652.0	0.000278	0.006242	3,659.3	0.000278	0.009331	3,644.0	0.000266	-0.011293	3,641.0	0.000278	-0.002166	3,626.3
0.000289	24.737373	3,619.2	0.000289	-0.026790	3,652.0	0.000289	-0.032989	3,659.3	0.000289	0.007023	3,644.0	0.000278	0.009477	3,641.0	0.000289	0.009372	3,626.3
0.000301	25.408913	3,618.5	0.000301	0.007825	3,652.0	0.000301	-0.009912	3,659.3	0.000301	0.009331	3,644.0	0.000289	0.057938	3,640.9	0.000301	-0.009089	3,626.3
0.000312	26.036604	3,617.9	0.000312	-0.001406	3,652.0	0.000312	0.020088	3,659.3	0.000312	0.002408	3,644.0	0.000301	-0.008985	3,641.0	0.000312	0.002449	3,626.3
0.000324	27.222757	3,616.7	0.000324	-0.022175	3,652.0	0.000324	0.020088	3,659.3	0.000324	0.013946	3,644.0	0.000312	-0.018216	3,641.0	0.000324	-0.013704	3,626.3
0.000336	27.725836	3,616.2	0.000336	-0.008329	3,652.0	0.000336	-0.021451	3,659.3	0.000336	-0.004515	3,644.0	0.000324	0.009477	3,641.0	0.000336	-0.016012	3,626.3
0.000347	28.452759	3,615.4	0.000347	-0.029098	3,652.0	0.000347	0.010857	3,659.3	0.000347	0.007023	3,644.0	0.000336	-0.002062	3,641.0	0.000347	-0.043704	3,626.3
0.000359	29.391989	3,614.5	0.000359	0.017056	3,652.0	0.000359	0.006242	3,659.3	0.000359	0.002408	3,644.0	0.000347	-0.011293	3,641.0	0.000359	0.037065	3,626.3
0.000370	30.266603	3,613.6	0.000370	-0.017559	3,652.0	0.000370	-0.005297	3,659.3	0.000370	-0.002208	3,644.0	0.000359	0.000246	3,641.0	0.000370	-0.004474	3,626.3
0.000382	30.670450	3,613.2	0.000382	-0.012944	3,652.0	0.000382	0.013165	3,659.3	0.000382	0.013946	3,644.0	0.000370	0.000246	3,641.0	0.000382	0.018603	3,626.3
0.000394	30.815834	3,613.1	0.000394	-0.038329	3,652.0	0.000394	-0.000681	3,659.3	0.000394	0.004715	3,644.0	0.000382	0.025630	3,641.0	0.000394	0.002449	3,626.3
0.000417	30.891989	3,613.0	0.000405	-0.010636	3,652.0	0.000417	0.015472	3,659.3	0.000417	0.009331	3,644.0	0.000394	0.000246	3,641.0	0.000417	-0.004474	3,626.3
0.000451	29.811989	3,614.1	0.000417	-0.006021	3,652.0	0.000451	-0.035297	3,659.3	0.000451	0.013946	3,644.0	0.000417	-0.006677	3,641.0	0.000451	0.030142	3,626.3
0.000463	28.955835	3,614.9	0.000451	0.000902	3,652.0	0.000463	0.057011	3,659.2	0.000463	0.000100	3,644.0	0.000451	0.048707	3,641.0	0.000463	-0.022935	3,626.3
0.000486	27.504297	3,616.4	0.000463	-0.017559	3,652.0	0.000486	-0.014528	3,659.3	0.000486	0.002408	3,644.0	0.000463	0.016400	3,641.0	0.000486	-0.013704	3,626.3
0.000498	26.318142	3,617.6	0.000486	0.000902	3,652.0	0.000498	-0.000681	3,659.3	0.000498	-0.002208	3,644.0	0.000486	0.000246	3,641.0	0.000498	-0.011397	3,626.3
0.000521	25.127373	3,618.8	0.000498	0.014748	3,652.0	0.000521	0.017780	3,659.3	0.000521	0.007023	3,644.0	0.000498	-0.027447	3,641.0	0.000521	-0.025243	3,626.3
0.000532	24.181219	3,619.7	0.000521	0.012441	3,652.0	0.000532	-0.007605	3,659.3	0.000532	0.011639	3,644.0	0.000521	0.016400	3,641.0	0.000532	-0.004474	3,626.3
0.000556	23.816605	3,620.1	0.000532	-0.019867	3,652.0	0.000556	0.033934	3,659.3	0.000556	0.013946	3,644.0	0.000532	-0.004370	3,641.0	0.000556	-0.029858	3,626.3
0.000590	24.716604	3,619.2	0.000556	0.010133	3,652.0	0.000590	-0.014528	3,659.3	0.000590	-0.002208	3,644.0	0.000556	0.002553	3,641.0	0.000590	-0.048320	3,626.3
0.000625	26.325066	3,617.6	0.000590	0.042441	3,652.0	0.000625	0.003934	3,659.3	0.000625	0.011639	3,644.0	0.000590	0.016400	3,641.0	0.000625	-0.020628	3,626.3
0.000660	28.007374	3,615.9	0.000625	0.007825	3,652.0	0.000660	0.010857	3,659.3	0.000660	0.007023	3,644.0	0.000625	0.000246	3,641.0	0.000660	0.013988	3,626.3
0.000694	29.479681	3,614.4	0.000660	-0.022175	3,652.0	0.000694	-0.019143	3,659.3	0.000694	0.011639	3,644.0	0.000660	-0.002062	3,641.0	0.000694	0.011680	3,626.3
0.000729	29.885836	3,614.0	0.000694	-0.017559	3,652.0	0.000729	0.010857	3,659.3	0.000729	0.016254	3,644.0	0.000694	-0.029754	3,641.0	0.000729	0.023219	3,626.3
0.000764	30.118912	3,613.8	0.000729	0.005517	3,652.0	0.000764	0.045472	3,659.3	0.000764	0.000100	3,644.0	0.000729	-0.018216	3,641.0	0.000764	0.000142	3,626.3
0.000799	29.791220	3,614.1	0.000764	-0.012944	3,652.0	0.000799	0.020088	3,659.3	0.000799	-0.004515	3,644.0	0.000764	0.034861	3,641.0	0.000799	0.020911	3,626.3
0.000833	29.622759	3,614.3	0.000799	0.010133	3,652.0	0.000833	-0.012220	3,659.3	0.000833	0.000100	3,644.0	0.000799	0.039477	3,641.0	0.000833	0.025526	3,626.3
0.000903	29.613527	3,614.3	0.000833	-0.008329	3,652.0	0.000903	-0.026066	3,659.3	0.000903	0.007023	3,644.0	0.000833	0.021015	3,641.0	0.000903	-0.018320	3,626.3
0.000972	29.675835	3,614.2	0.000903	-0.022175	3,652.0	0.000972	-0.005297	3,659.3	0.000972	0.030100	3,644.0	0.000903	-0.008985	3,641.0	0.000972	0.020911	3,626.3

Table B.2-1:
Time and Water Level Data Values Used in Pumping Test Analysis: Dewey Test, Drawdown Data

32-3C		3643.9	**GW-49**		3652	**29-7**		3659.3	**32-4C**		3644.0	**32-5**		3641.0	**32-9C**		3626.3
Time (days)	Drawdown (ft)	Elevation (ft)	Time (days)	Drawdown (ft)	Elevation (ft)	Time (days)	Drawdown (ft)	Elevation (ft)	Time (days)	Drawdown (ft)	Elevation (ft)	Time (days)	Drawdown (ft)	Elevation (ft)	Time (days)	Drawdown (ft)	Elevation (ft)
0.001042	29.874296	3,614.0	0.000972	0.021671	3,652.0	0.001042	-0.028374	3,659.3	0.001042	0.004715	3,644.0	0.000972	0.025630	3,641.0	0.001042	-0.016012	3,626.3
0.001111	29.814297	3,614.1	0.001042	0.023979	3,652.0	0.001111	-0.014528	3,659.3	0.001111	0.011639	3,644.0	0.001042	0.067169	3,640.9	0.001111	0.018603	3,626.3
0.001181	29.823526	3,614.1	0.001111	0.012441	3,652.0	0.001181	-0.005297	3,659.3	0.001181	0.013946	3,644.0	0.001111	0.069477	3,640.9	0.001181	0.018603	3,626.3
0.001250	29.851219	3,614.0	0.001181	0.010133	3,652.0	0.001250	-0.030681	3,659.3	0.001250	0.011639	3,644.0	0.001181	0.090246	3,640.9	0.001250	-0.013704	3,626.3
0.001319	29.989681	3,613.9	0.001250	-0.015252	3,652.0	0.001319	0.027011	3,659.3	0.001319	0.016254	3,644.0	0.001250	0.076400	3,640.9	0.001319	0.064757	3,626.2
0.001389	30.010450	3,613.9	0.001319	-0.040636	3,652.0	0.001389	-0.056066	3,659.4	0.001389	0.002408	3,644.0	0.001319	0.131784	3,640.9	0.001389	-0.041397	3,626.3
0.001493	30.190451	3,613.7	0.001389	0.007825	3,652.0	0.001493	0.001626	3,659.3	0.001493	0.016254	3,644.0	0.001389	0.152553	3,640.8	0.001493	-0.025243	3,626.3
0.001597	30.144297	3,613.8	0.001493	0.014748	3,652.0	0.001597	-0.032989	3,659.3	0.001597	0.023177	3,644.0	0.001493	0.180246	3,640.8	0.001597	-0.025243	3,626.3
0.001701	30.280451	3,613.6	0.001597	-0.019867	3,652.0	0.001701	-0.012220	3,659.3	0.001701	0.016254	3,644.0	0.001597	0.203323	3,640.8	0.001701	-0.032166	3,626.3
0.001806	30.506603	3,613.4	0.001701	-0.022175	3,652.0	0.001806	-0.000681	3,659.3	0.001806	0.030100	3,644.0	0.001701	0.274861	3,640.7	0.001806	0.013988	3,626.3
0.001944	30.497374	3,613.4	0.001806	-0.026790	3,652.0	0.001944	-0.035297	3,659.3	0.001944	0.041639	3,644.0	0.001806	0.291015	3,640.7	0.001944	-0.004474	3,626.3
0.002083	30.527374	3,613.4	0.001944	0.060902	3,651.9	0.002083	-0.014528	3,659.3	0.002083	0.030100	3,644.0	0.001944	0.330246	3,640.7	0.002083	-0.041397	3,626.3
0.002222	30.758142	3,613.1	0.002083	0.007825	3,652.0	0.002222	0.031626	3,659.3	0.002222	0.037023	3,644.0	0.002083	0.411015	3,640.6	0.002222	-0.029858	3,626.3
0.002361	30.873528	3,613.0	0.002222	-0.029098	3,652.0	0.002361	-0.009912	3,659.3	0.002361	0.039331	3,644.0	0.002222	0.452553	3,640.5	0.002361	-0.016012	3,626.3
0.002500	31.071989	3,612.8	0.002361	0.007825	3,652.0	0.002500	0.015472	3,659.3	0.002500	0.055485	3,643.9	0.002361	0.494092	3,640.5	0.002500	-0.009089	3,626.3
0.002639	30.954296	3,612.9	0.002500	-0.008329	3,652.0	0.002639	-0.012220	3,659.3	0.002639	0.050869	3,643.9	0.002500	0.512553	3,640.5	0.002639	-0.022935	3,626.3
0.002778	31.159681	3,612.7	0.002639	0.014748	3,652.0	0.002778	-0.012220	3,659.3	0.002778	0.048562	3,644.0	0.002639	0.581784	3,640.4	0.002778	-0.009089	3,626.3
0.002951	31.143528	3,612.8	0.002778	0.000902	3,652.0	0.002951	0.024703	3,659.3	0.002951	0.067023	3,643.9	0.002778	0.595630	3,640.4	0.002951	-0.013704	3,626.3
0.003125	31.323526	3,612.6	0.002951	-0.022175	3,652.0	0.003125	-0.026066	3,659.3	0.003125	0.071639	3,643.9	0.002951	0.713323	3,640.3	0.003125	-0.025243	3,626.3
0.003299	31.420450	3,612.5	0.003125	-0.006021	3,652.0	0.003299	0.006242	3,659.3	0.003299	0.080869	3,643.9	0.003125	0.701784	3,640.3	0.003299	-0.052935	3,626.4
0.003472	31.475836	3,612.4	0.003299	0.003210	3,652.0	0.003472	-0.005297	3,659.3	0.003472	0.080869	3,643.9	0.003299	0.761784	3,640.2	0.003472	-0.004474	3,626.3
0.003704	31.637373	3,612.3	0.003472	-0.006021	3,652.0	0.003704	0.015472	3,659.3	0.003704	0.099331	3,643.9	0.003472	0.791784	3,640.2	0.003704	0.009372	3,626.3
0.003935	31.695066	3,612.2	0.003704	0.010133	3,652.0	0.003935	-0.005297	3,659.3	0.003935	0.103946	3,643.9	0.003704	0.872553	3,640.1	0.003935	-0.046012	3,626.3
0.004167	31.757374	3,612.1	0.003935	0.007825	3,652.0	0.004167	0.050088	3,659.2	0.004167	0.143177	3,643.9	0.003935	0.916400	3,640.1	0.004167	-0.013704	3,626.3
0.004398	31.796604	3,612.1	0.004167	-0.019867	3,652.0	0.004398	-0.000681	3,659.3	0.004398	0.133946	3,643.9	0.004167	0.983323	3,640.0	0.004398	-0.004474	3,626.3
0.004630	32.068913	3,611.8	0.004398	0.005517	3,652.0	0.004630	0.010857	3,659.3	0.004630	0.143177	3,643.9	0.004398	1.011015	3,640.0	0.004630	-0.092166	3,626.4
0.004861	32.036606	3,611.9	0.004630	0.000902	3,652.0	0.004861	0.010857	3,659.3	0.004861	0.166254	3,643.8	0.004630	1.119477	3,639.9	0.004861	-0.006781	3,626.3
0.005208	32.232758	3,611.7	0.004861	0.000902	3,652.0	0.005208	0.017780	3,659.3	0.005208	0.187023	3,643.8	0.004861	1.158707	3,639.8	0.005208	-0.032166	3,626.3
0.005556	32.179680	3,611.7	0.005208	-0.008329	3,652.0	0.005556	0.043165	3,659.3	0.005556	0.196254	3,643.8	0.005208	1.204861	3,639.8	0.005556	0.030142	3,626.3
0.005903	32.373528	3,611.5	0.005556	-0.006021	3,652.0	0.005903	-0.012220	3,659.3	0.005903	0.221639	3,643.8	0.005556	1.304092	3,639.7	0.005903	0.041680	3,626.3
0.006250	32.382759	3,611.5	0.005903	-0.015252	3,652.0	0.006250	-0.014528	3,659.3	0.006250	0.244715	3,643.8	0.005903	1.357169	3,639.6	0.006250	0.000142	3,626.3
0.006597	32.398911	3,611.5	0.006250	-0.015252	3,652.0	0.006597	-0.021451	3,659.3	0.006597	0.260869	3,643.7	0.006250	1.421784	3,639.6	0.006597	0.023219	3,626.3
0.006944	32.641220	3,611.3	0.006597	0.007825	3,652.0	0.006944	0.008549	3,659.3	0.006944	0.283946	3,643.7	0.006597	1.530246	3,639.5	0.006944	0.048603	3,626.3
0.007292	32.781990	3,611.1	0.006944	-0.029098	3,652.0	0.007292	-0.009912	3,659.3	0.007292	0.309331	3,643.7	0.006944	1.534861	3,639.5	0.007292	0.041680	3,626.3
0.007639	32.922756	3,611.0	0.007292	-0.033713	3,652.0	0.007639	-0.002989	3,659.3	0.007639	0.309331	3,643.7	0.007292	1.567169	3,639.4	0.007639	0.080911	3,626.2
0.007986	32.874298	3,611.0	0.007639	-0.015252	3,652.0	0.007986	-0.000681	3,659.3	0.007986	0.339331	3,643.7	0.007639	1.645630	3,639.4	0.007986	0.083219	3,626.2
0.008333	32.980450	3,610.9	0.007986	0.019364	3,652.0	0.008333	-0.026066	3,659.3	0.008333	0.371639	3,643.6	0.007986	1.714861	3,639.3	0.008333	0.055526	3,626.2
0.009028	33.077374	3,610.8	0.008333	0.019364	3,652.0	0.009028	0.022395	3,659.3	0.009028	0.401639	3,643.6	0.008333	1.728707	3,639.3	0.009028	0.090142	3,626.2
0.009722	33.061218	3,610.8	0.009028	0.030902	3,652.0	0.009722	0.010857	3,659.3	0.009722	0.436254	3,643.6	0.009028	1.876400	3,639.1	0.009722	0.073988	3,626.2
0.010417	33.261990	3,610.6	0.009722	-0.006021	3,652.0	0.010417	0.010857	3,659.3	0.010417	0.480100	3,643.5	0.009722	1.954861	3,639.0	0.010417	0.099372	3,626.2
0.011111	33.460449	3,610.4	0.010417	-0.012944	3,652.0	0.011111	-0.007605	3,659.3	0.011111	0.521639	3,643.5	0.010417	2.024092	3,639.0	0.011111	0.133988	3,626.2
0.011806	33.536606	3,610.4	0.011111	-0.022175	3,652.0	0.011806	0.047780	3,659.3	0.011806	0.558562	3,643.4	0.011111	2.079477	3,638.9	0.011806	0.145526	3,626.2
0.012500	33.552757	3,610.3	0.011806	-0.036021	3,652.0	0.012500	0.010857	3,659.3	0.012500	0.581639	3,643.4	0.011806	2.178707	3,638.8	0.012500	0.131680	3,626.2
0.013194	33.728142	3,610.2	0.012500	-0.017559	3,652.0	0.013194	0.006242	3,659.3	0.013194	0.611639	3,643.4	0.012500	2.277938	3,638.7	0.013194	0.166296	3,626.1
0.013889	33.753529	3,610.1	0.013194	0.000902	3,652.0	0.013889	0.045472	3,659.3	0.013889	0.657792	3,643.3	0.013194	2.317169	3,638.7	0.013889	0.187065	3,626.1
0.014931	34.346603	3,609.6	0.013889	-0.015252	3,652.0	0.014931	-0.000681	3,659.3	0.014931	0.699331	3,643.3	0.013889	2.361015	3,638.6	0.014931	0.196296	3,626.1
0.015972	34.362759	3,609.5	0.014931	0.007825	3,652.0	0.015972	0.015472	3,659.3	0.015972	0.747792	3,643.3	0.014931	2.499476	3,638.5	0.015972	0.267834	3,626.0
0.017014	34.570450	3,609.3	0.015972	-0.012944	3,652.0	0.017014	0.001626	3,659.3	0.017014	0.796254	3,643.2	0.015972	2.568707	3,638.4	0.017014	0.288603	3,626.0
0.018056	34.745834	3,609.2	0.017014	-0.008329	3,652.0	0.018056	0.024703	3,659.3	0.018056	0.844715	3,643.2	0.017014	2.637938	3,638.4	0.018056	0.353219	3,625.9
0.019444	34.872757	3,609.0	0.018056	0.040133	3,652.0	0.019444	0.013165	3,659.3	0.019444	0.911639	3,643.1	0.018056	2.734861	3,638.3	0.019444	0.392449	3,625.9
0.020833	34.872757	3,609.0	0.019444	0.051671	3,651.9	0.020833	0.008549	3,659.3	0.020833	0.967023	3,643.0	0.019444	2.868707	3,638.1	0.020833	0.417834	3,625.9
0.022222	35.149681	3,608.8	0.020833	0.026287	3,652.0	0.022222	-0.012220	3,659.3	0.022222	1.022408	3,643.0	0.020833	2.961015	3,638.0	0.022222	0.487065	3,625.8

Table B.2-1:
Time and Water Level Data Values Used in Pumping Test Analysis: Dewey Test, Drawdown Data

32-3C		3643.9	**GW-49**		3652	**29-7**		3659.3	**32-4C**		3644.0	**32-5**		3641.0	**32-9C**		3626.3
Time (days)	Drawdown (ft)	Elevation (ft)	Time (days)	Drawdown (ft)	Elevation (ft)	Time (days)	Drawdown (ft)	Elevation (ft)	Time (days)	Drawdown (ft)	Elevation (ft)	Time (days)	Drawdown (ft)	Elevation (ft)	Time (days)	Drawdown (ft)	Elevation (ft)
0.023611	35.149681	3,608.8	0.022222	0.030902	3,652.0	0.023611	-0.012220	3,659.3	0.023611	1.066254	3,642.9	0.022222	3.037169	3,638.0	0.023611	0.549372	3,625.8
0.025000	35.355064	3,608.5	0.023611	0.049364	3,652.0	0.025000	0.020088	3,659.3	0.025000	1.123946	3,642.9	0.023611	3.113323	3,637.9	0.025000	0.600142	3,625.7
0.026389	35.320450	3,608.6	0.025000	0.053979	3,651.9	0.026389	0.010857	3,659.3	0.026389	1.156254	3,642.8	0.025000	3.194092	3,637.8	0.026389	0.553988	3,625.7
0.027778	35.645836	3,608.3	0.026389	0.053979	3,651.9	0.027778	0.027011	3,659.3	0.027778	1.204715	3,642.8	0.026389	3.256400	3,637.7	0.027778	0.556296	3,625.7
0.029514	35.567375	3,608.3	0.027778	0.077056	3,651.9	0.029514	-0.026066	3,659.3	0.029514	1.285485	3,642.7	0.027778	3.300246	3,637.7	0.029514	0.616296	3,625.7
0.031250	35.588142	3,608.3	0.029514	0.083979	3,651.9	0.031250	0.036242	3,659.3	0.031250	1.315485	3,642.7	0.029514	3.408707	3,637.6	0.031250	0.623219	3,625.7
0.032986	35.680450	3,608.2	0.031250	0.134748	3,651.9	0.032986	0.036242	3,659.3	0.032986	1.363946	3,642.6	0.031250	3.482553	3,637.5	0.032986	0.690142	3,625.6
0.034722	35.735836	3,608.2	0.032986	0.100133	3,651.9	0.034722	-0.014528	3,659.3	0.034722	1.423946	3,642.6	0.032986	3.544861	3,637.5	0.034722	0.745526	3,625.6
0.037037	35.950451	3,607.9	0.034722	0.141671	3,651.9	0.037037	-0.016835	3,659.3	0.037037	1.481639	3,642.5	0.034722	3.607169	3,637.4	0.037037	0.784757	3,625.5
0.039352	35.978142	3,607.9	0.037037	0.125517	3,651.9	0.039352	0.024703	3,659.3	0.039352	1.532408	3,642.5	0.037037	3.713323	3,637.3	0.039352	0.863219	3,625.4
0.041667	35.952759	3,607.9	0.039352	0.164748	3,651.8	0.041667	0.001626	3,659.3	0.041667	1.587792	3,642.4	0.039352	3.807938	3,637.2	0.041667	0.865526	3,625.4
0.043981	36.153526	3,607.7	0.041667	0.201671	3,651.8	0.043981	0.006242	3,659.3	0.043981	1.645485	3,642.4	0.041667	3.863323	3,637.1	0.043981	0.890911	3,625.4
0.046296	36.012756	3,607.9	0.043981	0.208594	3,651.8	0.046296	0.001626	3,659.3	0.046296	1.696254	3,642.3	0.043981	3.953323	3,637.0	0.046296	0.960142	3,625.3
0.048611	36.144295	3,607.8	0.046296	0.247825	3,651.8	0.048611	0.010857	3,659.3	0.048611	1.735485	3,642.3	0.046296	4.015630	3,637.0	0.048611	0.999372	3,625.3
0.052083	36.488144	3,607.4	0.048611	0.289364	3,651.7	0.052083	-0.021451	3,659.3	0.052083	1.827792	3,642.2	0.048611	4.061784	3,636.9	0.052083	1.091680	3,625.2
0.055556	36.432758	3,607.5	0.052083	0.303210	3,651.7	0.055556	-0.016835	3,659.3	0.055556	1.887792	3,642.1	0.052083	4.200246	3,636.8	0.055556	1.147065	3,625.2
0.059028	36.527374	3,607.4	0.055556	0.402441	3,651.6	0.059028	0.033934	3,659.3	0.059028	1.940869	3,642.1	0.055556	4.253323	3,636.7	0.059028	1.243988	3,625.1
0.062500	36.478912	3,607.4	0.059028	0.471671	3,651.5	0.062500	-0.000681	3,659.3	0.062500	2.003177	3,642.0	0.059028	4.368707	3,636.6	0.062500	1.315526	3,625.0
0.065972	36.508911	3,607.4	0.062500	0.476287	3,651.5	0.065972	-0.000681	3,659.3	0.065972	2.056254	3,641.9	0.062500	4.426400	3,636.6	0.065972	1.313219	3,625.0
0.069444	36.580452	3,607.3	0.065972	0.584748	3,651.4	0.069444	0.015472	3,659.3	0.069444	2.107023	3,641.9	0.065972	4.481784	3,636.5	0.069444	1.324757	3,625.0
0.072917	36.688911	3,607.2	0.069444	0.573210	3,651.4	0.073021	0.059319	3,659.2	0.072917	2.157792	3,641.8	0.069444	4.548707	3,636.5	0.072917	1.382449	3,624.9
0.076389	36.806602	3,607.1	0.072917	0.653979	3,651.3	0.076493	0.057011	3,659.2	0.076389	2.231638	3,641.8	0.072917	4.647938	3,636.4	0.076389	1.474757	3,624.8
0.079861	36.647373	3,607.3	0.076389	0.716287	3,651.3	0.079965	0.033934	3,659.3	0.079861	2.273177	3,641.7	0.076389	4.650246	3,636.3	0.079965	1.564757	3,624.7
0.083368	36.778912	3,607.1	0.079861	0.711671	3,651.3	0.083438	0.070857	3,659.2	0.083449	2.317023	3,641.7	0.079931	4.777169	3,636.2	0.083438	1.513988	3,624.8
0.090312	37.895836	3,606.0	0.083449	0.771671	3,651.2	0.090382	0.084703	3,659.2	0.090394	2.409331	3,641.6	0.083403	4.807169	3,636.2	0.090382	1.668603	3,624.6
0.097257	37.900452	3,606.0	0.090394	0.799364	3,651.2	0.097326	0.084703	3,659.2	0.097338	2.510869	3,641.5	0.090347	4.936399	3,636.1	0.097326	1.693988	3,624.6
0.104201	38.121990	3,605.8	0.097338	0.972441	3,651.0	0.104271	-0.060681	3,659.4	0.104282	2.598562	3,641.4	0.097292	5.116400	3,635.9	0.104271	1.843988	3,624.5
0.111147	38.013527	3,605.9	0.104282	1.080902	3,650.9	0.111215	0.050088	3,659.2	0.111227	2.667792	3,641.3	0.104236	5.215631	3,635.8	0.111215	1.998603	3,624.3
0.118091	38.108143	3,605.8	0.111227	1.159364	3,650.8	0.118160	0.057011	3,659.2	0.118171	2.743946	3,641.3	0.111181	5.340246	3,635.7	0.118160	1.931680	3,624.4
0.125035	38.172756	3,605.7	0.118171	1.307056	3,650.7	0.125104	0.047780	3,659.3	0.125116	2.815485	3,641.2	0.118125	5.411784	3,635.6	0.125104	2.077065	3,624.2
0.131979	38.331989	3,605.6	0.125116	1.327825	3,650.7	0.132049	0.068549	3,659.2	0.132060	2.880100	3,641.1	0.125069	5.524861	3,635.5	0.132049	2.139373	3,624.2
0.138924	38.493526	3,605.4	0.132060	1.413210	3,650.6	0.138993	0.077780	3,659.2	0.139005	2.949331	3,641.1	0.132014	5.566400	3,635.4	0.138993	2.210911	3,624.1
0.149340	38.484295	3,605.4	0.139005	1.533210	3,650.5	0.149410	0.075472	3,659.2	0.149421	3.032408	3,641.0	0.138958	5.633323	3,635.4	0.149410	2.416296	3,623.9
0.159757	38.350449	3,605.5	0.149421	1.637056	3,650.4	0.159826	0.022395	3,659.3	0.159838	3.110869	3,640.9	0.149375	5.794861	3,635.2	0.159826	2.510911	3,623.8
0.170174	38.484295	3,605.4	0.159838	1.747825	3,650.3	0.170243	0.082395	3,659.2	0.170255	3.198562	3,640.8	0.159792	5.875630	3,635.1	0.170243	2.476295	3,623.8
0.180590	38.627373	3,605.3	0.170255	1.881671	3,650.1	0.180660	0.031626	3,659.3	0.180671	3.265485	3,640.7	0.170208	5.907938	3,635.1	0.180660	2.713988	3,623.6
0.194479	38.631989	3,605.3	0.180671	1.976287	3,650.0	0.194549	0.061626	3,659.2	0.194560	3.364715	3,640.6	0.180625	6.007169	3,635.0	0.194549	2.843219	3,623.5
0.208368	38.811989	3,605.1	0.194560	2.096287	3,649.9	0.208437	0.070857	3,659.2	0.208449	3.452408	3,640.5	0.194514	6.221784	3,634.8	0.208437	2.877834	3,623.4
0.222257	38.763527	3,605.1	0.208449	2.267056	3,649.7	0.222326	0.103165	3,659.2	0.222338	3.540100	3,640.5	0.208403	6.184861	3,634.8	0.222326	2.986295	3,623.3
0.236146	38.920452	3,605.0	0.222338	2.336287	3,649.7	0.236215	0.054703	3,659.2	0.236227	3.572408	3,640.4	0.222292	6.406400	3,634.6	0.236215	3.247065	3,623.1
0.250035	38.839680	3,605.1	0.236227	2.465518	3,649.5	0.250104	0.057011	3,659.2	0.250116	3.697023	3,640.3	0.236181	6.473323	3,634.5	0.250104	3.251680	3,623.0
0.263924	38.908913	3,605.0	0.250116	2.583210	3,649.4	0.263993	0.027011	3,659.3	0.264005	3.784715	3,640.2	0.250069	6.581784	3,634.4	0.263993	3.427065	3,622.9
0.277812	39.130451	3,604.8	0.264005	2.652441	3,649.3	0.277882	0.066242	3,659.2	0.277894	3.853946	3,640.1	0.263958	6.655631	3,634.3	0.277882	3.463988	3,622.8
0.295174	39.375065	3,604.5	0.277894	2.781671	3,649.2	0.295243	0.073165	3,659.2	0.295255	3.950869	3,640.0	0.277847	6.711015	3,634.3	0.295243	3.683219	3,622.6
0.312535	39.285065	3,604.6	0.295255	2.931671	3,649.1	0.312604	0.036242	3,659.3	0.312616	4.045485	3,640.0	0.295208	6.893322	3,634.1	0.312604	3.747834	3,622.6
0.329896	39.349682	3,604.6	0.312616	3.000902	3,649.0	0.329965	0.073165	3,659.2	0.329977	4.133177	3,639.9	0.312569	6.967169	3,634.0	0.329965	3.883988	3,622.4
0.347257	39.538914	3,604.4	0.329977	3.118594	3,648.9	0.347326	0.093934	3,659.2	0.347338	4.211638	3,639.8	0.329931	7.096400	3,633.9	0.347326	4.006296	3,622.3
0.370405	39.342758	3,604.6	0.347338	3.263979	3,648.7	0.370475	0.063934	3,659.2	0.370486	4.331638	3,639.7	0.347292	7.179477	3,633.8	0.370475	4.140141	3,622.2
0.393553	39.598911	3,604.3	0.370486	3.407056	3,648.6	0.393623	0.084703	3,659.2	0.393634	4.442408	3,639.6	0.370440	7.308707	3,633.7	0.393623	4.333988	3,622.0
0.416701	39.898911	3,604.0	0.393634	3.510902	3,648.5	0.416771	0.077780	3,659.2	0.416782	4.548562	3,639.5	0.393588	7.401015	3,633.6	0.416771	4.453988	3,621.8
0.439965	39.430450	3,604.5	0.416782	3.647056	3,648.4	0.440035	0.066242	3,659.2	0.440046	4.650100	3,639.3	0.416736	7.537169	3,633.5	0.440035	4.562449	3,621.7
0.462998	39.878143	3,604.0	0.440046	3.753210	3,648.2	0.463067	0.061626	3,659.2	0.463079	4.765485	3,639.2	0.440000	7.645630	3,633.4	0.463067	4.772449	3,621.5

Table B.2-1:
Time and Water Level Data Values Used in Pumping Test Analysis: Dewey Test, Drawdown Data

32-3C		3643.9	**GW-49**		3652	**29-7**		3659.3	**32-4C**		3644.0	**32-5**		3641.0	**32-9C**		3626.3
Time (days)	Drawdown (ft)	Elevation (ft)	Time (days)	Drawdown (ft)	Elevation (ft)	Time (days)	Drawdown (ft)	Elevation (ft)	Time (days)	Drawdown (ft)	Elevation (ft)	Time (days)	Drawdown (ft)	Elevation (ft)	Time (days)	Drawdown (ft)	Elevation (ft)
0.486146	39.965836	3,603.9	0.463079	3.912441	3,648.1	0.486215	0.080088	3,659.2	0.486227	4.857792	3,639.1	0.463032	7.784092	3,633.2	0.486215	4.832449	3,621.5
0.520868	40.173527	3,603.7	0.486227	4.004748	3,648.0	0.520938	0.084703	3,659.2	0.520949	4.970869	3,639.0	0.486181	7.864861	3,633.1	0.520938	5.026296	3,621.3
0.555590	40.101990	3,603.8	0.520949	4.136287	3,647.9	0.555660	0.082395	3,659.2	0.555671	5.095485	3,638.9	0.520903	8.028708	3,633.0	0.555660	5.208603	3,621.1
0.590312	40.249680	3,603.7	0.555671	4.283979	3,647.7	0.590382	0.114703	3,659.2	0.590394	5.213177	3,638.8	0.555625	8.107169	3,632.9	0.590382	5.317065	3,621.0
0.625035	40.685837	3,603.2	0.590394	4.424748	3,647.6	0.625104	0.114703	3,659.2	0.625116	5.337792	3,638.7	0.590347	8.259477	3,632.7	0.625104	5.483219	3,620.8
0.659757	40.494297	3,603.4	0.625116	4.523979	3,647.5	0.659826	0.114703	3,659.2	0.659838	5.420869	3,638.6	0.625069	8.423323	3,632.6	0.659826	5.653988	3,620.6
0.694479	40.639683	3,603.3	0.659838	4.678595	3,647.3	0.694549	0.135472	3,659.2	0.694560	5.522408	3,638.5	0.659792	8.527169	3,632.5	0.694549	5.836296	3,620.5
0.729549	40.833527	3,603.1	0.694560	4.768594	3,647.2	0.729618	0.123934	3,659.2	0.729630	5.635485	3,638.4	0.694514	8.571015	3,632.4	0.729618	5.974757	3,620.3
0.763924	40.755066	3,603.1	0.729630	4.826287	3,647.2	0.763993	0.147011	3,659.2	0.764005	5.700100	3,638.3	0.729583	8.702554	3,632.3	0.763993	6.064757	3,620.2
0.798646	41.034298	3,602.9	0.764005	4.937056	3,647.1	0.798715	0.181626	3,659.1	0.798727	5.808562	3,638.2	0.763958	8.827168	3,632.2	0.798715	6.212450	3,620.1
0.833368	41.082760	3,602.8	0.798727	5.098594	3,646.9	0.833438	0.200088	3,659.1	0.833449	5.947023	3,638.1	0.798681	8.944861	3,632.1	0.833438	6.332449	3,620.0
0.902814	41.218910	3,602.7	0.833449	5.190902	3,646.8	0.902882	0.234703	3,659.1	0.902893	6.161639	3,637.8	0.833403	9.046400	3,632.0	0.902882	6.581680	3,619.7
0.972951	41.555836	3,602.3	0.902893	5.433210	3,646.6	0.973021	0.204703	3,659.1	0.973032	6.307023	3,637.7	0.902847	9.254092	3,631.7	0.973021	6.800911	3,619.5
1.041701	41.576603	3,602.3	0.973032	5.627056	3,646.4	1.041771	0.276242	3,659.0	1.041782	6.487023	3,637.5	0.972986	9.424861	3,631.6	1.041771	6.907065	3,619.4
1.111146	41.629681	3,602.3	1.041782	5.779364	3,646.2	1.111215	0.310857	3,659.0	1.111227	6.620869	3,637.4	1.041736	9.572554	3,631.4	1.111215	7.170142	3,619.1
1.180590	41.911221	3,602.0	1.111227	5.890133	3,646.1	1.180660	0.340857	3,659.0	1.180671	6.722408	3,637.3	1.111181	9.699476	3,631.3	1.180660	7.343219	3,619.0
1.250035	41.809681	3,602.1	1.180671	6.007825	3,646.0	1.250104	0.391626	3,658.9	1.250116	6.844716	3,637.2	1.180625	9.821784	3,631.2	1.250104	7.516295	3,618.8
1.319479	41.920452	3,602.0	1.250116	6.148594	3,645.9	1.319549	0.417011	3,658.9	1.319560	7.010870	3,637.0	1.250069	10.041015	3,631.0	1.319549	7.650142	3,618.6
1.388924	42.229683	3,601.7	1.319560	6.298594	3,645.7	1.388993	0.430857	3,658.9	1.389005	7.167792	3,636.8	1.319514	10.024861	3,631.0	1.388993	7.786295	3,618.5
1.493090	42.545834	3,601.4	1.389005	6.467056	3,645.5	1.493160	0.463165	3,658.8	1.493171	7.389331	3,636.6	1.388958	10.255630	3,630.7	1.493160	8.090911	3,618.2
1.597257	42.432758	3,601.5	1.493171	6.704748	3,645.3	1.597326	0.557780	3,658.7	1.597338	7.603946	3,636.4	1.493125	10.532554	3,630.5	1.597326	8.335526	3,618.0
1.701424	42.813526	3,601.1	1.597338	6.898594	3,645.1	1.701493	0.580857	3,658.7	1.701505	7.770100	3,636.2	1.597292	10.733323	3,630.3	1.701493	8.522449	3,617.8
1.805590	42.917374	3,601.0	1.701505	7.087825	3,644.9	1.805660	0.627011	3,658.7	1.805671	7.989331	3,636.0	1.701458	10.841784	3,630.2	1.805660	8.739372	3,617.6
1.944479	44.018143	3,599.9	1.805671	7.272440	3,644.7	1.944549	0.735472	3,658.6	1.944560	8.307793	3,635.7	1.805625	11.028708	3,630.0	1.944549	9.013988	3,617.3
2.083368	44.029682	3,599.9	1.944560	7.604748	3,644.4	2.083437	0.830088	3,658.5	2.083449	8.510869	3,635.5	1.944514	11.467169	3,629.5	2.083437	9.277064	3,617.0
2.222257	44.138142	3,599.8	2.083449	7.805518	3,644.2	2.222326	0.807011	3,658.5	2.222338	8.670100	3,635.3	2.083403	11.667938	3,629.3	2.222326	9.452450	3,616.8
2.361146	44.244297	3,599.7	2.222338	7.997056	3,644.0	2.361215	0.996242	3,658.3	2.361227	8.845485	3,635.2	2.222292	11.787938	3,629.2	2.361215	9.558603	3,616.7
2.500035	44.426605	3,599.5	2.361227	8.121672	3,643.9	2.500104	1.086242	3,658.2	2.500116	9.090100	3,634.9	2.361181	11.997938	3,629.0	2.500104	9.870142	3,616.4
2.638924	44.592758	3,599.3	2.500116	8.357056	3,643.6	2.638993	1.217780	3,658.1	2.639005	9.244716	3,634.8	2.500070	12.251784	3,628.7	2.638993	10.087065	3,616.2
2.777813	44.657372	3,599.2	2.639005	8.516287	3,643.5	2.777882	1.210857	3,658.1	2.777894	9.413177	3,634.6	2.638958	12.422553	3,628.6	2.777882	10.220911	3,616.1
2.951423	44.666603	3,599.2	2.777894	8.696287	3,643.3	2.951493	1.381626	3,657.9	2.951505	9.646254	3,634.4	2.777847	12.574862	3,628.4	2.951493	10.474757	3,615.8
3.083843	44.781990	3,599.1	2.951505	8.933979	3,643.1	3.083843	1.480857	3,657.8	3.083843	9.766253	3,634.2	2.951458	12.708707	3,628.3	3.083843	10.599373	3,615.7
			3.083843	9.033210	3,643.0							3.083843	12.953322	3,628.0			

General Methodology: PSI, temperature, and time readings from Win-Situ™ digital data log were exported to Excel ".csv" file.
Drawdown was calculated as PSI at time after pumping minus average PSI before pumping; therefore, at small or zero changes in PSI negative drawdowns may be calculated.
A FORTRAN program was written to read the ".csv" file and produce a second file by extracting the records at a frequency of 40 per log-time cycle (in minutes) in order achieve equal representation of data throughout the pumping and drawdown phases of the test.
Elevation (in ft above mean sea level) based on initial groundwater elevation (see Table 4.2) minus drawdown.

Knight Piésold
CONSULTING

Appendix B-3
Time and Water Level Data Values Used in Pumping Test Analysis: Dewey Test, Recovery Data

This page intentionally left blank

Table B.3-1:
Time and Water Level Data Values Used in Pumping Test Analysis: Dewey Test, Recovery Data

32-3C		3643.9	**GW-49**		3652	**32-4C**		3644.0	**32-5**		3641.0	**32-9C**		3626.3
Time (days)	Drawdown (ft)	Elevation (ft)	Time (days)	Drawdown (ft)	Elevation (ft)	Time (days)	Drawdown (ft)	Elevation (ft)	Time (days)	Drawdown (ft)	Elevation (ft)	Time (days)	Drawdown (ft)	Elevation (ft)
3.083866	42.133311	3,601.8	3.083866	9.035518	3,643.0	3.083889	9.763947	3,634.2	3.083866	12.934861	3,628.1	3.083889	10.606296	3,615.7
3.083877	41.493441	3,602.4	3.083877	9.053979	3,642.9	3.083901	9.766253	3,634.2	3.083877	12.930245	3,628.1	3.083901	10.603988	3,615.7
3.083889	40.624881	3,603.3	3.083889	9.042440	3,643.0	3.083912	9.775485	3,634.2	3.083889	12.925631	3,628.1	3.083912	10.557834	3,615.7
3.083901	39.645441	3,604.3	3.083901	9.063210	3,642.9	3.083924	9.770869	3,634.2	3.083901	12.904861	3,628.1	3.083924	10.585526	3,615.7
3.083912	38.712201	3,605.2	3.083912	9.148595	3,642.9	3.083935	9.768561	3,634.2	3.083912	12.907168	3,628.1	3.083935	10.594757	3,615.7
3.083924	37.792821	3,606.1	3.083924	9.053979	3,642.9	3.083947	9.759331	3,634.2	3.083924	12.914092	3,628.1	3.083947	10.615526	3,615.7
3.083935	36.931191	3,607.0	3.083935	9.058595	3,642.9	3.083958	9.768561	3,634.2	3.083935	12.909476	3,628.1	3.083958	10.564757	3,615.7
3.083947	36.228951	3,607.7	3.083947	9.060902	3,642.9	3.083970	9.768561	3,634.2	3.083947	12.946400	3,628.1	3.083970	10.567065	3,615.7
3.083958	35.328051	3,608.6	3.083958	9.060902	3,642.9	3.083981	9.773177	3,634.2	3.083958	12.918707	3,628.1	3.083981	10.562449	3,615.7
3.083970	34.549581	3,609.4	3.083970	9.028594	3,643.0	3.083993	9.770869	3,634.2	3.083970	12.897938	3,628.1	3.083993	10.638603	3,615.7
3.083982	33.812691	3,610.1	3.083981	9.056287	3,642.9	3.084005	9.775485	3,634.2	3.083981	12.895631	3,628.1	3.084005	10.583219	3,615.7
3.083993	33.055011	3,610.8	3.083993	9.157825	3,642.8	3.084016	9.766253	3,634.2	3.083993	12.944092	3,628.1	3.084016	10.640911	3,615.7
3.084005	32.371251	3,611.5	3.084005	9.042440	3,643.0	3.084028	9.775485	3,634.2	3.084005	12.946400	3,628.1	3.084028	10.525526	3,615.8
3.084016	31.673631	3,612.2	3.084016	9.033210	3,643.0	3.084039	9.768561	3,634.2	3.084016	12.914092	3,628.1	3.084039	10.594757	3,615.7
3.084028	30.980631	3,612.9	3.084028	9.049364	3,643.0	3.084051	9.759331	3,634.2	3.084028	12.955630	3,628.0	3.084051	10.617834	3,615.7
3.084039	30.350001	3,613.5	3.084039	9.051671	3,642.9	3.084062	9.770869	3,634.2	3.084039	12.897938	3,628.1	3.084062	10.666296	3,615.6
3.084051	29.723991	3,614.2	3.084051	9.063210	3,642.9	3.084074	9.770869	3,634.2	3.084051	12.914092	3,628.1	3.084074	10.580911	3,615.7
3.084063	29.162661	3,614.7	3.084062	9.063210	3,642.9	3.084086	9.766253	3,634.2	3.084062	12.909476	3,628.1	3.084086	10.601680	3,615.7
3.084074	28.545891	3,615.4	3.084074	9.051671	3,642.9	3.084097	9.763947	3,634.2	3.084074	12.921015	3,628.1	3.084097	10.599373	3,615.7
3.084086	27.984561	3,615.9	3.084086	9.012441	3,643.0	3.084109	9.770869	3,634.2	3.084086	12.964861	3,628.0	3.084109	10.555527	3,615.7
3.084097	27.448641	3,616.5	3.084097	9.047056	3,643.0	3.084120	9.770869	3,634.2	3.084097	12.939477	3,628.1	3.084120	10.583219	3,615.7
3.084109	26.901171	3,617.0	3.084109	9.028594	3,643.0	3.084132	9.775485	3,634.2	3.084109	12.909476	3,628.1	3.084132	10.562449	3,615.7
3.084120	26.367561	3,617.5	3.084120	9.056287	3,642.9	3.084143	9.761639	3,634.2	3.084120	12.930245	3,628.1	3.084143	10.606296	3,615.7
3.084132	25.877841	3,618.0	3.084132	9.065517	3,642.9	3.084155	9.773177	3,634.2	3.084132	12.891015	3,628.1	3.084155	10.599373	3,615.7
3.084143	25.432011	3,618.5	3.084143	9.051671	3,642.9	3.084167	9.773177	3,634.2	3.084143	12.897938	3,628.1	3.084167	10.599373	3,615.7
3.084155	25.004661	3,618.9	3.084155	9.040133	3,643.0	3.084178	9.773177	3,634.2	3.084155	12.934861	3,628.1	3.084178	10.590141	3,615.7
3.084167	24.496461	3,619.4	3.084167	9.132441	3,642.9	3.084190	9.761639	3,634.2	3.084167	12.897938	3,628.1	3.084190	10.583219	3,615.7
3.084178	24.161511	3,619.7	3.084178	9.012441	3,643.0	3.084201	9.775485	3,634.2	3.084178	12.897938	3,628.1	3.084201	10.578603	3,615.7
3.084190	23.711061	3,620.2	3.084190	9.051671	3,642.9	3.084213	9.768561	3,634.2	3.084190	12.951015	3,628.0	3.084213	10.585526	3,615.7
3.084201	23.359941	3,620.5	3.084201	9.035518	3,643.0	3.084224	9.757023	3,634.2	3.084201	12.916400	3,628.1	3.084224	10.585526	3,615.7
3.084213	22.955691	3,620.9	3.084213	9.063210	3,642.9	3.084236	9.761639	3,634.2	3.084213	12.925631	3,628.1	3.084236	10.606296	3,615.7
3.084224	22.567611	3,621.3	3.084224	9.077056	3,642.9	3.084248	9.768561	3,634.2	3.084224	12.930245	3,628.1	3.084248	10.583219	3,615.7
3.084236	22.262691	3,621.6	3.084236	9.042440	3,643.0	3.084259	9.754716	3,634.2	3.084236	12.918707	3,628.1	3.084259	10.583219	3,615.7
3.084248	21.946221	3,622.0	3.084248	9.047056	3,643.0	3.084282	9.766253	3,634.2	3.084248	12.893323	3,628.1	3.084282	10.597065	3,615.7
3.084271	21.320211	3,622.6	3.084259	9.047056	3,643.0	3.084317	9.773177	3,634.2	3.084259	12.893323	3,628.1	3.084317	10.592449	3,615.7
3.084305	20.518641	3,623.4	3.084282	9.049364	3,643.0	3.084329	9.766253	3,634.2	3.084282	12.937169	3,628.1	3.084329	10.601680	3,615.7
3.084317	20.299191	3,623.6	3.084317	9.067825	3,642.9	3.084352	9.763947	3,634.2	3.084317	12.900246	3,628.1	3.084352	10.603988	3,615.7
3.084340	19.844121	3,624.1	3.084329	9.065517	3,642.9	3.084363	9.759331	3,634.2	3.084329	12.886399	3,628.1	3.084363	10.622449	3,615.7
3.084352	19.626981	3,624.3	3.084352	9.044748	3,643.0	3.084387	9.766253	3,634.2	3.084352	12.895631	3,628.1	3.084387	10.594757	3,615.7
3.084375	19.225041	3,624.7	3.084363	9.035518	3,643.0	3.084398	9.775485	3,634.2	3.084363	12.909476	3,628.1	3.084398	10.564757	3,615.7
3.084386	19.079511	3,624.8	3.084387	9.023979	3,643.0	3.084421	9.770869	3,634.2	3.084387	12.930245	3,628.1	3.084421	10.578603	3,615.7
3.084410	18.739941	3,625.2	3.084398	9.047056	3,643.0	3.084456	9.766253	3,634.2	3.084398	12.918707	3,628.1	3.084456	10.606296	3,615.7
3.084444	18.402681	3,625.5	3.084421	9.141671	3,642.9	3.084491	9.770869	3,634.2	3.084421	12.925631	3,628.1	3.084491	10.583219	3,615.7
3.084479	18.125481	3,625.8	3.084456	9.040133	3,643.0	3.084526	9.766253	3,634.2	3.084456	12.930245	3,628.1	3.084526	10.578603	3,615.7
3.084514	17.938371	3,626.0	3.084491	9.063210	3,642.9	3.084560	9.780100	3,634.2	3.084491	12.914092	3,628.1	3.084560	10.599373	3,615.7
3.084549	17.758191	3,626.1	3.084526	9.063210	3,642.9	3.084595	9.757023	3,634.2	3.084526	12.879477	3,628.1	3.084595	10.585526	3,615.7
3.084583	17.649621	3,626.3	3.084560	9.125518	3,642.9	3.084630	9.763947	3,634.2	3.084560	12.932553	3,628.1	3.084630	10.567065	3,615.7
3.084618	17.520261	3,626.4	3.084595	9.058595	3,642.9	3.084664	9.761639	3,634.2	3.084595	12.932553	3,628.1	3.084664	10.597065	3,615.7
3.084653	17.388591	3,626.5	3.084630	9.033210	3,643.0	3.084699	9.766253	3,634.2	3.084630	12.925631	3,628.1	3.084699	10.601680	3,615.7

Table B.3-1:
Time and Water Level Data Values Used in Pumping Test Analysis: Dewey Test, Recovery Data

32-3C		3643.9	**GW-49**		3652	**32-4C**		3644.0	**32-5**		3641.0	**32-9C**		3626.3
Time (days)	Drawdown (ft)	Elevation (ft)	Time (days)	Drawdown (ft)	Elevation (ft)	Time (days)	Drawdown (ft)	Elevation (ft)	Time (days)	Drawdown (ft)	Elevation (ft)	Time (days)	Drawdown (ft)	Elevation (ft)
3.084688	17.256921	3,626.6	3.084664	9.056287	3,642.9	3.084769	9.766253	3,634.2	3.084664	12.867938	3,628.1	3.084769	10.587834	3,615.7
3.084757	17.035161	3,626.9	3.084699	9.153210	3,642.8	3.084838	9.770869	3,634.2	3.084699	12.909476	3,628.1	3.084838	10.592449	3,615.7
3.084826	16.811091	3,627.1	3.084769	9.077056	3,642.9	3.084907	9.750100	3,634.2	3.084769	12.934861	3,628.1	3.084907	10.599373	3,615.7
3.084896	16.531581	3,627.4	3.084838	9.033210	3,643.0	3.084977	9.754716	3,634.2	3.084838	12.902554	3,628.1	3.084977	10.624757	3,615.7
3.084965	16.325991	3,627.6	3.084907	9.021671	3,643.0	3.085046	9.768561	3,634.2	3.084907	12.851785	3,628.1	3.085046	10.590141	3,615.7
3.085035	16.078821	3,627.8	3.084977	9.042440	3,643.0	3.085116	9.770869	3,634.2	3.084977	12.851785	3,628.1	3.085116	10.583219	3,615.7
3.085104	15.880161	3,628.0	3.085046	9.077056	3,642.9	3.085185	9.768561	3,634.2	3.085046	12.886399	3,628.1	3.085185	10.594757	3,615.7
3.085173	15.803931	3,628.1	3.085116	9.053979	3,642.9	3.085255	9.770869	3,634.2	3.085116	12.844861	3,628.2	3.085255	10.594757	3,615.7
3.085243	15.519801	3,628.4	3.085185	9.074748	3,642.9	3.085359	9.757023	3,634.2	3.085185	12.835630	3,628.2	3.085359	10.610911	3,615.7
3.085347	15.348861	3,628.6	3.085255	9.056287	3,642.9	3.085463	9.752408	3,634.2	3.085255	12.807938	3,628.2	3.085463	10.578603	3,615.7
3.085452	15.247221	3,628.7	3.085359	9.023979	3,643.0	3.085567	9.770869	3,634.2	3.085359	12.796400	3,628.2	3.085567	10.606296	3,615.7
3.085556	15.161751	3,628.7	3.085463	9.033210	3,643.0	3.085671	9.752408	3,634.2	3.085463	12.773323	3,628.2	3.085671	10.617834	3,615.7
3.085660	15.032391	3,628.9	3.085567	9.053979	3,642.9	3.085810	9.752408	3,634.2	3.085567	12.731784	3,628.3	3.085810	10.583219	3,615.7
3.085798	14.916891	3,629.0	3.085671	9.056287	3,642.9	3.085961	9.747792	3,634.3	3.085671	12.674092	3,628.3	3.085961	10.608603	3,615.7
3.085939	14.775981	3,629.1	3.085810	9.040133	3,643.0	3.086088	9.747792	3,634.3	3.085810	12.641785	3,628.4	3.086088	10.633987	3,615.7
3.086076	14.782911	3,629.1	3.085961	9.040133	3,643.0	3.086227	9.740870	3,634.3	3.085961	12.584092	3,628.4	3.086227	10.594757	3,615.7
3.086215	14.810631	3,629.1	3.086088	9.047056	3,643.0	3.086366	9.736254	3,634.3	3.086088	12.537938	3,628.5	3.086366	10.615526	3,615.7
3.086354	14.764431	3,629.1	3.086227	9.021671	3,643.0	3.086505	9.731639	3,634.3	3.086227	12.524092	3,628.5	3.086505	10.627065	3,615.7
3.086493	14.688201	3,629.2	3.086366	9.037826	3,643.0	3.086643	9.729331	3,634.3	3.086366	12.475631	3,628.5	3.086643	10.647834	3,615.7
3.086632	14.623521	3,629.3	3.086505	9.104749	3,642.9	3.086817	9.715485	3,634.3	3.086505	12.429477	3,628.6	3.086817	10.592449	3,615.7
3.086806	14.563461	3,629.3	3.086643	9.042440	3,643.0	3.086991	9.703946	3,634.3	3.086643	12.392553	3,628.6	3.086991	10.599373	3,615.7
3.086979	14.586561	3,629.3	3.086817	9.049364	3,643.0	3.087164	9.703946	3,634.3	3.086817	12.314092	3,628.7	3.087164	10.643219	3,615.7
3.087153	14.496471	3,629.4	3.086991	9.146287	3,642.9	3.087338	9.687793	3,634.3	3.086991	12.321015	3,628.7	3.087338	10.654757	3,615.6
3.087327	14.461821	3,629.4	3.087164	9.058595	3,642.9	3.087570	9.690100	3,634.3	3.087164	12.212553	3,628.8	3.087570	10.622449	3,615.7
3.087558	14.415621	3,629.5	3.087338	9.017056	3,643.0	3.087801	9.667023	3,634.3	3.087338	12.175631	3,628.8	3.087801	10.645526	3,615.7
3.087789	14.350941	3,629.5	3.087570	9.049364	3,643.0	3.088032	9.662408	3,634.3	3.087570	12.117938	3,628.9	3.088032	10.622449	3,615.7
3.088021	14.281641	3,629.6	3.087801	9.060902	3,642.9	3.088264	9.662408	3,634.3	3.087801	12.051015	3,628.9	3.088264	10.615526	3,615.7
3.088252	14.244681	3,629.7	3.088032	9.030902	3,643.0	3.088495	9.639331	3,634.4	3.088032	12.014091	3,629.0	3.088495	10.622449	3,615.7
3.088484	14.184621	3,629.7	3.088264	9.113979	3,642.9	3.088727	9.630100	3,634.4	3.088264	11.949476	3,629.1	3.088727	10.622449	3,615.7
3.088715	14.205411	3,629.7	3.088495	9.044748	3,643.0	3.089074	9.600101	3,634.4	3.088495	11.887169	3,629.1	3.089074	10.594757	3,615.7
3.089062	14.032161	3,629.9	3.088727	9.035518	3,643.0	3.089421	9.600101	3,634.4	3.088727	11.864092	3,629.1	3.089421	10.599373	3,615.7
3.089410	14.025231	3,629.9	3.089074	9.060902	3,642.9	3.089768	9.570100	3,634.4	3.089074	11.815630	3,629.2	3.089768	10.576296	3,615.7
3.089757	13.847361	3,630.1	3.089421	9.051671	3,642.9	3.090116	9.558561	3,634.4	3.089421	11.762553	3,629.2	3.090116	10.580911	3,615.7
3.090104	12.685431	3,631.2	3.089768	9.042440	3,643.0	3.090463	9.535484	3,634.5	3.089768	11.658708	3,629.3	3.090463	10.615526	3,615.7
3.090451	12.315831	3,631.6	3.090116	9.047056	3,643.0	3.090810	9.512407	3,634.5	3.090116	11.617168	3,629.4	3.090810	10.594757	3,615.7
3.090799	12.163371	3,631.7	3.090463	9.040133	3,643.0	3.091157	9.500870	3,634.5	3.090463	11.511015	3,629.5	3.091157	10.587834	3,615.7
3.091146	12.066351	3,631.8	3.090810	9.100133	3,642.9	3.091505	9.473177	3,634.5	3.090810	11.492554	3,629.5	3.091505	10.585526	3,615.7
3.091493	11.960091	3,631.9	3.091157	9.060902	3,642.9	3.091852	9.459331	3,634.5	3.091157	11.439477	3,629.6	3.091852	10.567065	3,615.7
3.091840	12.001671	3,631.9	3.091505	9.063210	3,642.9	3.092199	9.440869	3,634.6	3.091505	11.342553	3,629.7	3.092199	10.562449	3,615.7
3.092187	11.782221	3,632.1	3.091852	9.058595	3,642.9	3.092893	9.413177	3,634.6	3.091852	11.296400	3,629.7	3.092893	10.530142	3,615.8
3.092882	11.675961	3,632.2	3.092199	9.060902	3,642.9	3.093588	9.364716	3,634.6	3.092199	11.261785	3,629.7	3.093588	10.520911	3,615.8
3.093576	11.574321	3,632.3	3.092893	9.042440	3,643.0	3.094282	9.337023	3,634.7	3.092893	11.178707	3,629.8	3.094282	10.490911	3,615.8
3.094271	11.470371	3,632.4	3.093588	9.067825	3,642.9	3.094977	9.295485	3,634.7	3.093588	11.049477	3,630.0	3.094977	10.453988	3,615.8
3.094965	11.331771	3,632.6	3.094282	9.072440	3,642.9	3.095683	9.256254	3,634.7	3.094282	10.952554	3,630.0	3.095683	10.488604	3,615.8
3.095671	11.375661	3,632.5	3.094977	9.056287	3,642.9	3.096366	9.233177	3,634.8	3.094977	10.869476	3,630.1	3.096366	10.414757	3,615.9
3.096354	11.204721	3,632.7	3.095683	9.023979	3,643.0	3.097060	9.189331	3,634.8	3.095683	10.823322	3,630.2	3.097060	10.382449	3,615.9
3.097049	11.160831	3,632.7	3.096366	9.056287	3,642.9	3.097755	9.161638	3,634.8	3.096366	10.703322	3,630.3	3.097755	10.363988	3,615.9
3.097743	11.103081	3,632.8	3.097060	9.030902	3,643.0	3.098796	9.108562	3,634.9	3.097060	10.613322	3,630.4	3.098796	10.373219	3,615.9
3.098785	11.001441	3,632.9	3.097755	9.049364	3,643.0	3.099838	9.073946	3,634.9	3.097755	10.592553	3,630.4	3.099838	10.292449	3,616.0

Table B.3-1:
Time and Water Level Data Values Used in Pumping Test Analysis: Dewey Test, Recovery Data

32-3C		3643.9	**GW-49**		3652	**32-4C**		3644.0	**32-5**		3641.0	**32-9C**		3626.3
Time (days)	Drawdown (ft)	Elevation (ft)	Time (days)	Drawdown (ft)	Elevation (ft)	Time (days)	Drawdown (ft)	Elevation (ft)	Time (days)	Drawdown (ft)	Elevation (ft)	Time (days)	Drawdown (ft)	Elevation (ft)
3.099826	10.885941	3,633.0	3.098796	9.148595	3,642.9	3.100880	9.013947	3,635.0	3.098796	10.463323	3,630.5	3.100880	10.287834	3,616.0
3.100868	10.761201	3,633.1	3.099838	9.118594	3,642.9	3.101921	8.970100	3,635.0	3.099838	10.435631	3,630.6	3.101921	10.225526	3,616.1
3.101910	10.719621	3,633.2	3.100880	9.070133	3,642.9	3.103310	8.910100	3,635.1	3.100880	10.322554	3,630.7	3.103310	10.264757	3,616.0
3.103299	10.511721	3,633.4	3.101921	9.017056	3,643.0	3.104699	8.857023	3,635.1	3.101921	10.255630	3,630.7	3.104699	10.188603	3,616.1
3.104687	10.403151	3,633.5	3.103310	9.123210	3,642.9	3.106088	8.808561	3,635.2	3.103310	10.119476	3,630.9	3.106088	10.147065	3,616.2
3.106076	10.289961	3,633.6	3.104699	9.047056	3,643.0	3.107477	8.762407	3,635.2	3.104699	10.043323	3,631.0	3.107477	10.093987	3,616.2
3.107465	10.206801	3,633.7	3.106088	9.026287	3,643.0	3.108866	8.713946	3,635.3	3.106088	9.957938	3,631.0	3.108866	10.070910	3,616.2
3.108854	10.116711	3,633.8	3.107477	8.998594	3,643.0	3.110255	8.658562	3,635.3	3.107477	9.946400	3,631.1	3.110255	10.063988	3,616.2
3.110243	9.950391	3,633.9	3.108866	9.095517	3,642.9	3.111643	8.628562	3,635.4	3.108866	9.780246	3,631.2	3.111643	10.031680	3,616.3
3.111632	9.878781	3,634.0	3.110255	8.989364	3,643.0	3.113380	8.563946	3,635.4	3.110255	9.717938	3,631.3	3.113380	10.001680	3,616.3
3.113368	9.719391	3,634.2	3.111643	8.970902	3,643.0	3.115116	8.520100	3,635.5	3.111643	9.648707	3,631.4	3.115116	9.946296	3,616.4
3.115104	9.532281	3,634.4	3.113380	9.074748	3,642.9	3.116852	8.462408	3,635.5	3.113380	9.561015	3,631.4	3.116852	9.893219	3,616.4
3.116840	9.310521	3,634.6	3.115116	9.012441	3,643.0	3.118588	8.402408	3,635.6	3.115116	9.473323	3,631.5	3.118588	9.851680	3,616.4
3.118576	9.218121	3,634.7	3.116852	8.963979	3,643.0	3.120903	8.344715	3,635.7	3.116852	9.447938	3,631.6	3.120903	9.807834	3,616.5
3.120891	9.091071	3,634.8	3.118588	9.047056	3,643.0	3.123217	8.287024	3,635.7	3.118588	9.339477	3,631.7	3.123217	9.782450	3,616.5
3.123206	9.116481	3,634.8	3.120903	9.014749	3,643.0	3.125532	8.243177	3,635.8	3.120903	9.277169	3,631.7	3.125532	9.720141	3,616.6
3.125521	8.975571	3,634.9	3.123217	8.959364	3,643.0	3.127847	8.173946	3,635.8	3.123217	9.147938	3,631.9	3.127847	9.676295	3,616.6
3.127836	8.890101	3,635.0	3.125532	8.846287	3,643.2	3.130162	8.123177	3,635.9	3.125532	9.067169	3,631.9	3.130162	9.680911	3,616.6
3.130150	8.834661	3,635.1	3.127847	8.825518	3,643.2	3.132477	8.077024	3,635.9	3.127847	9.011785	3,632.0	3.132477	9.648603	3,616.7
3.132465	8.751501	3,635.1	3.130162	8.807055	3,643.2	3.135949	8.007792	3,636.0	3.130162	8.935631	3,632.1	3.135949	9.521680	3,616.8
3.135937	8.700681	3,635.2	3.132477	8.848595	3,643.2	3.139421	7.938561	3,636.1	3.132477	8.887169	3,632.1	3.139421	9.477834	3,616.8
3.139410	8.594421	3,635.3	3.135949	8.721671	3,643.3	3.142893	7.878561	3,636.1	3.135949	8.790246	3,632.2	3.142893	9.431680	3,616.9
3.142882	8.522811	3,635.4	3.139421	8.788594	3,643.2	3.146366	7.825485	3,636.2	3.139421	8.695630	3,632.3	3.146366	9.380911	3,616.9
3.146354	8.435031	3,635.5	3.142893	8.640903	3,643.4	3.149838	7.765485	3,636.2	3.142893	8.603323	3,632.4	3.149838	9.290911	3,617.0
3.149826	8.405001	3,635.5	3.146366	8.564748	3,643.4	3.153310	7.707792	3,636.3	3.146366	8.541015	3,632.5	3.153310	9.265527	3,617.0
3.153299	8.287191	3,635.6	3.149838	8.550902	3,643.4	3.156782	7.661639	3,636.3	3.149838	8.448708	3,632.6	3.156782	9.203218	3,617.1
3.156771	8.217891	3,635.7	3.153310	8.493210	3,643.5	3.160301	7.615485	3,636.4	3.153310	8.377169	3,632.6	3.160255	9.131680	3,617.2
3.160243	8.190171	3,635.7	3.156829	8.467825	3,643.5	3.163773	7.569331	3,636.4	3.156782	8.351784	3,632.6	3.163762	9.136295	3,617.2
3.163715	8.109321	3,635.8	3.160301	8.456286	3,643.5	3.167361	7.523177	3,636.5	3.160255	8.268707	3,632.7	3.167350	9.071680	3,617.2
3.167268	8.042331	3,635.9	3.163773	8.370902	3,643.6	3.174421	7.435485	3,636.6	3.163727	8.229477	3,632.8	3.174410	8.947064	3,617.4
3.174329	7.991511	3,635.9	3.167361	8.366286	3,643.6	3.181250	7.345485	3,636.7	3.167315	8.079476	3,632.9	3.181238	8.877834	3,617.4
3.181157	7.859841	3,636.0	3.174421	8.211671	3,643.8	3.188194	7.283177	3,636.7	3.174375	8.051785	3,632.9	3.188183	8.697834	3,617.6
3.188102	7.746651	3,636.2	3.181250	8.133210	3,643.9	3.195139	7.202408	3,636.8	3.181204	7.917938	3,633.1	3.195127	8.686296	3,617.6
3.195046	7.614981	3,636.3	3.188194	8.057055	3,643.9	3.202083	7.091639	3,636.9	3.188148	7.804861	3,633.2	3.202072	8.637834	3,617.7
3.201991	7.612671	3,636.3	3.195139	7.948595	3,644.1	3.209028	7.057023	3,636.9	3.195092	7.744861	3,633.3	3.209016	8.547834	3,617.8
3.208935	7.501791	3,636.4	3.202083	7.874748	3,644.1	3.215972	6.999331	3,637.0	3.202037	7.645630	3,633.4	3.215961	8.473988	3,617.8
3.215880	7.404771	3,636.5	3.209028	7.752440	3,644.2	3.222917	6.932408	3,637.1	3.208981	7.583323	3,633.4	3.222905	8.377065	3,617.9
3.222824	7.360881	3,636.5	3.215972	7.724748	3,644.3	3.233333	6.840100	3,637.2	3.215926	7.502553	3,633.5	3.233322	8.268603	3,618.0
3.233241	7.215351	3,636.7	3.222917	7.625517	3,644.4	3.243750	6.773177	3,637.2	3.222870	7.449477	3,633.6	3.243738	8.171680	3,618.1
3.243657	7.150671	3,636.7	3.233333	7.526287	3,644.5	3.254167	6.715485	3,637.3	3.233287	7.225630	3,633.8	3.254155	8.056295	3,618.2
3.254074	7.060581	3,636.8	3.243750	7.408595	3,644.6	3.264583	6.641639	3,637.4	3.243704	7.188707	3,633.8	3.264572	7.980142	3,618.3
3.264491	6.986661	3,636.9	3.254167	7.297825	3,644.7	3.278472	6.540100	3,637.5	3.254120	7.114861	3,633.9	3.278461	7.827834	3,618.5
3.278380	6.873471	3,637.0	3.264583	7.189363	3,644.8	3.292361	6.457023	3,637.5	3.264537	6.939476	3,634.1	3.292350	7.747065	3,618.6
3.292268	6.755661	3,637.1	3.278472	7.041671	3,645.0	3.306250	6.392408	3,637.6	3.278426	6.918707	3,634.1	3.306238	7.645526	3,618.7
3.306157	6.684051	3,637.2	3.292361	6.960902	3,645.0	3.320139	6.270100	3,637.7	3.292315	6.798707	3,634.2	3.320127	7.509372	3,618.8
3.320046	6.575481	3,637.3	3.306250	6.866287	3,645.1	3.334028	6.203177	3,637.8	3.306204	6.701784	3,634.3	3.334016	7.451680	3,618.8
3.333935	6.462291	3,637.4	3.320139	6.737056	3,645.3	3.347917	6.122408	3,637.9	3.320092	6.600246	3,634.4	3.347905	7.264757	3,619.0
3.347824	6.448431	3,637.5	3.334028	6.633210	3,645.4	3.361806	6.062408	3,637.9	3.333981	6.503323	3,634.5	3.361794	7.234757	3,619.1
3.361713	6.295971	3,637.6	3.347917	6.524748	3,645.5	3.379167	6.025485	3,638.0	3.347870	6.369476	3,634.6	3.379155	7.123988	3,619.2

Table B.3-1:
Time and Water Level Data Values Used in Pumping Test Analysis: Dewey Test, Recovery Data

32-3C		3643.9	**GW-49**		3652	**32-4C**		3644.0	**32-5**		3641.0	**32-9C**		3626.3
Time (days)	Drawdown (ft)	Elevation (ft)	Time (days)	Drawdown (ft)	Elevation (ft)	Time (days)	Drawdown (ft)	Elevation (ft)	Time (days)	Drawdown (ft)	Elevation (ft)	Time (days)	Drawdown (ft)	Elevation (ft)
3.379074	6.265941	3,637.6	3.361806	6.471671	3,645.5	3.396528	5.949331	3,638.1	3.361759	6.327938	3,634.7	3.396516	7.024757	3,619.3
3.396435	6.166611	3,637.7	3.379167	6.328594	3,645.7	3.413889	5.889331	3,638.1	3.379120	6.270246	3,634.7	3.413877	6.925526	3,619.4
3.413796	6.023391	3,637.9	3.396528	6.284748	3,645.7	3.431250	5.817792	3,638.2	3.396481	6.159477	3,634.8	3.431238	6.793988	3,619.5
3.431157	6.060351	3,637.8	3.413889	6.167056	3,645.8	3.454398	5.750869	3,638.2	3.413842	6.083323	3,634.9	3.454387	6.690142	3,619.6
3.454306	5.935611	3,638.0	3.431250	6.081671	3,645.9	3.477546	5.667792	3,638.3	3.431204	6.027938	3,635.0	3.477535	6.593219	3,619.7
3.477454	5.778531	3,638.1	3.454398	5.966287	3,646.0	3.500694	5.593946	3,638.4	3.454352	5.850246	3,635.1	3.500683	6.477834	3,619.8
3.500602	5.746191	3,638.2	3.477546	5.910902	3,646.1	3.523958	5.536254	3,638.5	3.477500	5.861784	3,635.1	3.523947	6.403988	3,619.9
3.523866	5.702301	3,638.2	3.500694	5.781672	3,646.2	3.546991	5.471639	3,638.5	3.500648	5.757938	3,635.2	3.546979	6.247065	3,620.1
3.546898	5.623761	3,638.3	3.523958	5.774748	3,646.2	3.570139	5.413946	3,638.6	3.523912	5.688707	3,635.3	3.570127	6.173219	3,620.1
3.570046	5.556771	3,638.3	3.546991	5.721671	3,646.3	3.604861	5.330869	3,638.7	3.546945	5.568707	3,635.4	3.604850	6.060142	3,620.2
3.604768	5.480541	3,638.4	3.570139	5.523210	3,646.5	3.639583	5.240870	3,638.8	3.570092	5.527169	3,635.5	3.639572	5.910141	3,620.4
3.639491	5.369661	3,638.5	3.604861	5.433210	3,646.6	3.674306	5.155485	3,638.8	3.604815	5.455630	3,635.5	3.674294	5.700142	3,620.6
3.674213	5.231061	3,638.7	3.639583	5.322441	3,646.7	3.709028	5.047023	3,639.0	3.639537	5.310246	3,635.7	3.709016	5.658603	3,620.6
3.708935	5.138661	3,638.8	3.674306	5.269363	3,646.7	3.743750	4.991639	3,639.0	3.674259	5.241015	3,635.8	3.743738	5.527065	3,620.8
3.743657	5.069361	3,638.8	3.709028	5.172441	3,646.8	3.778472	4.931639	3,639.1	3.708981	5.155631	3,635.8	3.778461	5.427834	3,620.9
3.778380	5.030091	3,638.9	3.743750	5.036287	3,647.0	3.813542	4.873946	3,639.1	3.743704	5.001015	3,636.0	3.813530	5.395526	3,620.9
3.813449	4.916901	3,639.0	3.778472	4.967056	3,647.0	3.847917	4.811638	3,639.2	3.778426	4.975630	3,636.0	3.847905	5.270911	3,621.0
3.847824	4.900731	3,639.0	3.813542	4.890902	3,647.1	3.882639	4.767792	3,639.2	3.813495	4.941015	3,636.1	3.882627	5.180911	3,621.1
3.882546	4.856841	3,639.0	3.847917	4.853979	3,647.1	3.917361	4.726254	3,639.3	3.847870	4.864861	3,636.1	3.917350	5.148603	3,621.2
3.917268	4.782921	3,639.1	3.882639	4.784748	3,647.2	3.986806	4.633946	3,639.4	3.882592	4.846400	3,636.2	3.986794	4.952449	3,621.3
3.986713	4.655871	3,639.2	3.917361	4.724748	3,647.3	4.056944	4.543946	3,639.5	3.917315	4.733323	3,636.3	4.056933	4.825526	3,621.5
4.056852	4.651251	3,639.2	3.986806	4.727056	3,647.3	4.125694	4.444715	3,639.6	3.986759	4.657169	3,636.3	4.125683	4.723988	3,621.6
4.125602	4.512651	3,639.4	4.056944	4.540133	3,647.5	4.195139	4.301639	3,639.7	4.056898	4.594861	3,636.4	4.195127	4.523219	3,621.8
4.195046	4.337091	3,639.6	4.125694	4.413210	3,647.6	4.264583	4.211638	3,639.8	4.125648	4.511784	3,636.5	4.264572	4.465526	3,621.8
4.264491	4.274721	3,639.6	4.195139	4.293210	3,647.7	4.334028	4.110100	3,639.9	4.195092	4.366400	3,636.6	4.334016	4.317834	3,622.0
4.333935	4.221591	3,639.7	4.264583	4.267825	3,647.7	4.403472	4.029331	3,640.0	4.264537	4.248707	3,636.8	4.403461	4.181680	3,622.1
4.403380	4.076061	3,639.8	4.334028	4.092441	3,647.9	4.472917	3.985485	3,640.0	4.333981	4.126400	3,636.9	4.472905	4.163218	3,622.1
4.472824	4.020621	3,639.9	4.403472	4.069364	3,647.9	4.577083	3.886254	3,640.1	4.403426	4.041015	3,637.0	4.577072	4.031680	3,622.3
4.576991	3.875091	3,640.0	4.472917	3.983979	3,648.0	4.681250	3.775485	3,640.2	4.472870	4.015630	3,637.0	4.681238	3.842449	3,622.5
4.681157	3.849681	3,640.1	4.577083	3.843210	3,648.2	4.785417	3.662408	3,640.3	4.577037	3.826400	3,637.2	4.785405	3.727065	3,622.6
4.785324	3.715701	3,640.2	4.681250	3.732440	3,648.3	4.889583	3.574715	3,640.4	4.681204	3.810246	3,637.2	4.889572	3.669373	3,622.6
4.889491	3.604821	3,640.3	4.785417	3.598594	3,648.4	5.028472	3.431638	3,640.6	4.785370	3.639477	3,637.4	5.028461	3.487065	3,622.8
5.028380	3.558621	3,640.3	4.889583	3.492440	3,648.5	5.167361	3.279331	3,640.7	4.889537	3.597938	3,637.4	5.167350	3.362449	3,622.9
5.167268	3.357651	3,640.5	5.028472	3.407056	3,648.6	5.306250	3.076254	3,640.9	5.028426	3.466400	3,637.5	5.306238	3.157065	3,623.1
5.306157	3.154371	3,640.7	5.167361	3.323979	3,648.7	5.445139	2.944715	3,641.1	5.167315	3.309477	3,637.7	5.445127	2.960911	3,623.3
5.445046	2.997291	3,640.9	5.306250	3.130133	3,648.9	5.584028	2.810869	3,641.2	5.306204	3.092553	3,637.9	5.584016	2.917065	3,623.4
5.583935	2.837901	3,641.1	5.445139	2.869364	3,649.1	5.722917	2.674716	3,641.3	5.445092	2.947169	3,638.1	5.722905	2.713988	3,623.6
5.722824	2.738571	3,641.2	5.584028	2.777056	3,649.2	5.861806	2.552408	3,641.4	5.583981	2.852553	3,638.1	5.861794	2.582449	3,623.7
5.861713	2.653101	3,641.2	5.722917	2.622441	3,649.4	6.008217	2.469331	3,641.5	5.722871	2.661015	3,638.3	6.008206	2.513219	3,623.8
6.008125	2.521431	3,641.4	5.861806	2.479364	3,649.5				5.861759	2.497169	3,638.5			
			6.008217	2.403210	3,649.6				6.008171	2.494861	3,638.5			

General Methodology: PSI, temperature, and time readings from Win-Situ™ digital data log were exported to Excel ".csv" file.
Drawdown was calculated as PSI at time after pumping minus average PSI before pumping; therefore, at small or zero changes in PSI negative drawdowns may be calculated.
A FORTRAN program was written to read the ".csv" file and produce a second file by extracting the records at a frequency of 40 per log-time cycle (in minutes) in order achieve equal representation of data throughout the pumping and drawdown phases of the test.
Elevation (in ft above mean sea level) based on initial groundwater elevation (see Table 4.2) minus drawdown.

Knight Piésold
CONSULTING

Appendix B-4
Additional Aquifer Parameter Determinations

This page intentionally left blank

Theis

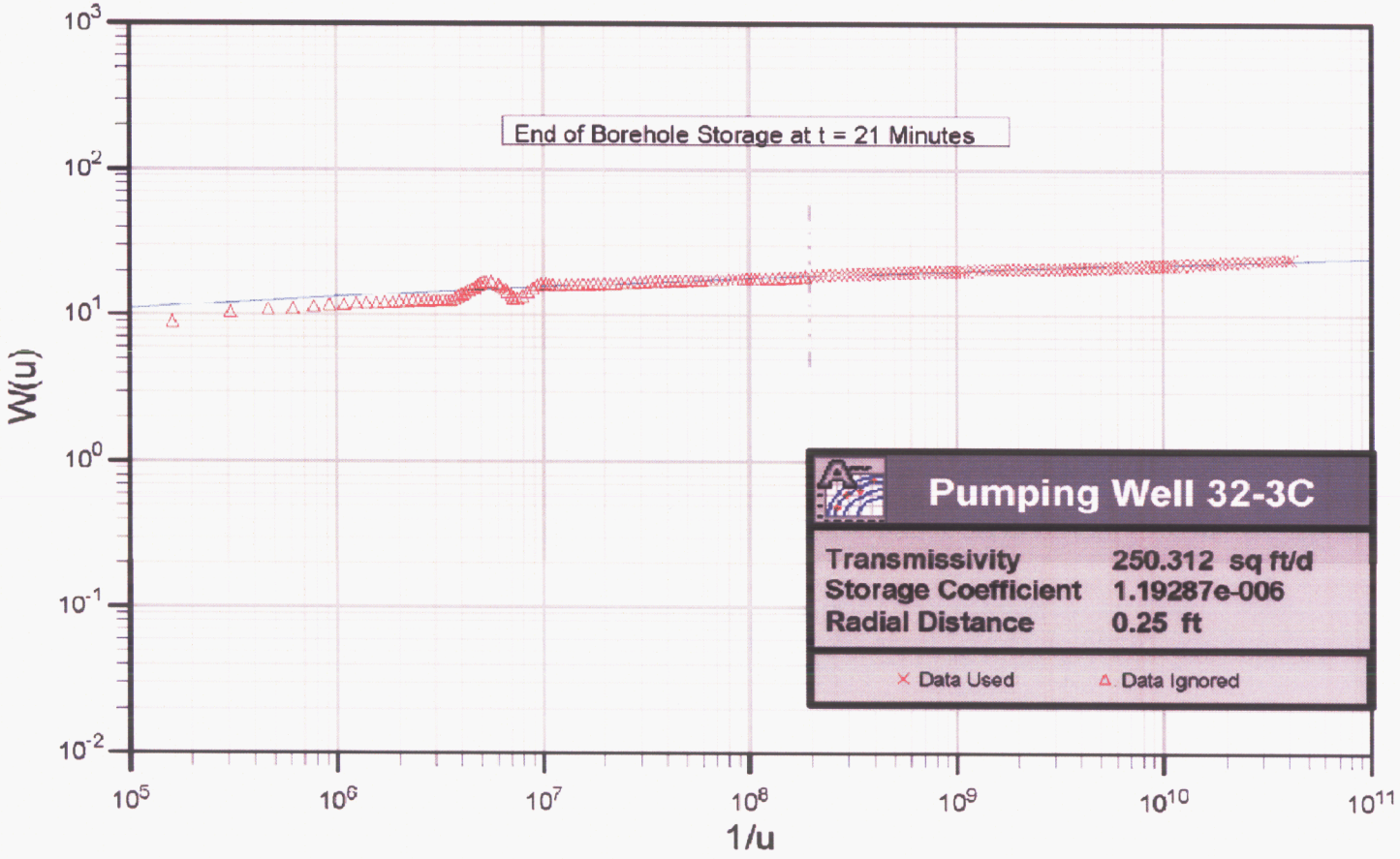

Client	Project	Title	
Knight Piésold CONSULTING	DEWEY-BURDOCK HYDROGEOLOGIC TESTING REPORT	Theis Drawdown Analysis at Dewey Pumping Well 32-3C	
	Project No: DV10200279.01	Date: 10/16/08	Appendix B, Figure B.4-1

G:\102\00279.01\A\Reports Specs\KP\All Reports\Work in Progress\Hydrogeologic Testing Report\Appendices\Appendix B\Appendix B.4-1 Theis 32-3C.xls 10/16/2008

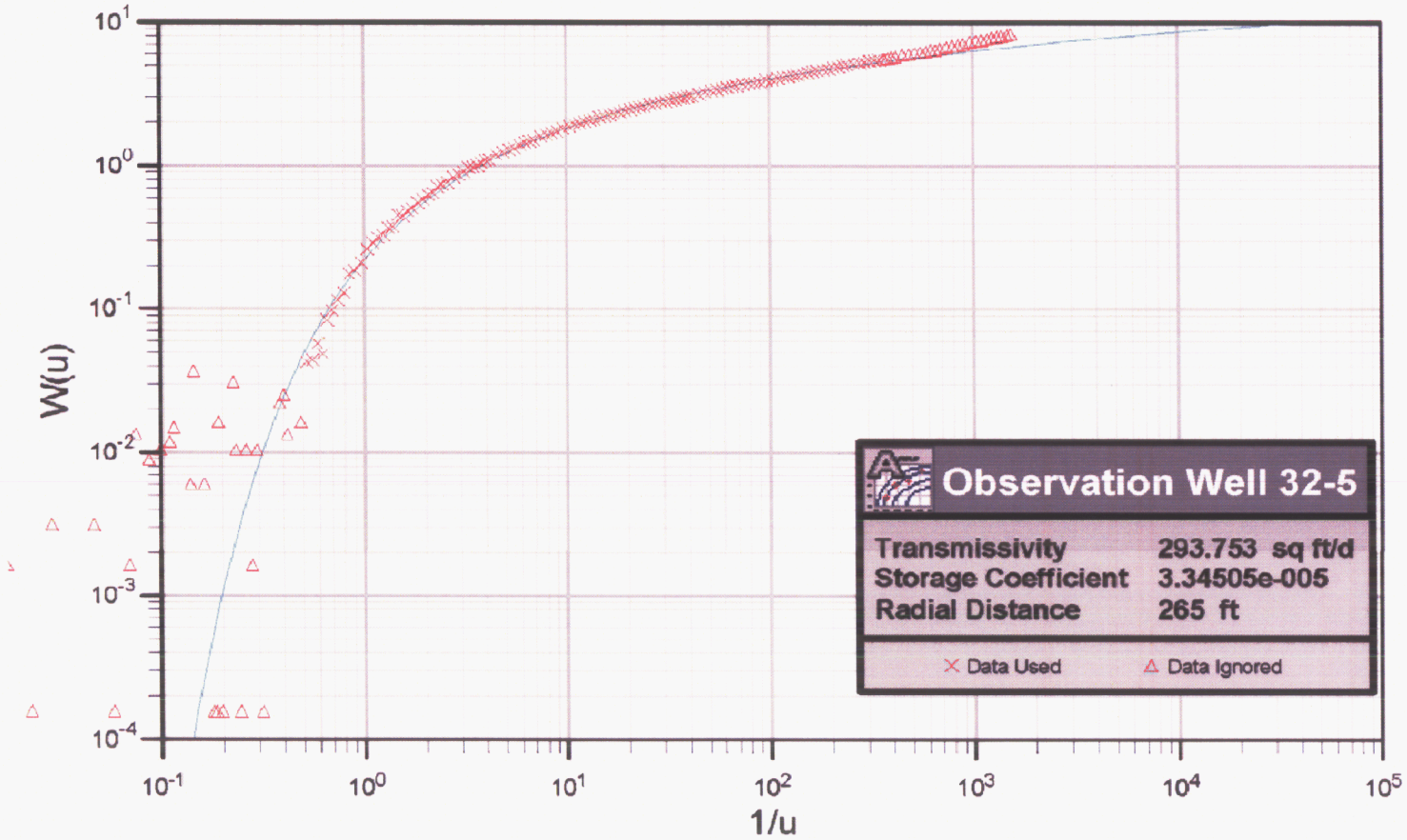

Client	Project	Title	
Knight Piésold CONSULTING	DEWEY-BURDOCK HYDROGEOLOGIC TESTING REPORT	Theis Drawdown Analysis at Dewey Observation Well 32-5	
	Project No: DV10200279.01	Date: 10/16/08	Appendix B, Figure B.4-2

G:\102\00279.01\A\Reports Specs\KP\All Reports\Work in Progress\Hydrogeologic Testing Report\Appendices\Appendix B\Appendix B.4-2 Theis 32-5.xls 10/16/2008

Theis

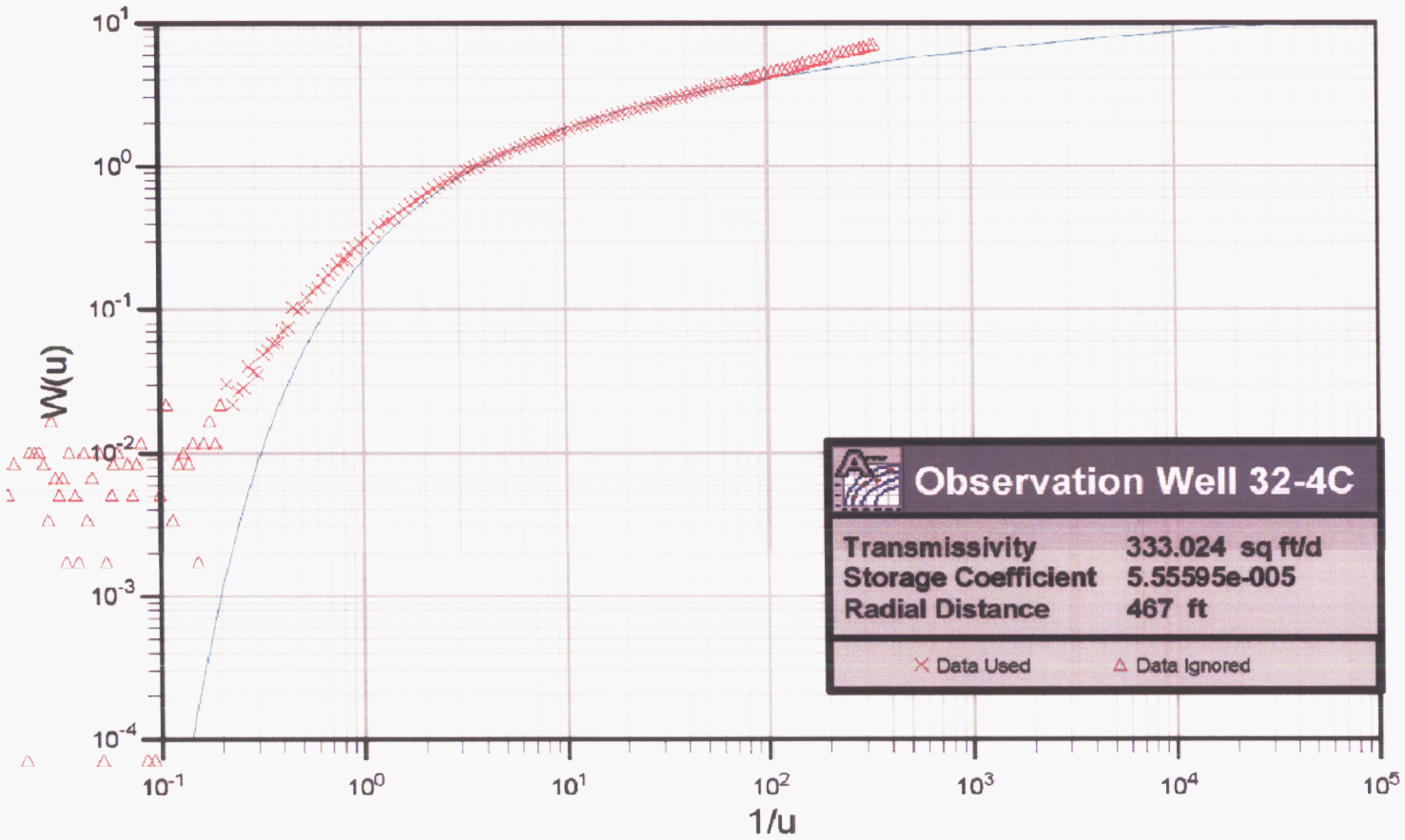

Client	Project	Title	
Knight Piésold CONSULTING	DEWEY-BURDOCK HYDROGEOLOGIC TESTING REPORT	Theis Drawdown Analysis at Dewey Observation Well 32-4C	
	Project No: DV10200279.01	Date: 10/16/08	Appendix B, Figure B.4-3

G:\102\00279.01\A\Reports Specs\KP\All Reports\Work in Progress\Hydrogeologic Testing Report\Appendices\Appendix B\Appendix B.4-3 Theis 32-4C.xls 10/16/2008

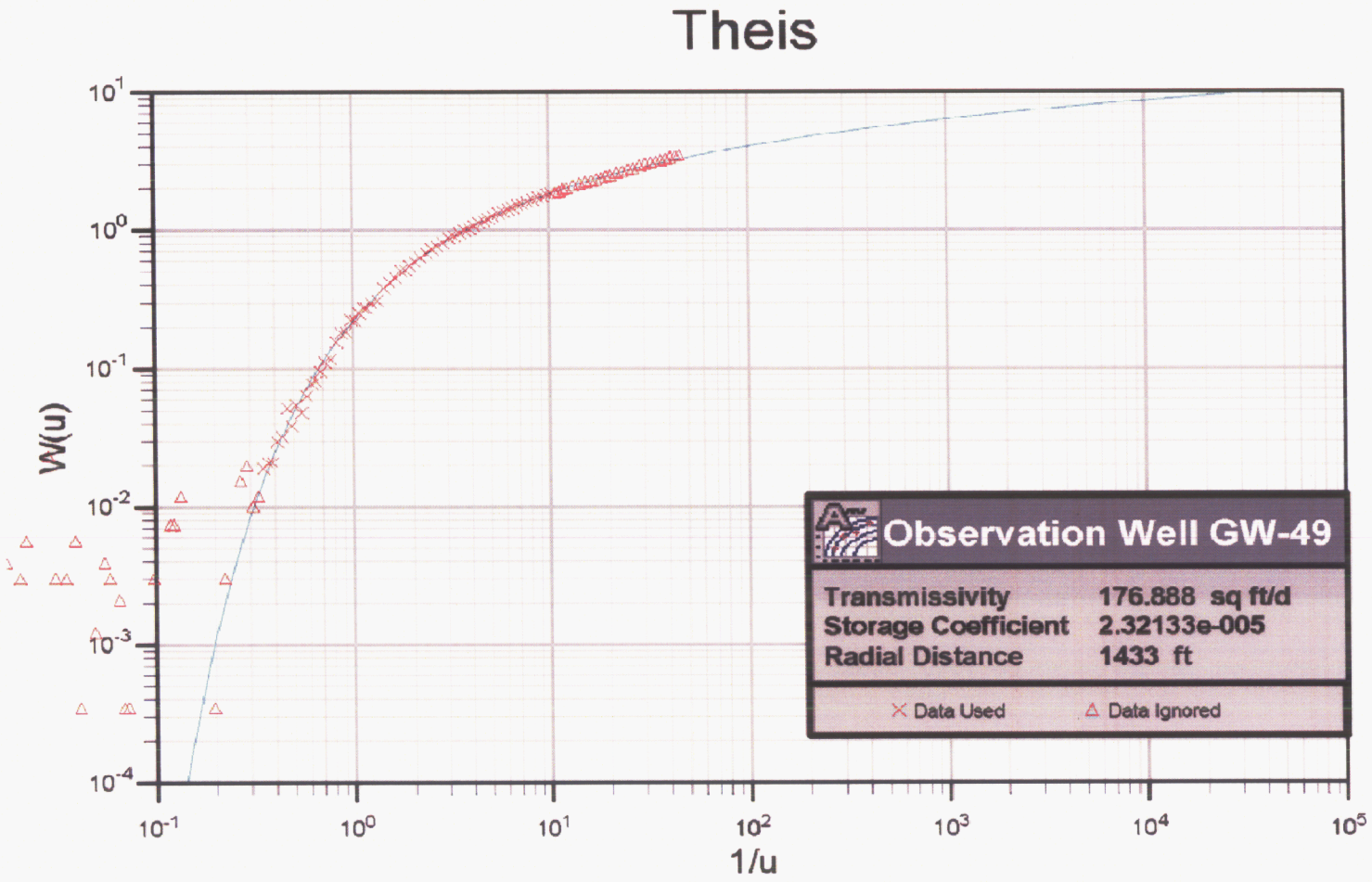

Client	Project	Title	
Knight Piésold CONSULTING	DEWEY-BURDOCK HYDROGEOLOGIC TESTING REPORT	Theis Drawdown Analysis at Dewey Stock Well GW-49	
	Project No: DV10200279.01	Date: 10/16/08	Appendix B, Figure B.4-4

G:\102\00279.01\A\Reports Specs\KP\All Reports\Work in Progress\Hydrogeologic Testing Report\Appendices\Appendix B\Appendix B.4-4 Theis GW-49.xls 10/16/2008

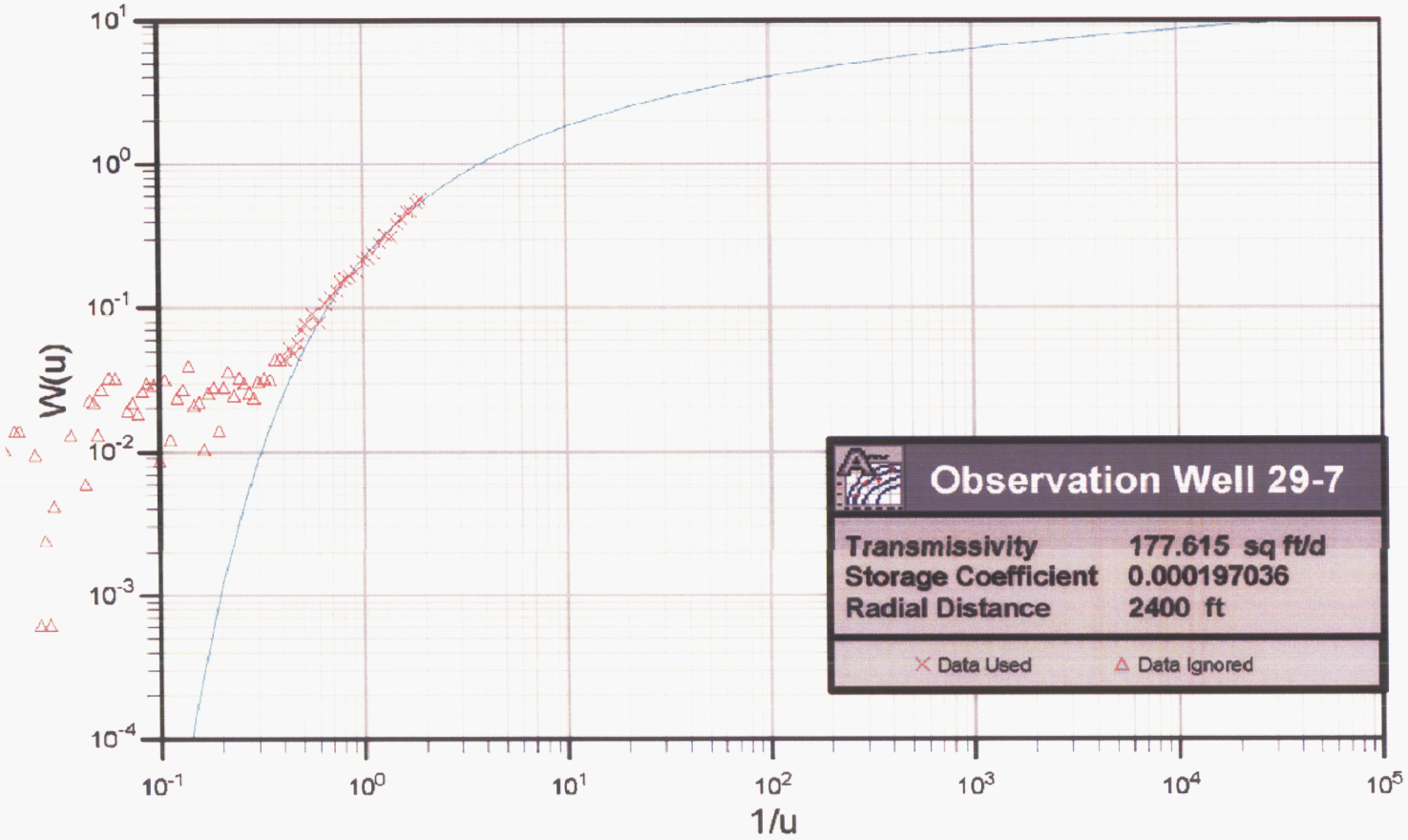

Client	Project	Title	
Knight Piésold CONSULTING	DEWEY-BURDOCK HYDROGEOLOGIC TESTING REPORT	Theis Drawdown Analysis at Dewey Observation Well 29-7	
	Project No: DV10200279.01	Date: 10/16/08	Appendix B, Figure B.4-5

G:\102\00279.01\A\Reports Specs\KP\All Reports\Work in Progress\Hydrogeologic Testing Report\Appendices\Appendix B\Appendix B.4-5 Theis 29-7.xls 10/16/2008

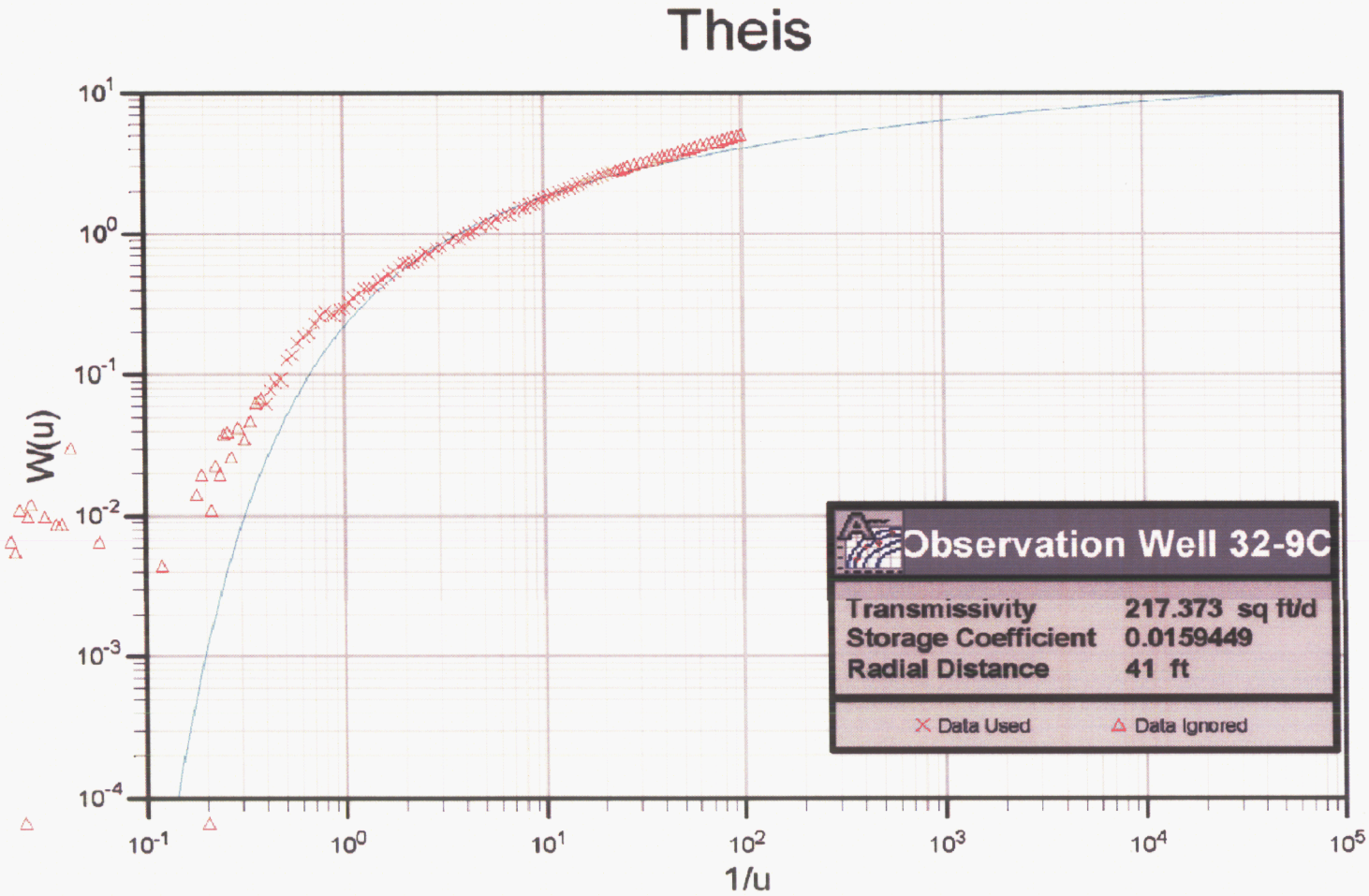

Client	Project	Title	
Knight Piésold CONSULTING	DEWEY-BURDOCK HYDROGEOLOGIC TESTING REPORT	Theis Drawdown Analysis at Dewey Upper Fall River Observation Well 32-9C	
	Project No: DV10200279.01	Date: 10/16/08	Appendix B, Figure B.4-6

G:\102\00279.01\A\Reports Specs\KP\All Reports\Work in Progress\Hydrogeologic Testing Report\Appendices\Appendix B\Appendix B.4-6 Theis 32-9C.xls 10/16/2008

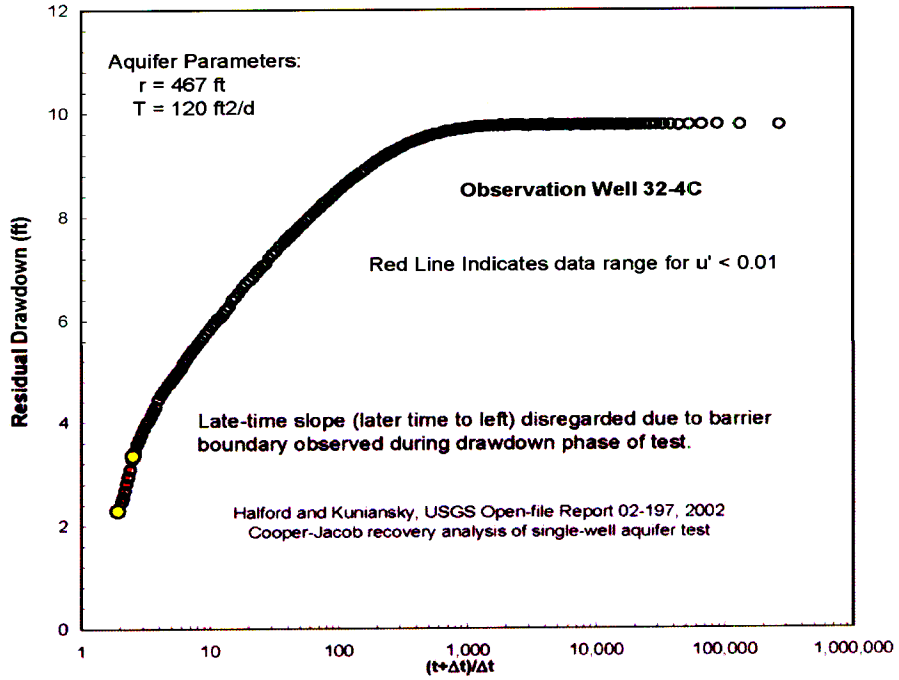

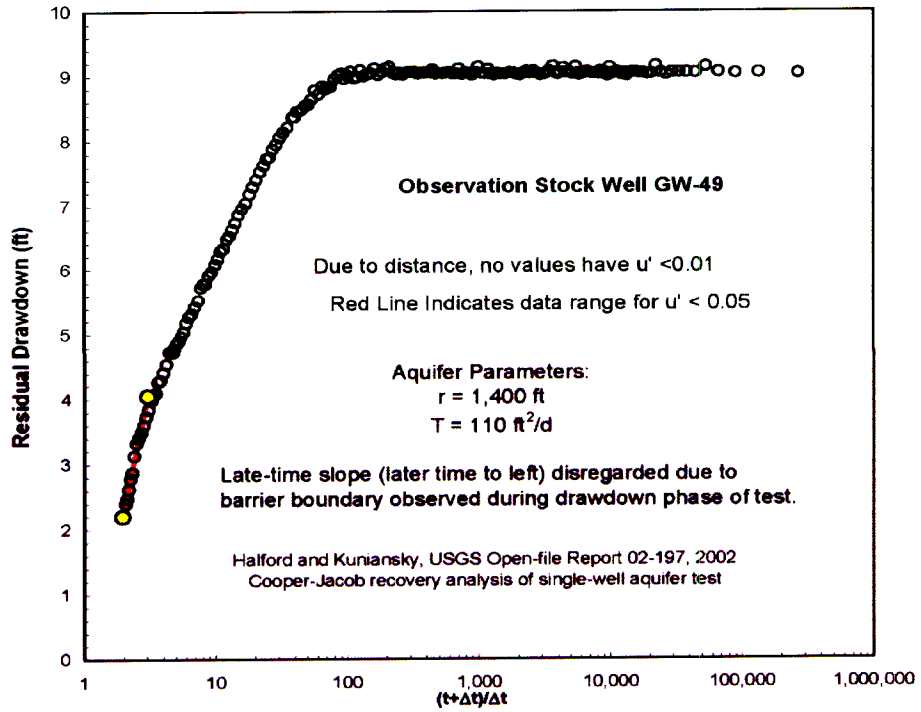

Client	Project	Title	
Knight Piésold CONSULTING	DEWEY-BURDOCK HYDROGEOLOGIC TESTING REPORT	Theis-Cooper-Jacob Recovery Analyses, Dewey Observation Wells 32-4C and GW-49	
	Project No: DV10200279.01	Date: 10/16/08	Appendix B Figure B.4-7

G:\102\00279.01\A\Reports Specs\KP\All Reports\Work in Progress\Hydrogeologic Testing Report\Appendices\Appendix B\Appendix B.4-7 CR 32-4c_GW-49.xls 10/16/2008

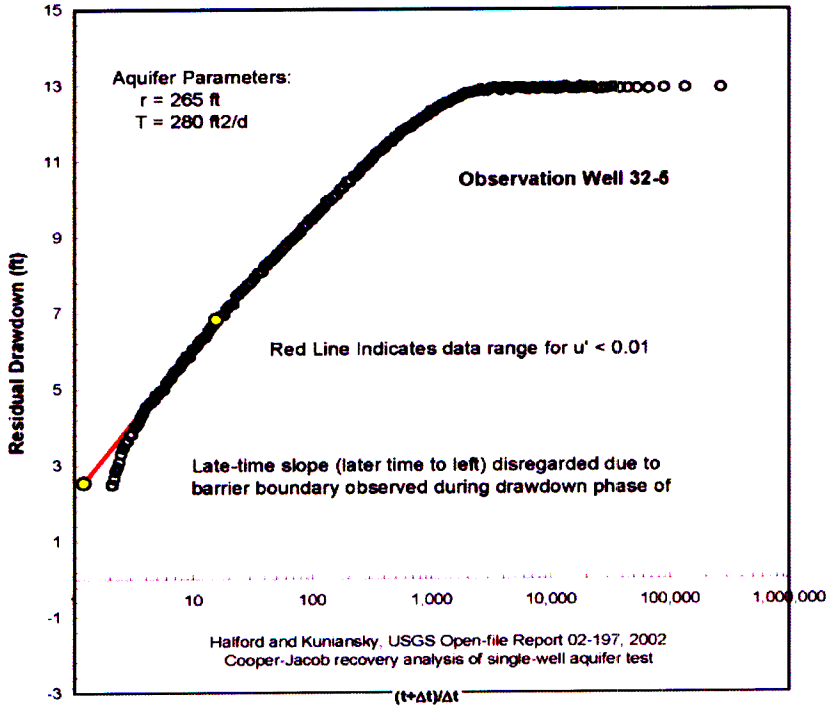

Observation Well 32-9C

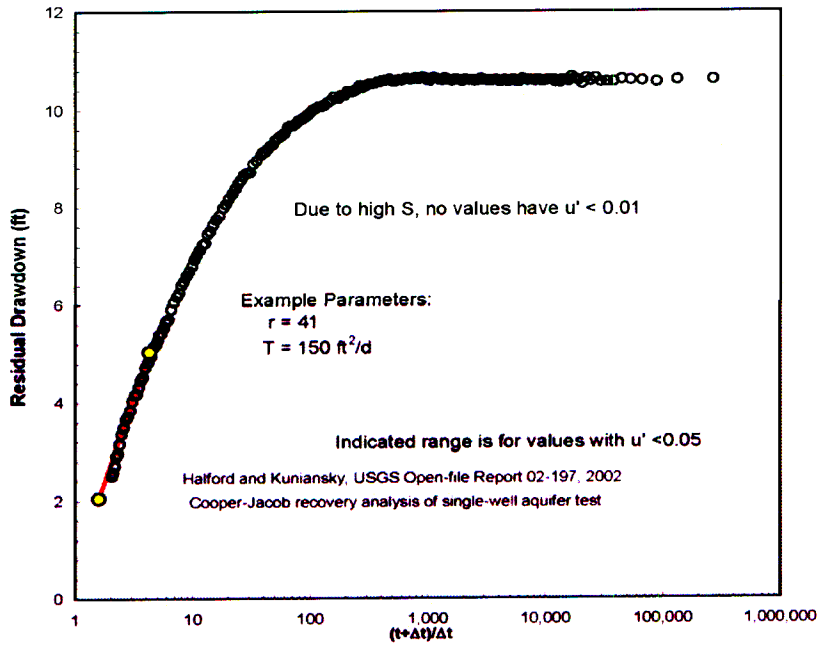

Client	Project	Title	
Knight Piésold CONSULTING	DEWEY-BURDOCK HYDROGEOLOGIC TESTING REPORT	Theis-Cooper-Jacob Recovery Analyses, Dewey Observation Wells 32-5 and 32-9C	
	Project No: DV10200279.01	Date: 10/16/08	Appendix B Figure B.4-8

G:\102\00279.01\A\Reports Specs\KP\All Reports\Work in Progress\Hydrogeologic Testing Report\Appendices\Appendix B\Appendix B.4-8 CR 32-9C_32-5.xls 10/16/2008

Knight Piésold
CONSULTING

Appendix C
Burdock Test Supplemental Information

Appendix C-1: Well Completion Diagrams

Appendix C-2: Time and Water Level Data Values Used in Pumping Test Analysis: Burdock Test, Drawdown Data

Appendix C-3: Time and Water Level Data Values Used in Pumping Test Analysis: Burdock Test, Recover Data

Appendix C-4: Additional Aquifer Parameter Determinations

This page intentionally left blank

Knight Piésold
CONSULTING

Appendix C-1
Well Completion Diagrams

This page intentionally left blank

POWERTECH WELL AND PUMP DATA

Location of Well Burdock, SD	Drilling Contractor Davis Drilling	Driller Tony	Well Name DB07-11-11C
County Fall River	Type of Rig	Drilling Fluid mud	Well Depth 436'
LAT 4811660N	LONG 583455E	Elevation 4163'	Datum point from which all measurements are taken

Screened Monitoring Well Completion Detail

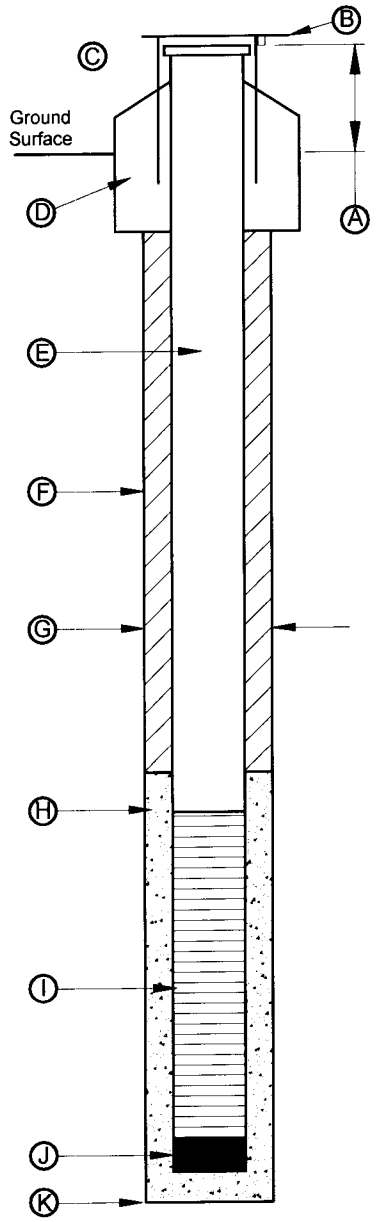

Screened Well No.

A. Stick-up Length 2.0'

B. Key No. NA

C. Protective Casing
- Diameter NA
- Material NA
- Length NA
- Depth to Bottom NA

D. Surface Completion
- Diameter NA
- Depth NA
- Material NA

E. Well Casing Data
- Diameter 6" ID
- Material PVC
- Length 428'
- Weight SCH 40
- Depth to Bottom 426'

F. Grout cement Date 10/30/07
- Depth to Top 0'
- Depth to Bottom 427'
- Material sulfate resis. cement
- Density 15.2b/gal
- Volume 24.1 bbls
- % Excess 50
- Method of Installation displacement
- Depth to Cement in Casing 396'
- Return Constant ☐ Yes ☒ No
- Volume of Grout Return 0

G. Borehole Diameter
- Drilling Dates 6.5" 10/10/07

H. Pack Type/Size NA Date NA
- Depth to Top NA
- Depth to Bottom
- Material
- Method of Installation
- Gradation

I. Screen Date 12/18/08
- Depth to Top 426-436"
- Depth to Bottom
- Manufacturer
- Material PVC
- Slot .01"

J. Bottom Cap
- Material PVC
- Length 1"
- Driller Tony

Boring Depth 495'TD 418' casing'

Additional Information

Method of Drilling Date: 10/10/07

- ☐ Cabel Tool
- ☒ Direct Rotary
- ☐ Bucket Auger
- ☐ Flight Auger
- ☐ Dug
- ☐ Other mud rotary
- ☐ Hollow Rod
- ☐ Air Rotary
- ☐ Reverse Rotary
- ☐ Jetted
- ☐ Driven

Use

- ☐ Domestic
- ☐ Industrial
- ☐ Municipal
- ☐ Test Well
- ☒ Monitoring
- ☐ Other
- ☐ Public Supply
- ☐ Irrigation
- ☐ Commercial
- ☐ Heating or Cooling

One well volume (V) = gallons

Initial Development Water

Water Level (TIC) ____

Well Depth ____

Color ____

Odor

Clarity ____

Developed By ____

Date ____

Well Development Date ____

Description of Development Technique

Pump

Date Installed ____ Type ____

Manufacturer ____ Model No. ____

H.P. ____ Volts ____

Capacity ____

Depth of Pump Intake Setting ____

No. of Stages ____

☐ Oil ☐ Water Lubrication

Power Source ____

Material of drop pipe ____

Bowls ____

Shafting ____ Impellors ____

Bowl Diameter ____

Column Pipe Diameter ____ Length ____

Modification ____

Geophysical Logs Run Gamma, Resistivity, SP, ran 10/10/07

******Mechanical Integrity Test******

PSI Increments		Calibration Date of Gage	
PSI Full Scale			
Test Run By	Stan Davis, Len Eakin	Date Test Run	12/13/08
Time Beginning of Test	0900	Time End of Test	1100
Initial Pressure	35.0PSIG	Initial Fluid Level	5.0 inches
Final Pressure	35.0PSIG	Final Fluid Level	5.0inches

Water Quality

Sample taken? ☐ Yes ☐ No

Where analyzed?

Date well completed 12/18/08

WELL DEVELOPMENT RECORD – PARAMETER MEASUREMENTS

Well No.	Time	Total Volume Withdrawal		pH	Conductivity (ms/cm)	Temp (°C)	Turbidity (NTU)	Comments
		Gallons	Borehole Volume					
11-11c	1400						appears cl.	12/18/08 well developed
	1430							water appeared clear within 5 minutes
								approx. 30 gpm while pumping
								150psi kickoff, 90psi sustained

POWERTECH WELL AND PUMP DATA

Location of Well Burdock, SD	Drilling Contractor Davis Drilling	Driller Tony	Well Name DB07-11-14C
County Fall River	Type of Rig	Drilling Fluid mud	Well Depth 423'
LAT 4811591N	LONG 583496E	Elevation 3645'	

Datum point from which all measurements are taken

Method of Drilling — Date: 11/2/07

- ☐ Cabel Tool
- ☒ Direct Rotary
- ☐ Bucket Auger
- ☐ Flight Auger
- ☐ Dug
- ☐ Other mud rotary
- ☐ Hollow Rod
- ☐ Air Rotary
- ☐ Reverse Rotary
- ☐ Jetted
- ☐ Driven

Use

- ☐ Domestic
- ☐ Industrial
- ☐ Municipal
- ☐ Test Well
- ☒ Monitoring
- ☐ Other
- ☐ Public Supply
- ☐ Irrigation
- ☐ Commercial
- ☐ Heating or Cooling

One well volume (V) = gallons

Initial Development Water

Water Level (TIC) ____

Well Depth ____

Color ____

Odor

Clarity ____

Developed By ____

Date ____

Well Development Date ____

Description of Development Technique ____

Pump

Date Installed ____ Type ____

Manufacturer ____ Model No. ____

H.P. ____ Volts ____

Capacity ____

Depth of Pump Intake Setting ____

No. of Stages ____

☐ Oil ☐ Water Lubrication

Power Source ____

Material of drop pipe ____

Bowls ____

Shafting ____ Impellors ____

Bowl Diameter ____

Column Pipe Diameter ____ Length ____

Modification ____

Geophysical Logs Run Gamma, Resistivity, SP, ran 11/2/07

Water Quality

Sample taken? ☐ Yes ☐ No

Where analyzed? ____

Date well completed 2/13/08

Screened Monitoring Well Completion Detail

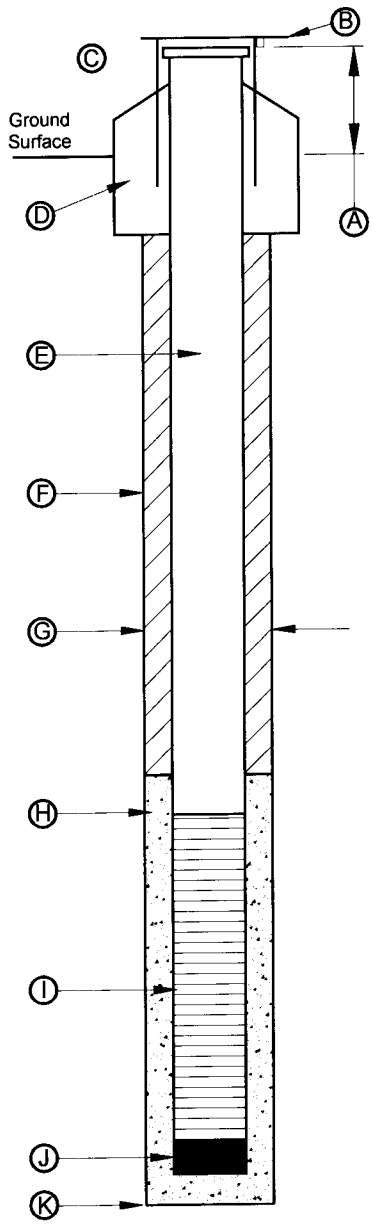

Screened Well No.

A. Stick-up Length 2.0'

B. Key No. NA

C. Protective Casing
- Diameter NA
- Material NA
- Length NA
- Depth to Bottom NA

D. Surface Completion
- Diameter NA
- Depth NA
- Material NA

E. Well Casing Data
- Diameter 4" ID
- Material PVC
- Length 415'
- Weight SCH 40
- Depth to Bottom 413'

F. Grout cement — Date 11/3/07
- Depth to Top 0'
- Depth to Bottom 414'
- Material sulfate resis. cement
- Density 15.2b/gal
- Volume 15.8 bbls
- % Excess 50
- Method of Installation displacement
- Depth to Cement in Casing 303'
- Return Constant ☐ Yes ☒ No
- Volume of Grout Return 0

G. Borehole Diameter
- Drilling Dates 6.25" 11/2/07

H. Pack Type/Size NA — Date NA
- Depth to Top NA
- Depth to Bottom
- Material
- Method of Installation
- Gradation

I. Screen — Date 2/13/08
- Depth to Top 413-423'
- Depth to Bottom
- Manufacturer
- Material PVC
- Slot .01"

J. Bottom Cap
- Material PVC
- Length 1"
- Driller Tony

Boring Depth 460'TD 415' ream'

Additional Information ____

******Mechanical Integrity Test******

PSI Increments		Calibration Date of Gage	
PSI Full Scale			
Test Run By	Stan Davis, Len Eakin	Date Test Run	2/12/08
Time Beginning of Test	1400	Time End of Test	1445
Initial Pressure	40.0PSIG	Initial Fluid Level	5.0 inches
Final Pressure	40.0PSIG	Final Fluid Level	5.0inches

WELL DEVELOPMENT RECORD – PARAMETER MEASUREMENTS

Well No.	Time	Total Volume Withdrawal		pH	Conductivity (ms/cm)	Temp (°C)	Turbidity (NTU)	Comments
		Gallons	Borehole Volume					
11-14c	1500						appears cl.	2/13/08 well developed
	1530							water cleared up in approx. 3 minutes
								approx. 30 gpm while pumping
								150psi kickoff, 100psi sustained

POWERTECH WELL AND PUMP DATA

Location of Well Burdock, SD	Drilling Contractor Davis Drilling	Driller Tony	Well Name DB07-11-15
County Fall River	Type of Rig	Drilling Fluid mud	Well Depth 428'
LAT 4811590N	LONG 583428E	Elevation 3710'	Datum point from which all measurements are taken

Screened Monitoring Well Completion Detail

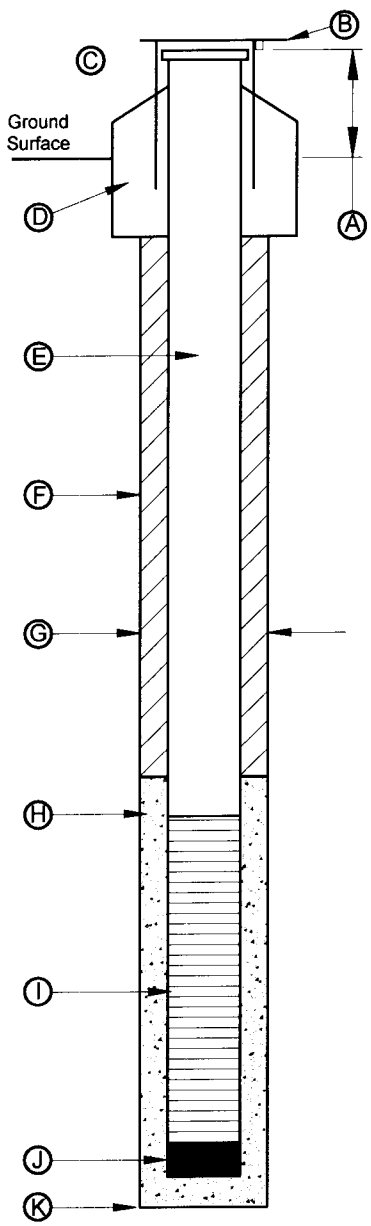

Screened Well No.

A. Stick-up Length 2.0'

B. Key No. NA

C. Protective Casing
- Diameter NA
- Material NA
- Length NA
- Depth to Bottom NA

D. Surface Completion
- Diameter NA
- Depth NA
- Material NA

E. Well Casing Data
- Diameter 4" ID
- Material PVC
- Length 420'
- Weight SCH 40
- Depth to Bottom 418'

F. Grout cement Date 11/5/07
- Depth to Top 0'
- Depth to Bottom 419'
- Material sulfate resis. cement
- Density 15.2b/gal
- Volume 15.7 bbls
- % Excess 50
- Method of Installation displacement
- Depth to Cement in Casing 290'
- Return Constant ☐ Yes ☒ No
- Volume of Grout Return 0

G. Borehole Diameter
- Drilling Dates 6.5" 11/4/07

H. Pack Type/Size NA Date NA
- Depth to Top NA
- Depth to Bottom
- Material
- Method of Installation
- Gradation

I. Screen Date 2/24/08
- Depth to Top 418-428'
- Depth to Bottom
- Manufacturer
- Material PVC
- Slot .01"

J. Bottom Cap
- Material PVC
- Length 1"
- Driller Tony

Boring Depth 495'TD 418' casing'

Additional Information

Method of Drilling Date: 11/4/07

- ☐ Cabel Tool
- ☒ Direct Rotary
- ☐ Bucket Auger
- ☐ Flight Auger
- ☐ Dug
- ☐ Other mud rotary
- ☐ Hollow Rod
- ☐ Air Rotary
- ☐ Reverse Rotary
- ☐ Jetted
- ☐ Driven

Use

- ☐ Domestic
- ☐ Industrial
- ☐ Municipal
- ☐ Test Well
- ☒ Monitoring
- ☐ Other
- ☐ Public Supply
- ☐ Irrigation
- ☐ Commercial
- ☐ Heating or Cooling

One well volume (V) = gallons

Initial Development Water

Water Level (TIC) ____

Well Depth ____

Color ____

Odor

Clarity ____

Developed By ____

Date ____

Well Development Date ____

Description of Development Technique

Pump

Date Installed ____ Type ____

Manufacturer ____ Model No. ____

H.P. ____ Volts ____

Capacity ____

Depth of Pump Intake Setting ____

No. of Stages ____

☐ Oil ☐ Water Lubrication

Power Source ____

Material of drop pipe ____

Bowls ____

Shafting ____ Impellors ____

Bowl Diameter ____

Column Pipe Diameter ____ Length ____

Modification ____

Geophysical Logs Run Gamma, Resistivity, SP, ran 11/4/07

******Mechanical Integrity Test******

PSI Increments		Calibration Date of Gage	
PSI Full Scale			
Test Run By	Stan Davis, Len Eakin	Date Test Run	2/9/08
Time Beginning of Test	0930	Time End of Test	1015
Initial Pressure	40.0PSIG	Initial Fluid Level	5.0 inches
Final Pressure	40.0PSIG	Final Fluid Level	5.0inches

Water Quality

Sample taken? ☐ Yes ☐ No

Where analyzed?

Date well completed 2/24/08

WELL DEVELOPMENT RECORD – PARAMETER MEASUREMENTS

Well No.	Time	Total Volume Withdrawal		pH	Conductivity (ms/cm)	Temp (°C)	Turbidity (NTU)	Comments
		Gallons	Borehole Volume					
11-15	1400						appears cl.	2/12/08 well initially developed
	1430							water appeared clear instantly
								less than 1 gpm while pumping
								100psi kickoff, 50psi sustained
								v. slow recharge, we suspect cement is covering formation. will retrieve screen and shoot with perf. truck to clean off cement
								2/23-2/24/08 came back to well, pulled screen, perforated screen interval, and developed again. made 2-3gpm, but recharged much more quickly

POWERTECH WELL AND PUMP DATA

Location of Well Burdock, SD	Drilling Contractor Davis Drilling	Driller Tony	Well Name DB07-11-2
County Fall River	Type of Rig	Drilling Fluid mud	Well Depth 460'
LAT 4811591N	LONG 583496E	Elevation 3645'	

Screened Monitoring Well Completion Detail

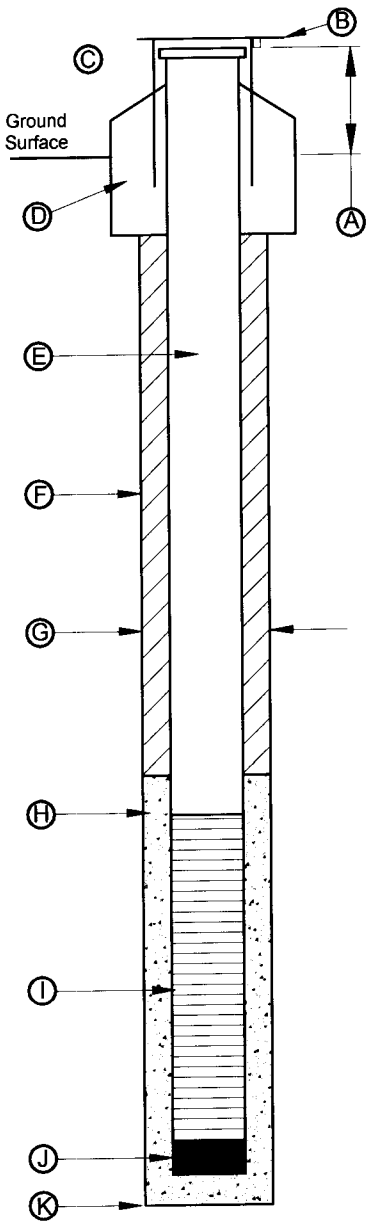

Screened Well No.

A. Stick-up Length 2.0'

B. Key No. NA

C. Protective Casing
- Diameter NA
- Material NA
- Length NA
- Depth to Bottom NA

D. Surface Completion
- Diameter NA
- Depth NA
- Material NA

E. Well Casing Data
- Diameter 4" ID
- Material PVC
- Length 415'
- Weight SCH 40
- Depth to Bottom 450'

F. Grout cement Date 10/21/07
- Depth to Top 0'
- Depth to Bottom 451'
- Material sulfate resis. cement
- Density 15.2b/gal
- Volume 17.0 bbls
- % Excess 50
- Method of Installation displacement
- Depth to Cement in Casing 370'
- Return Constant ☐ Yes ☒ No
- Volume of Grout Return 0

G. Borehole Diameter
- Drilling Dates 6.5" 6/2/07

H. Pack Type/Size NA Date NA
- Depth to Top NA
- Depth to Bottom
- Material
- Method of Installation
- Gradation

I. Screen Date 2/21/08
- Depth to Top 450-460'
- Depth to Bottom
- Manufacturer
- Material PVC
- Slot .01"

J. Bottom Cap
- Material PVC
- Length 1"
- Driller Tony

Boring Depth 575'TD 455' ream'

Additional Information

Datum point from which all measurements are taken

Method of Drilling Date: 6/2/07

- ☐ Cabel Tool
- ☒ Direct Rotary
- ☐ Bucket Auger
- ☐ Flight Auger
- ☐ Dug
- ☐ Other mud rotary
- ☐ Hollow Rod
- ☐ Air Rotary
- ☐ Reverse Rotary
- ☐ Jetted
- ☐ Driven

Use

- ☐ Domestic
- ☐ Industrial
- ☐ Municipal
- ☐ Test Well
- ☒ Monitoring
- ☐ Other
- ☐ Public Supply
- ☐ Irrigation
- ☐ Commercial
- ☐ Heating or Cooling

One well volume (V) = gallons

Initial Development Water

Water Level (TIC)

Well Depth

Color

Odor

Clarity

Developed By

Date

Well Development Date

Description of Development Technique

Pump

Date Installed Type

Manufacturer Model No.

H.P. Volts

Capacity

Depth of Pump Intake Setting

No. of Stages

☐ Oil ☐ Water Lubrication

Power Source

Material of drop pipe

Bowls

Shafting Impellors

Bowl Diameter

Column Pipe Diameter Length

Modification

Geophysical Logs Run Gamma, Resistivity, SP, ran 6/2/07

******Mechanical Integrity Test******

PSI Increments		Calibration Date of Gage	
PSI Full Scale			
Test Run By	Stan Davis, Len Eakin	Date Test Run	2/20/08
Time Beginning of Test	1100	Time End of Test	1200
Initial Pressure	40.0PSIG	Initial Fluid Level	5.0 inches
Final Pressure	40.0PSIG	Final Fluid Level	5.0inches

Water Quality

Sample taken? ☐ Yes ☐ No

Where analyzed?

Date well completed 2/21/08

WELL DEVELOPMENT RECORD – PARAMETER MEASUREMENTS

Well No.	Time	Total Volume Withdrawal		pH	Conductivity (ms/cm)	Temp (°C)	Turbidity (NTU)	Comments
		Gallons	Borehole Volume					
11-2	1300						appears cl.	2/21/08 well developed
	1330							water cleared up in approx. 10 minutes
								approx. 25-30 gpm while pumping
								175psi kickoff, 90psi sustained
								we lifted well for 10 minutes before pushing screen to make sure that the formation was not blocked off by cement. appeared to be making good water, so we pushed screened then lifted for another 30 minutes.

POWERTECH WELL AND PUMP DATA

Location of Well Dewey, SD	Drilling Contractor Davis Drilling	Driller Tony	Well Name DB08-11-17
County Fall River	Type of Rig Speed Star 1500	Drilling Fluid Mud	Well Depth 255'
LAT 4811660N	LONG 583440E	Elevation ?'	Datum point from which all measurements are taken

Screened Monitoring Well Completion Detail

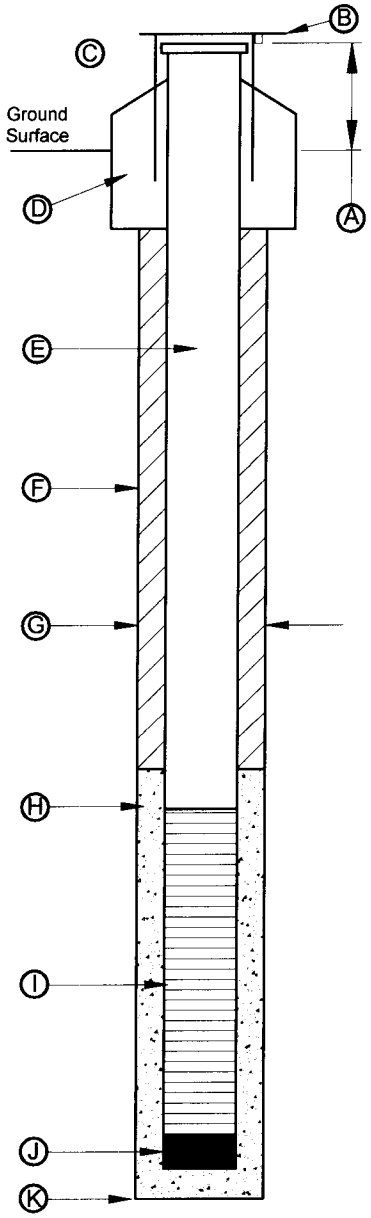

Screened Well No.

A. Stick-up Length 2.0'

B. Key No. NA

C. Protective Casing
- Diameter NA
- Material NA
- Length NA
- Depth to Bottom NA

D. Surface Completion
- Diameter NA
- Depth NA
- Material NA

E. Well Casing Data
- Diameter 6" ID
- Material PVC
- Length 247'
- Weight SDR17
- Depth to Bottom 245'

F. Grout Cement Date 03/26/08
- Depth to Top 0'
- Depth to Bottom 247'
- Material Type V "LA" Cement
- Density 15.2 lb/gal
- Volume 10.05 bbls
- % Excess 10
- Method of Installation Displacement
- Depth to Cement in Casing ?'
- Return Constant ☒ Yes ☐ No
- Volume of Grout Return 2.5 bbls

G. Borehole Diameter
- Drilling Dates 8.75" 03/26/08

H. Pack Type/Size NA Date NA
- Depth to Top NA
- Depth to Bottom
- Material
- Method of Installation
- Gradation

I. Screen Date 04/01/08
- Depth to Top 245-255'
- Depth to Bottom
- Manufacturer
- Material PVC
- Slot .01"

J. Bottom Cap
- Material PVC
- Length 1"
- Driller Tommy

Boring Depth 257'

Additional Information

Method of Drilling Date: 03/25/08
- ☐ Cabel Tool
- ☐ Hollow Rod
- ☐ Direct Rotary
- ☐ Air Rotary
- ☐ Bucket Auger
- ☐ Reverse Rotary
- ☐ Flight Auger
- ☐ Jetted
- ☐ Dug
- ☐ Driven
- ☒ Other Mud Rotary

Use
- ☐ Domestic
- ☐ Public Supply
- ☐ Industrial
- ☐ Irrigation
- ☐ Municipal
- ☐ Commercial
- ☐ Test Well
- ☐ Heating or Cooling
- ☒ Monitoring
- ☐ Other

One well volume (V) = gallons

Initial Development Water

Water Level (TIC) 38.08 ft below ground surface

Well Depth

Color

Odor

Clarity

Developed By

Date

Well Development Date

Description of Development Technique

Pump

Date Installed Type

Manufacturer Model No.

H.P. Volts

Capacity

Depth of Pump Intake Setting

No. of Stages

☐ Oil ☐ Water Lubrication

Power Source

Material of drop pipe

Bowls

Shafting Impellors

Bowl Diameter

Column Pipe Diameter Length

Modification

Geophysical Logs Run Gamma, Resistivity, SP

******Mechanical Integrity Test******

PSI Increments		Calibration Date of Gage	
PSI Full Scale			
Test Run By	Stan Davis, Dan Tschopp	Date Test Run	04/01/08
Time Beginning of Test	0830	Time End of Test	0930
Initial Pressure	35.0 PSIG	Initial Fluid Level	4 inches
Final Pressure	35.0 PSIG	Final Fluid Level	4inches

Water Quality

Sample taken? ☐ Yes ☐ No

Where analyzed?

Date well completed 04/01/08

WELL DEVELOPMENT RECORD – PARAMETER MEASUREMENTS

Well No.	Time	Total Volume Withdrawal		pH	Conductivity (ms/cm)	Temp (°C)	Turbidity (NTU)	Comments
		Gallons	Borehole Volume					
								Well developed: 04/01/08
								Water cleared up within 5 minutes
								Unload Pressure: 110psi
								Steady Lift Pressure: 10psi
								20 minute Recovery Pressure: 15psi
								Output: Approximately 1.5 gpm
								Screened Interval: Fall River SS Formation

POWERTECH WELL AND PUMP DATA

Location of Well Dewey, SD	Drilling Contractor Davis Drilling	Driller Tony	Well Name DB08-11-18
County Fall River	Type of Rig Speed Star 1500	Drilling Fluid Mud	Well Depth 631'
LAT 583471N	LONG 4811660E	Elevation 3791'	Datum point from which all measurements are taken

Screened Monitoring Well Completion Detail

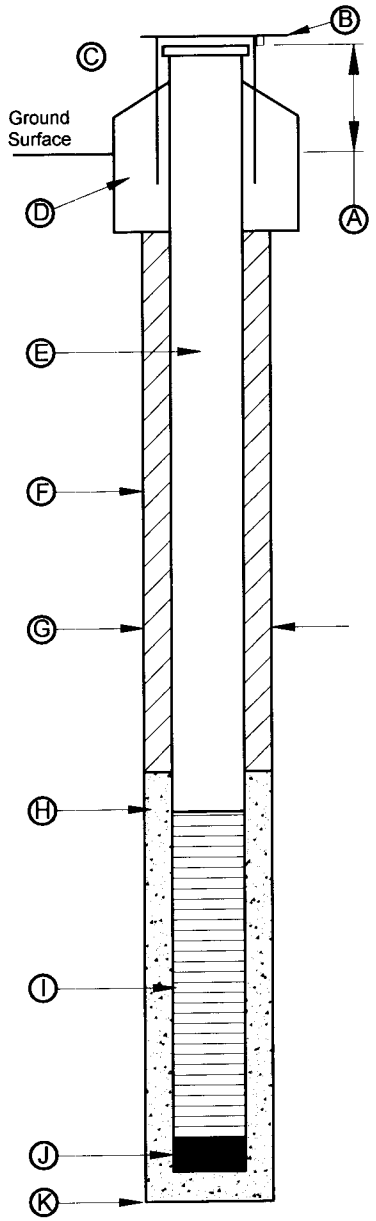

Screened Well No.

A. Stick-up Length 2.0'
B. Key No. NA
C. Protective Casing
- Diameter NA
- Material NA
- Length NA
- Depth to Bottom NA

D. Surface Completion
- Diameter NA
- Depth NA
- Material NA

E. Well Casing Data
- Diameter 6" ID
- Material Steel
- Length 623'
- Weight Schedule 40
- Depth to Bottom 621'

F. Grout Cement Date 04/02/08
- Depth to Top 0'
- Depth to Bottom 623'
- Material Type V "LA" Cement
- Density 15.15 lb/gal
- Volume 23.14 bbls
- % Excess 10
- Method of Installation Displacement
- Depth to Cement in Casing 490'
- Return Constant ☒ Yes ☐ No
- Volume of Grout Return 1 bbls

G. Borehole Diameter
- Drilling Dates 8.75" 03/31/08

H. Pack Type/Size NA Date NA
- Depth to Top NA
- Depth to Bottom
- Material
- Method of Installation
- Gradation

I. Screen Date 04/15/08
- Depth to Top 621 to 631'
- Depth to Bottom
- Manufacturer
- Material PVC
- Slot .01"

J. Bottom Cap
- Material PVC
- Length 1"
- Driller Tommy

Boring Depth 633'

Additional Information

Method of Drilling — Date: 04/01/08
- ☐ Cabel Tool
- ☐ Hollow Rod
- ☐ Direct Rotary
- ☐ Air Rotary
- ☐ Bucket Auger
- ☐ Reverse Rotary
- ☐ Flight Auger
- ☐ Jetted
- ☐ Dug
- ☐ Driven
- ☒ Other Mud Rotary

Use
- ☐ Domestic
- ☐ Public Supply
- ☐ Industrial
- ☐ Irrigation
- ☐ Municipal
- ☐ Commercial
- ☐ Test Well
- ☐ Heating or Cooling
- ☒ Monitoring
- ☐ Other

One well volume (V) = gallons

Initial Development Water
- Water Level (TIC)
- Well Depth
- Color
- Odor
- Clarity
- Developed By
- Date
- Well Development Date
- Description of Development Technique

Pump
- Date Installed
- Type
- Manufacturer
- Model No.
- H.P.
- Volts
- Capacity
- Depth of Pump Intake Setting
- No. of Stages
- ☐ Oil ☐ Water Lubrication
- Power Source
- Material of drop pipe
- Bowls
- Shafting
- Impellors
- Bowl Diameter
- Column Pipe Diameter
- Length
- Modification

Geophysical Logs Run Gamma, Resistivity, SP

******Mechanical Integrity Test******

PSI Increments	5	Calibration Date of Gage	
PSI Full Scale			
Test Run By	Stan Davis, Dan Tschopp	Date Test Run	04/14/08
Time Beginning of Test	1200	Time End of Test	1300
Initial Pressure	35.0 PSIG	Initial Fluid Level	4 inches
Final Pressure	35.0 PSIG	Final Fluid Level	4inches

Water Quality
- Sample taken? ☐ Yes ☐ No
- Where analyzed?

Date well completed 04/15/08

WELL DEVELOPMENT RECORD – PARAMETER MEASUREMENTS

Well No.	Time	Total Volume Withdrawal		pH	Conductivity (ms/cm)	Temp (°C)	Turbidity (NTU)	Comments
		Gallons	Borehole Volume					
								Well developed: 04/15/08
								Water cleared up within 5 minutes
								Unload Pressure: 245psi
								Steady Lift Pressure: 30psi
								Output: Approximately <2 gpm
								Screened Interval: Unkpapa SS formation
								20 min recovery lift: 50 psi

POWERTECH WELL AND PUMP DATA

Location of Well Dewey, SD	Drilling Contractor Davis Drilling	Driller Tony	Well Name DB08-11-19
County Fall River	Type of Rig Speed Star 1500	Drilling Fluid Mud	Well Depth 335'
LAT 583453N	LONG 4811673E	Elevation 4029'	Datum point from which all measurements are taken

Screened Monitoring Well Completion Detail

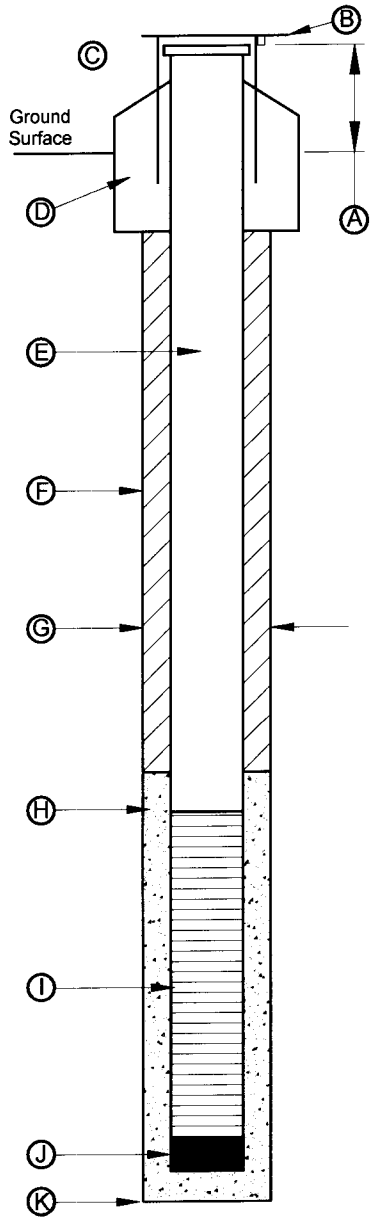

Screened Well No.

A. Stick-up Length 2.0'
B. Key No. NA
C. Protective Casing
Diameter NA
Material NA
Length NA
Depth to Bottom NA
D. Surface Completion
Diameter NA
Depth NA
Material NA
E. Well Casing Data
Diameter 6" ID
Material PVC
Length 327'
Weight SDR17
Depth to Bottom 325'
F. Grout Cement Date 04/4/08
Depth to Top 0'
Depth to Bottom 327'
Material Type V "LA" Cement
Density 15.65 lb/gal
Volume 12.77 bbls
% Excess 10
Method of Installation Displacement
Depth to Cement in Casing 223'
Return Constant ☒ Yes ☐ No
Volume of Grout Return 2 bbls
G. Borehole Diameter
Drilling Dates 8.75" 04/3/08
H. Pack Type/Size NA Date NA
Depth to Top NA
Depth to Bottom
Material
Method of Installation
Gradation
I. Screen Date 04/16/08
Depth to Top 325 to335'
Depth to Bottom
Manufacturer
Material PVC
Slot .01"
J. Bottom Cap
Material PVC
Length 1"
Driller Tommy
Boring Depth 337'

Additional Information

Method of Drilling Date: 04/3/08
☐ Cabel Tool ☐ Hollow Rod
☐ Direct Rotary ☐ Air Rotary
☐ Bucket Auger ☐ Reverse Rotary
☐ Flight Auger ☐ Jetted
☐ Dug ☐ Driven
☒ Other Mud Rotary

Use
☐ Domestic ☐ Public Supply
☐ Industrial ☐ Irrigation
☐ Municipal ☐ Commercial
☐ Test Well ☐ Heating or Cooling
☒ Monitoring
☐ Other

One well volume (V) = gallons
Initial Development Water
Water Level (TIC)
Well Depth
Color
Odor
Clarity
Developed By
Date
Well Development Date
Description of Development Technique

Pump
Date Installed Type
Manufacturer Model No.
H.P. Volts
Capacity
Depth of Pump Intake Setting
No. of Stages
☐ Oil ☐ Water Lubrication
Power Source
Material of drop pipe
Bowls
Shafting Impellors
Bowl Diameter
Column Pipe Diameter Length
Modification

Geophysical Logs Run Gamma, Resistivity, SP

******Mechanical Integrity Test******

PSI Increments	5	Calibration Date of Gage	
PSI Full Scale			
Test Run By	Stan Davis, Dan Tschopp	Date Test Run	04/15/08
Time Beginning of Test	0830	Time End of Test	0930
Initial Pressure	35.0 PSIG	Initial Fluid Level	4 inches
Final Pressure	35.0 PSIG	Final Fluid Level	4inches

Water Quality
Sample taken? ☐ Yes ☐ No
Where analyzed?

Date well completed 04/16/08

WELL DEVELOPMENT RECORD – PARAMETER MEASUREMENTS

Well No.	Time	Total Volume Withdrawal		pH	Conductivity (ms/cm)	Temp (°C)	Turbidity (NTU)	Comments
		Gallons	Borehole Volume					
								Well developed: 04/16/08
								Water cleared up within 5 minutes
								Unload Pressure: 150 psi
								Steady Lift Pressure: 45 psi
								Output: Approximately 30 gpm
								Screened Interval: Lakota SS formation

Knight Piésold
CONSULTING

Appendix C-2
Time and Water Level Data Values Used in Pumping Test Analysis: Burdock Test, Drawdown Data

This page intentionally left blank

Table C.2-1:
Time and Water Level Data Values Used in Pumping Test Analysis: Burdock Test, Drawdown Data

11-2		3664.8	**11-14C**		3660.9	**11-15**		3660.2	**11-19***		3662.1	**11-11C****		3662
Time (days)	Drawdown (ft)	Elevation (ft)	Time (days)	Drawdown (ft)	Elevation (ft)	Time (days)	Drawdown (f	Elevation (ft)	Time (days)	Drawdown (ft)	Elevation (ft)	Time (days)	Drawdown (ft)	Elevation (ft)
0.000012	-0.024157	3664.8	0.000012	-0.009060	3660.9	0.000012	0.000000	3660.2	0.000012	0.047297	3662.1	0.000025	1.516154	3660
0.000023	-0.047234	3664.8	0.000023	0.018633	3660.9	0.000023	-0.023077	3660.2	0.000058	0.072682	3662.0	0.000035	1.781538	3660
0.000035	-0.038003	3664.8	0.000035	0.002479	3660.9	0.000035	-0.025385	3660.2	0.000069	0.042682	3662.1	0.000046	2.453077	3660
0.000046	0.081997	3664.7	0.000046	0.002479	3660.9	0.000046	0.030000	3660.2	0.000093	0.010374	3662.1	0.000058	2.967692	3659
0.000058	0.033535	3664.8	0.000058	-0.078290	3661.0	0.000058	-0.013846	3660.2	0.000116	0.042682	3662.1	0.000069	3.648462	3658
0.000069	0.021997	3664.8	0.000069	-0.015983	3660.9	0.000069	0.009231	3660.2	0.000162	0.031143	3662.1	0.000083	4.463077	3658
0.000081	0.070458	3664.7	0.000081	0.060171	3660.8	0.000081	-0.053077	3660.3	0.000174	0.054220	3662.0	0.000093	5.010000	3657
0.000093	-0.028772	3664.8	0.000093	0.007094	3660.9	0.000093	-0.009231	3660.2	0.000185	0.031143	3662.1	0.000104	5.016923	3657
0.000104	-0.051849	3664.9	0.000104	0.011710	3660.9	0.000104	-0.018462	3660.2	0.000197	0.010374	3662.1	0.000116	5.480769	3657
0.000116	-0.040311	3664.8	0.000116	-0.027521	3660.9	0.000116	0.011538	3660.2	0.000208	0.047297	3662.1	0.000127	5.746154	3656
0.000127	-0.061080	3664.9	0.000127	-0.015983	3660.9	0.000127	-0.032308	3660.2	0.000220	0.031143	3662.1	0.000141	5.981538	3656
0.000139	-0.021849	3664.8	0.000139	-0.004444	3660.9	0.000139	0.129231	3660.1	0.000255	0.017297	3662.1	0.000150	6.256154	3656
0.000150	0.072766	3664.7	0.000150	0.016325	3660.9	0.000150	0.025385	3660.2	0.000289	0.010374	3662.1	0.000162	6.306923	3656
0.000162	-0.058772	3664.9	0.000162	0.011710	3660.9	0.000162	0.009231	3660.2	0.000370	0.042682	3662.1	0.000174	6.773077	3655
0.000174	-0.040311	3664.8	0.000174	0.002479	3660.9	0.000174	-0.011538	3660.2	0.000498	0.051912	3662.0	0.000185	6.969231	3655
0.000185	-0.044926	3664.8	0.000185	-0.013675	3660.9	0.000185	0.002308	3660.2	0.000521	0.003451	3662.1	0.000199	7.061539	3655
0.000197	-0.031080	3664.8	0.000197	-0.022906	3660.9	0.000197	0.018462	3660.2	0.000833	0.056528	3662.0	0.000208	7.377692	3655
0.000208	-0.021849	3664.8	0.000208	-0.032137	3660.9	0.000208	0.101538	3660.1	0.001111	0.051912	3662.0	0.000220	7.467692	3655
0.000220	-0.061080	3664.9	0.000220	-0.034444	3660.9	0.000220	-0.006923	3660.2	0.001319	0.012682	3662.1	0.000231	7.873846	3654
0.000231	-0.012619	3664.8	0.000231	0.023248	3660.9	0.000231	0.013846	3660.2	0.002639	0.054220	3662.0	0.000243	8.206154	3654
0.000243	-0.008003	3664.8	0.000243	0.016325	3660.9	0.000243	-0.027692	3660.2	0.004167	0.001143	3662.1	0.000257	9.445385	3653
0.000255	0.045074	3664.8	0.000255	-0.002137	3660.9	0.000255	-0.020769	3660.2	0.005903	0.033451	3662.1	0.000266	9.078462	3653
0.000266	-0.019542	3664.8	0.000266	0.030171	3660.9	0.000266	-0.004615	3660.2	0.007292	0.070374	3662.0	0.000278	9.729231	3652
0.000278	0.040458	3664.8	0.000278	0.009402	3660.9	0.000278	0.018462	3660.2	0.008333	0.008066	3662.1	0.000289	9.835384	3652
0.000289	0.001228	3664.8	0.000289	-0.020598	3660.9	0.000289	0.023077	3660.2	0.009028	0.024220	3662.1	0.000301	10.308461	3652
0.000301	0.063535	3664.7	0.000301	-0.039060	3660.9	0.000301	-0.009231	3660.2	0.020833	0.003451	3662.1	0.000312	10.712308	3651
0.000312	0.045074	3664.8	0.000312	-0.006752	3660.9	0.000312	-0.018462	3660.2	0.025000	0.019605	3662.1	0.000324	11.180769	3651
0.000324	-0.065696	3664.9	0.000324	0.000171	3660.9	0.000324	0.006923	3660.2	0.072917	0.077297	3662.0	0.000336	11.457692	3651
0.000336	0.081997	3664.7	0.000336	0.004786	3660.9	0.000336	-0.027692	3660.2	0.079896	0.005759	3662.1	0.000347	11.833846	3650
0.000347	0.070458	3664.7	0.000347	0.032479	3660.9	0.000347	-0.004615	3660.2	0.083368	0.003451	3662.1	0.000359	12.263077	3650
0.000359	0.091228	3664.7	0.000359	-0.009060	3660.9	0.000359	0.011538	3660.2	0.090313	0.028836	3662.1	0.000370	11.210770	3651
0.000370	0.058920	3664.7	0.000370	-0.029829	3660.9	0.000370	-0.002308	3660.2	0.097257	0.038066	3662.1	0.000382	11.289230	3651
0.000382	0.056612	3664.7	0.000382	0.018633	3660.9	0.000382	-0.020769	3660.2	0.104201	0.081912	3662.0	0.000394	12.422308	3650
0.000394	0.077381	3664.7	0.000394	-0.006752	3660.9	0.000394	0.013846	3660.2	0.111146	0.088836	3662.0	0.000405	12.669230	3649
0.000417	-0.070311	3664.9	0.000405	0.002479	3660.9	0.000417	0.011538	3660.2	0.118206	0.128066	3662.0	0.000417	12.837692	3649
0.000451	-0.061080	3664.9	0.000417	0.004786	3660.9	0.000451	-0.011538	3660.2	0.125035	0.155759	3661.9	0.000428	12.692307	3649
0.000463	-0.008003	3664.8	0.000451	0.002479	3660.9	0.000463	0.090000	3660.1	0.131979	0.155759	3661.9	0.000451	13.112308	3649
0.000486	-0.019542	3664.8	0.000463	0.009402	3660.9	0.000486	-0.018462	3660.2	0.138924	0.160374	3661.9	0.000463	13.324615	3649
0.000498	0.072766	3664.7	0.000486	-0.027521	3660.9	0.000498	0.000000	3660.2	0.149340	0.174220	3661.9	0.000486	13.633846	3648
0.000521	0.008151	3664.8	0.000498	-0.043675	3660.9	0.000521	0.000000	3660.2	0.159757	0.204220	3661.9	0.000498	13.970769	3648
0.000532	0.061228	3664.7	0.000521	-0.039060	3660.9	0.000532	0.006923	3660.2	0.170174	0.208836	3661.9	0.000521	14.370000	3648
0.000556	0.079689	3664.7	0.000532	-0.006752	3660.9	0.000556	0.009231	3660.2	0.180590	0.238836	3661.9	0.000532	15.939231	3646
0.000590	0.035843	3664.8	0.000556	0.014017	3660.9	0.000590	0.013846	3660.2	0.194479	0.275759	3661.8	0.000556	15.150000	3647
0.000625	-0.047234	3664.8	0.000590	0.011710	3660.9	0.000625	0.000000	3660.2	0.208368	0.326528	3661.8	0.000590	16.077692	3646
0.000660	0.045074	3664.8	0.000625	0.050940	3660.8	0.000660	-0.025385	3660.2	0.222257	0.342682	3661.8	0.000625	17.023846	3645
0.000694	-0.049542	3664.8	0.000660	0.055556	3660.8	0.000694	-0.009231	3660.2	0.236146	0.368066	3661.7	0.000660	17.820000	3644
0.000729	0.088920	3664.7	0.000694	-0.009060	3660.9	0.000729	0.016154	3660.2	0.250035	0.398066	3661.7	0.000694	18.664616	3643
0.000764	-0.040311	3664.8	0.000729	-0.004444	3660.9	0.000764	-0.027692	3660.2	0.263924	0.478836	3661.6	0.000729	19.426153	3643
0.000799	0.091228	3664.7	0.000764	0.018633	3660.9	0.000799	0.126923	3660.1	0.277812	0.485759	3661.6	0.000764	20.319231	3642

Table C.2-1:
Time and Water Level Data Values Used in Pumping Test Analysis: Burdock Test, Drawdown Data

11-2		3664.8	**11-14C**		3660.9	**11-15**		3660.2	**11-19***		3662.1	**11-11C****		3662
Time (days)	Drawdown (ft)	Elevation (ft)	Time (days)	Drawdown (ft)	Elevation (ft)	Time (days)	Drawdown (f	Elevation (ft)	Time (days)	Drawdown (ft)	Elevation (ft)	Time (days)	Drawdown (ft)	Elevation (ft)
0.000833	-0.047234	3664.8	0.000799	0.014017	3660.9	0.000833	0.122308	3660.1	0.295174	0.548066	3661.6	0.000799	20.972307	3641
0.000903	0.049689	3664.8	0.000833	0.041710	3660.9	0.000903	0.018462	3660.2	0.312535	0.548066	3661.6	0.000833	21.867693	3640
0.000972	-0.012619	3664.8	0.000903	-0.004444	3660.9	0.000972	0.053077	3660.1	0.329896	0.617297	3661.5	0.000903	23.321539	3639
0.001042	-0.035696	3664.8	0.000972	-0.015983	3660.9	0.001042	0.002308	3660.2	0.347257	0.642682	3661.5	0.000972	24.676153	3637
0.001111	-0.038003	3664.8	0.001042	-0.004444	3660.9	0.001111	-0.020769	3660.2	0.370405	0.753451	3661.3	0.001042	25.989231	3636
0.001181	-0.044926	3664.8	0.001111	0.004786	3660.9	0.001181	0.000000	3660.2	0.393553	0.801912	3661.3	0.001111	27.496155	3635
0.001250	-0.038003	3664.8	0.001181	0.011710	3660.9	0.001250	0.032308	3660.2	0.416701	0.799605	3661.3	0.001181	28.686924	3633
0.001319	-0.077234	3664.9	0.001250	0.023248	3660.9	0.001319	-0.041538	3660.2	0.439965	0.824989	3661.3	0.001250	30.036922	3632
0.001389	-0.019542	3664.8	0.001319	0.018633	3660.9	0.001389	-0.032308	3660.2	0.462998	0.912682	3661.2	0.001319	31.310770	3631
0.001493	-0.058772	3664.9	0.001389	0.034786	3660.9	0.001493	0.002308	3660.2	0.486146	0.947297	3661.2	0.001389	32.589230	3629
0.001597	-0.021849	3664.8	0.001493	-0.002137	3660.9	0.001597	-0.046154	3660.2	0.520868	1.004989	3661.1	0.001493	34.361538	3628
0.001701	-0.061080	3664.9	0.001597	0.027863	3660.9	0.001701	0.023077	3660.2	0.555590	1.060374	3661.0	0.001597	36.092308	3626
0.001806	-0.012619	3664.8	0.001701	0.050940	3660.8	0.001806	0.013846	3660.2	0.590312	1.099605	3661.0	0.001701	37.631538	3624
0.001944	-0.044926	3664.8	0.001806	0.037094	3660.9	0.001944	0.006923	3660.2	0.625035	1.233451	3660.9	0.001806	39.083076	3623
0.002083	-0.019542	3664.8	0.001944	0.018633	3660.9	0.002083	-0.020769	3660.2	0.659757	1.270374	3660.8	0.001944	41.026154	3621
0.002222	-0.077234	3664.9	0.002083	0.044017	3660.9	0.002222	0.018462	3660.2	0.694479	1.332682	3660.8	0.002083	42.489231	3620
0.002361	-0.001080	3664.8	0.002222	0.037094	3660.9	0.002361	-0.002308	3660.2	0.729549	1.408836	3660.7	0.002222	44.259232	3618
0.002500	-0.044926	3664.8	0.002361	0.023248	3660.9	0.002500	0.006923	3660.2	0.763924	1.466528	3660.6	0.002361	45.662308	3616
0.002639	-0.056465	3664.9	0.002500	0.101710	3660.8	0.002639	-0.046154	3660.2	0.798646	1.535759	3660.6	0.002500	47.166924	3615
0.002778	-0.038003	3664.8	0.002639	0.108633	3660.8	0.002778	-0.006923	3660.2	0.833368	1.604989	3660.5	0.002639	48.606922	3613
0.002951	-0.038003	3664.8	0.002778	0.057863	3660.8	0.002951	-0.016154	3660.2	0.902928	1.736528	3660.4	0.002778	49.860001	3612
0.003125	-0.019542	3664.8	0.002951	0.129402	3660.8	0.003125	-0.023077	3660.2	0.972951	1.794220	3660.3	0.002951	51.387692	3611
0.003299	-0.068003	3664.9	0.003125	0.090171	3660.8	0.003299	-0.011538	3660.2	1.041701	1.907297	3660.2	0.003125	52.799999	3609
0.003472	-0.084157	3664.9	0.003299	0.092479	3660.8	0.003472	0.041538	3660.2	1.111146	1.960374	3660.1	0.003299	54.080769	3608
0.003704	-0.040311	3664.8	0.003472	0.108633	3660.8	0.003704	0.027692	3660.2	1.180590	2.094220	3660.0	0.003472	55.310768	3607
0.003935	-0.051849	3664.9	0.003704	0.129402	3660.8	0.003935	-0.011538	3660.2	1.250035	2.101143	3660.0	0.003704	56.683846	3605
0.004167	-0.038003	3664.8	0.003935	0.150171	3660.7	0.004167	0.016154	3660.2	1.319479	2.193451	3659.9	0.003935	57.895386	3604
0.004398	-0.063388	3664.9	0.004167	0.164017	3660.7	0.004398	0.013846	3660.2	1.388924	2.311143	3659.8	0.004167	59.180771	3603
0.004630	-0.058772	3664.9	0.004398	0.196325	3660.7	0.004630	0.006923	3660.2	1.493090	2.396528	3659.7	0.004398	60.244614	3602
0.004861	-0.021849	3664.8	0.004630	0.228633	3660.7	0.004861	-0.053077	3660.3	1.597257	2.504989	3659.6	0.004630	61.167694	3601
0.005208	-0.035696	3664.8	0.004861	0.247094	3660.7	0.005208	-0.023077	3660.2	1.701424	2.620374	3659.5	0.004861	61.975384	3600
0.005556	-0.086465	3664.9	0.005208	0.295556	3660.6	0.005556	-0.036923	3660.2	1.805590	2.756528	3659.3	0.005208	63.325386	3599
0.005903	-0.026465	3664.8	0.005556	0.330171	3660.6	0.005903	-0.011538	3660.2	1.944479	2.848835	3659.3	0.005556	64.400772	3598
0.006250	-0.028772	3664.8	0.005903	0.374017	3660.5	0.006250	0.025385	3660.2	2.083368	2.890374	3659.2	0.005903	65.418465	3597
0.006597	-0.058772	3664.9	0.006250	0.429402	3660.5	0.006597	0.041538	3660.2	2.222257	2.915759	3659.2	0.006250	66.311539	3596
0.006944	-0.063388	3664.9	0.006597	0.498633	3660.4	0.006944	-0.016154	3660.2	2.361146	2.984989	3659.1	0.006597	67.100769	3595
0.007292	-0.051849	3664.9	0.006944	0.560940	3660.3	0.007292	0.011538	3660.2	2.500035	3.086528	3659.0	0.006944	67.728462	3594
0.007639	-0.070311	3664.9	0.007292	0.620940	3660.3	0.007639	-0.023077	3660.2	2.638924	3.148836	3659.0	0.007292	68.552307	3593
0.007986	-0.086465	3664.9	0.007639	0.653248	3660.2	0.007986	0.000000	3660.2	2.777813	3.222682	3658.9	0.007639	69.124619	3593
0.008333	-0.088772	3664.9	0.007986	0.678633	3660.2	0.008333	0.009231	3660.2	2.951423	3.358835	3658.7	0.007986	69.708458	3592
0.009028	-0.024157	3664.8	0.008333	0.745556	3660.2	0.009028	-0.002308	3660.2	2.999988	3.358835	3658.7	0.008333	70.416924	3592
0.009722	-0.021849	3664.8	0.009028	0.881710	3660.0	0.009722	-0.009231	3660.2				0.009028	71.642311	3590
0.010417	-0.033388	3664.8	0.009722	0.950940	3659.9	0.010417	0.002308	3660.2				0.009722	72.440773	3590
0.011111	0.075074	3664.7	0.010417	1.103248	3659.8	0.011111	-0.016154	3660.2				0.010417	73.167694	3589
0.011806	-0.065696	3664.9	0.011111	1.193248	3659.7	0.011806	-0.004615	3660.2				0.011111	73.636154	3588
0.012500	-0.044926	3664.8	0.011806	1.287863	3659.6	0.012500	0.025385	3660.2				0.011806	74.150772	3588
0.013194	-0.056465	3664.9	0.012500	1.424017	3659.5	0.013194	0.011538	3660.2				0.012500	74.545387	3587
0.013889	-0.031080	3664.8	0.013194	1.504786	3659.4	0.013889	-0.046154	3660.2				0.013194	74.815384	3587
0.014931	0.065843	3664.7	0.013889	1.703248	3659.2	0.014931	-0.002308	3660.2				0.013889	74.995384	3587

Table C.2-1:
Time and Water Level Data Values Used in Pumping Test Analysis: Burdock Test, Drawdown Data

11-2		3664.8	**11-14C**		3660.9	**11-15**		3660.2	**11-19***		3662.1	**11-11C****		3662
Time (days)	Drawdown (ft)	Elevation (ft)	Time (days)	Drawdown (ft)	Elevation (ft)	Time (days)	Drawdown (f	Elevation (ft)	Time (days)	Drawdown (ft)	Elevation (ft)	Time (days)	Drawdown (ft)	Elevation (ft)
0.015972	-0.047234	3664.8	0.014931	1.770171	3659.1	0.015972	-0.023077	3660.2				0.014931	75.251541	3587
0.017014	-0.084157	3664.9	0.015972	1.934017	3659.0	0.017014	-0.011538	3660.2				0.015972	75.565384	3586
0.018056	-0.061080	3664.9	0.017014	2.047094	3658.9	0.018056	0.000000	3660.2				0.017014	75.904617	3586
0.019444	0.008151	3664.8	0.018056	2.213248	3658.7	0.019444	0.011538	3660.2				0.018056	76.105385	3586
0.020833	-0.061080	3664.9	0.019444	2.377094	3658.5	0.020833	0.057692	3660.1				0.019444	76.299232	3586
0.022222	-0.049542	3664.8	0.020833	2.550171	3658.3	0.022222	-0.018462	3660.2				0.020833	76.631538	3585
0.023611	-0.093388	3664.9	0.022222	2.727863	3658.2	0.023611	0.004615	3660.2				0.022222	76.746925	3585
0.025000	-0.042619	3664.8	0.023611	2.861710	3658.0	0.025000	0.025385	3660.2				0.023611	76.998459	3585
0.026389	-0.077234	3664.9	0.025000	3.018633	3657.9	0.026389	0.020769	3660.2				0.024990	77.176155	3585
0.027778	-0.065696	3664.9	0.026389	3.168633	3657.7	0.027778	0.000000	3660.2				0.026389	77.411537	3585
0.029514	-0.068003	3664.9	0.027778	3.297863	3657.6	0.029514	-0.034615	3660.2				0.027778	77.464615	3585
0.031250	-0.051849	3664.9	0.029514	3.415556	3657.5	0.031250	-0.009231	3660.2				0.029514	77.723076	3584
0.032986	-0.040311	3664.8	0.031250	3.563248	3657.3	0.032986	0.000000	3660.2				0.031250	77.755386	3584
0.034722	-0.079542	3664.9	0.032986	3.766325	3657.1	0.034722	-0.004615	3660.2				0.032986	78.025383	3584
0.037037	-0.074926	3664.9	0.034722	3.872479	3657.0	0.037037	-0.025385	3660.2				0.034722	78.302307	3584
0.039352	-0.077234	3664.9	0.037037	4.091710	3656.8	0.039352	0.030000	3660.2				0.037037	78.260773	3584
0.041667	-0.079542	3664.9	0.039352	4.195556	3656.7	0.041667	0.090000	3660.1				0.039352	78.567696	3583
0.043981	0.049689	3664.8	0.041667	4.417094	3656.5	0.043981	-0.027692	3660.2				0.041667	78.678459	3583
0.046296	0.049689	3664.8	0.043981	4.640940	3656.3	0.046296	0.057692	3660.1				0.043981	78.959999	3583
0.048611	-0.047234	3664.8	0.046296	4.664017	3656.2	0.048611	0.009231	3660.2				0.046296	79.008461	3583
0.052083	0.084304	3664.7	0.048611	4.827863	3656.1	0.052083	0.011538	3660.2				0.048611	79.151535	3583
0.055556	0.051997	3664.7	0.052083	5.035556	3655.9	0.055556	-0.009231	3660.2				0.052083	79.290001	3583
0.059028	0.049689	3664.8	0.055556	5.222479	3655.7	0.059028	0.000000	3660.2				0.055556	79.437691	3583
0.062500	-0.008003	3664.8	0.059028	5.358633	3655.5	0.062500	0.018462	3660.2				0.059028	79.666153	3582
0.065972	0.028920	3664.8	0.062500	5.568633	3655.3	0.065972	0.034615	3660.2				0.062500	79.823074	3582
0.069444	-0.012619	3664.8	0.065972	5.750940	3655.1	0.069444	0.036923	3660.2				0.065972	80.005386	3582
0.072917	0.061228	3664.7	0.069444	5.854786	3655.0	0.072917	0.027692	3660.2				0.069444	80.173843	3582
0.076470	-0.054157	3664.9	0.072917	6.044017	3654.9	0.076389	0.106154	3660.1				0.072917	80.266151	3582
0.079942	-0.003388	3664.8	0.076389	6.161710	3654.7	0.079861	0.060000	3660.1				0.076389	80.420769	3582
0.083414	-0.047234	3664.8	0.079942	6.325556	3654.6	0.083449	0.057692	3660.1				0.079861	80.533844	3581
0.090359	-0.038003	3664.8	0.083414	6.470940	3654.4	0.090394	0.101538	3660.1				0.083368	80.702309	3581
0.097303	-0.005696	3664.8	0.090359	6.738633	3654.2	0.097338	0.152308	3660.0				0.090313	80.923843	3581
0.104248	0.035843	3664.8	0.097303	6.953248	3653.9	0.104282	0.170769	3660.0				0.097257	81.223846	3581
0.111192	0.003535	3664.8	0.104248	7.172479	3653.7	0.111227	0.163846	3660.0				0.104201	81.373848	3581
0.118137	0.021997	3664.8	0.111192	7.414786	3653.5	0.118171	0.233077	3660.0				0.111146	83.363075	3579
0.125081	-0.001080	3664.8	0.118137	7.659402	3653.2	0.125116	0.267692	3659.9				0.118206	83.801537	3578
0.132025	0.026612	3664.8	0.125081	7.855556	3653.0	0.132060	0.306923	3659.9				0.125035	84.023079	3578
0.138970	0.045074	3664.8	0.132025	8.058633	3652.8	0.139005	0.346154	3659.9				0.131979	84.295387	3578
0.149387	0.047381	3664.8	0.138970	8.254786	3652.6	0.149421	0.433846	3659.8				0.138924	84.408463	3578
0.159803	0.021997	3664.8	0.149387	8.520171	3652.4	0.159838	0.450000	3659.8				0.149340	84.701538	3577
0.170220	0.045074	3664.8	0.159803	8.787864	3652.1	0.170255	0.567692	3659.6				0.159757	84.886154	3577
0.180637	0.072766	3664.7	0.170220	9.032478	3651.9	0.180671	0.634615	3659.6				0.170174	85.036156	3577
0.194525	0.102766	3664.7	0.180637	9.251710	3651.6	0.194560	0.745385	3659.5				0.180590	85.093849	3577
0.208414	0.125843	3664.7	0.194525	9.535556	3651.4	0.208449	0.860769	3659.3				0.194481	85.407692	3577
0.222303	0.169689	3664.6	0.208414	9.777864	3651.1	0.222338	0.960000	3659.2				0.208368	85.668465	3576
0.236192	0.167381	3664.6	0.222303	10.004017	3650.9	0.236227	1.112308	3659.1				0.222257	85.698463	3576
0.250081	0.190458	3664.6	0.236192	10.220941	3650.7	0.250116	1.174615	3659.0				0.236146	85.924614	3576
0.263970	0.271228	3664.5	0.250081	10.463248	3650.4	0.264005	1.359231	3658.8				0.250035	86.176155	3576
0.277859	0.268920	3664.5	0.263970	10.629402	3650.3	0.277894	1.467692	3658.7				0.263924	86.381538	3576
0.295220	0.301228	3664.5	0.277859	10.839402	3650.1	0.295255	1.615385	3658.6				0.277812	86.476151	3576
0.312581	0.342766	3664.5	0.295220	11.037864	3649.9	0.312616	1.804615	3658.4				0.295174	86.568459	3575

Table C.2-1:
Time and Water Level Data Values Used in Pumping Test Analysis: Burdock Test, Drawdown Data

11-2		3664.8	**11-14C**		3660.9	**11-15**		3660.2	**11-19***		3662.1	**11-11C****		3662
Time (days)	Drawdown (ft)	Elevation (ft)	Time (days)	Drawdown (ft)	Elevation (ft)	Time (days)	Drawdown (f	Elevation (ft)	Time (days)	Drawdown (ft)	Elevation (ft)	Time (days)	Drawdown (ft)	Elevation (ft)
0.329942	0.368151	3664.4	0.312581	11.213248	3649.7	0.329977	1.929231	3658.3				0.312535	86.683846	3575
0.347303	0.411997	3664.4	0.329942	11.411710	3649.5	0.347338	2.118462	3658.1				0.329896	86.801537	3575
0.370451	0.499689	3664.3	0.347303	11.594017	3649.3	0.370486	2.303077	3657.9				0.347257	87.147690	3575
0.393600	0.548151	3664.3	0.370451	11.884787	3649.0	0.393634	2.524615	3657.7				0.370405	87.223846	3575
0.416748	0.561997	3664.2	0.393600	12.039402	3648.9	0.416782	2.764615	3657.4				0.393553	87.353073	3575
0.440012	0.619689	3664.2	0.416748	12.240171	3648.7	0.440046	2.933077	3657.3				0.416701	87.613846	3574
0.463044	0.688920	3664.1	0.440012	12.397094	3648.5	0.463079	3.168462	3657.0				0.439965	87.560768	3574
0.486192	0.762766	3664.0	0.463044	12.602479	3648.3	0.486227	3.297692	3656.9				0.462998	87.625381	3574
0.520914	0.806612	3664.0	0.486192	12.685555	3648.2	0.520949	3.620769	3656.6				0.486146	87.985382	3574
0.555637	0.820458	3664.0	0.520914	12.969402	3647.9	0.555671	3.913846	3656.3				0.520868	88.033844	3574
0.590359	0.894304	3663.9	0.555637	13.144787	3647.8	0.590394	4.144615	3656.1				0.555590	88.010773	3574
0.625081	0.995843	3663.8	0.590359	13.317863	3647.6	0.625116	4.352308	3655.8				0.590312	88.456154	3574
0.659803	1.044304	3663.8	0.625081	13.433248	3647.5	0.659838	4.668461	3655.5				0.625035	88.396156	3574
0.694525	1.097381	3663.7	0.659803	13.574018	3647.3	0.694560	4.846154	3655.4				0.659757	88.737694	3573
0.729595	1.136612	3663.7	0.694525	13.707864	3647.2	0.729630	5.088461	3655.1				0.694479	88.555382	3573
0.763970	1.224304	3663.6	0.729595	13.867094	3647.0	0.764005	5.245385	3655.0				0.729549	88.721535	3573
0.798692	1.295843	3663.5	0.763970	13.973248	3646.9	0.798727	5.476154	3654.7				0.763924	88.975388	3573
0.833414	1.399689	3663.4	0.798692	14.224787	3646.7	0.833449	5.651538	3654.5				0.798646	88.666153	3573
0.902859	1.487381	3663.3	0.833414	14.324018	3646.6	0.902893	6.032308	3654.2				0.833368	88.786156	3573
0.972998	1.598151	3663.2	0.902859	14.557095	3646.3	0.973032	6.346154	3653.9				0.902928	88.931541	3573
1.041748	1.711228	3663.1	0.972998	14.723248	3646.2	1.041782	6.643846	3653.6				0.972951	89.081535	3573
1.111192	1.757381	3663.0	1.041748	14.868632	3646.0	1.111227	6.946154	3653.3				1.041701	89.093079	3573
1.180637	1.840458	3663.0	1.111192	15.067094	3645.8	1.180671	7.181539	3653.0				1.111146	89.376923	3573
1.250081	1.900458	3662.9	1.180637	15.187094	3645.7	1.250116	7.375385	3652.8				1.180590	89.307693	3573
1.319525	2.008920	3662.8	1.250081	15.297863	3645.6	1.319560	7.629231	3652.6				1.250035	89.554619	3572
1.388970	2.117381	3662.7	1.319525	15.378633	3645.5	1.389005	7.820769	3652.4				1.319479	89.826920	3572
1.493137	2.207381	3662.6	1.388970	15.614017	3645.3	1.493171	8.093077	3652.1				1.388924	90.085388	3572
1.597303	2.299689	3662.5	1.493137	15.789402	3645.1	1.597338	8.406923	3651.8				1.493090	89.976921	3572
1.701470	2.440458	3662.4	1.597303	15.893248	3645.0	1.701505	8.614615	3651.6				1.597257	90.182304	3572
1.805637	2.486612	3662.3	1.701470	16.008633	3644.9	1.805671	8.824615	3651.4				1.701424	90.168465	3572
1.944525	2.585843	3662.2	1.805637	16.149403	3644.8	1.944560	9.115385	3651.1				1.805590	90.166153	3572
2.083414	2.634305	3662.2	1.944525	16.310940	3644.6	2.083449	9.323077	3650.9				1.944479	90.678459	3571
2.222303	2.668920	3662.1	2.083414	16.405556	3644.5	2.222338	9.459230	3650.7				2.083368	90.639229	3571
2.361192	2.724304	3662.1	2.222303	16.516325	3644.4	2.361227	9.602307	3650.6				2.222257	90.736153	3571
2.500081	2.844305	3662.0	2.361192	16.587864	3644.3	2.500116	9.766154	3650.4				2.361146	90.819229	3571
2.638970	2.837381	3662.0	2.500081	16.634018	3644.3	2.639005	9.953077	3650.2				2.500035	91.047691	3571
2.777859	2.966612	3661.8	2.638970	16.770170	3644.1	2.777894	10.040770	3650.2				2.638924	91.165382	3571
2.951470	3.084305	3661.7	2.777859	16.874018	3644.0	2.951505	10.250770	3649.9				2.777813	91.137695	3571
2.999988	3.063535	3661.7	2.951470	17.010172	3643.9	2.999988	10.373077	3649.8				2.951423	91.176926	3571
			2.999988	17.014786	3643.9							2.999988	91.066154	3571

General Methodology: PSI, temperature, and time readings from Win-Situ™ digital data log were exported to Excel ".csv" file.
Drawdown was calculated as PSI at time after pumping minus average PSI before pumping; therefore, at small or zero changes in PSI negative drawdowns may be calculated.
A FORTRAN program was written to read the ".csv" file and produce a second file by extracting the records at a frequency of 40 per log-time cycle (in minutes) in order achieve equal representation of data throughout the pumping and drawdown phases of the test.
Elevation (in ft above mean sea level) based on initial groundwater elevation (see Table 5.2) minus drawdown.

Notes: * = early time data filtered to remove calculated negative drawdown values
** = initial measurement of groundwater elevation not available; approximate initial groundwater elevation estimated from adjacent wells.

Knight Piésold
CONSULTING

Appendix C-3
Time and Water Level Data Values Used in Pumping Test Analysis: Burdock Test, Recovery Data

This page intentionally left blank

Table C.3-1:
Time and Water Level Data Values Used in Pumping Test Analysis: Burdock Test, Recovery Data

11-2		3664.8	**11-14C**		3660.9	**11-15**		3660.2	**11-19**		3662.1	**11-11C**		3662
Time (days)	Drawdown (ft)	Elevation (ft)	Time (days)	Drawdown (ft)	Elevation (ft)	Time (days)	Drawdown (ft)	Elevation (ft)	Time (days)	Drawdown (ft)	Elevation (ft)	Time (days)	Drawdown (ft)	Elevation (ft)
3.000035	3.052742	3661.7	3.000035	17.052603	3643.8	3.000035	10.293365	3649.9	3.000035	3.347297	3658.8	3.002651	91.335097	3571
3.000046	3.045798	3661.8	3.000046	17.017954	3643.9	3.000046	10.353427	3649.8	3.000046	3.370374	3658.7	3.002662	89.775840	3572
3.000058	3.094334	3661.7	3.000058	17.075690	3643.8	3.000058	10.328013	3649.9	3.000058	3.455759	3658.6	3.002674	89.062054	3573
3.000070	3.050451	3661.7	3.000070	16.999449	3643.9	3.000070	10.318778	3649.9	3.000070	3.448836	3658.7	3.002685	88.339016	3574
3.000081	3.089717	3661.7	3.000081	17.036424	3643.9	3.000081	10.309544	3649.9	3.000081	3.444220	3658.7	3.002697	87.676058	3574
3.000093	3.061977	3661.7	3.000093	17.006393	3643.9	3.000093	10.328013	3649.9	3.000093	3.444220	3658.7	3.002708	87.077762	3575
3.000104	3.075829	3661.7	3.000104	17.027189	3643.9	3.000104	10.445812	3649.8	3.000104	3.358835	3658.7	3.002720	86.327019	3576
3.000116	3.055068	3661.7	3.000116	17.013337	3643.9	3.000116	10.274895	3649.9	3.000116	3.351912	3658.7	3.002732	85.668660	3576
3.000127	3.078155	3661.7	3.000127	16.997158	3643.9	3.000127	10.291038	3649.9	3.000127	3.430374	3658.7	3.002743	85.077308	3577
3.000139	3.057359	3661.7	3.000139	16.980979	3643.9	3.000139	10.399637	3649.8	3.000139	3.437297	3658.7	3.002755	84.428184	3578
3.000151	3.066594	3661.7	3.000151	17.052603	3643.8	3.000151	10.307217	3649.9	3.000151	3.335759	3658.8	3.002766	83.869172	3578
3.000162	3.055068	3661.7	3.000162	17.020246	3643.9	3.000162	10.328013	3649.9	3.000162	3.400374	3658.7	3.002778	83.215448	3579
3.000174	3.071212	3661.7	3.000174	17.001776	3643.9	3.000174	10.267951	3649.9	3.000174	3.432682	3658.7	3.002789	82.612535	3579
3.000185	3.089717	3661.7	3.000185	17.013337	3643.9	3.000185	10.445812	3649.8	3.000185	3.393451	3658.7	3.002801	82.021165	3580
3.000197	3.048124	3661.8	3.000197	17.020246	3643.9	3.000197	10.323396	3649.9	3.000197	3.409605	3658.7	3.002813	81.385929	3581
3.000208	3.050451	3661.7	3.000208	17.004067	3643.9	3.000208	10.291038	3649.9	3.000208	3.432682	3658.7	3.002824	80.928536	3581
3.000220	3.098952	3661.7	3.000220	17.013337	3643.9	3.000220	10.300273	3649.9	3.000220	3.391143	3658.7	3.002836	80.267886	3582
3.000232	3.036563	3661.8	3.000232	17.027189	3643.9	3.000232	10.300273	3649.9	3.000232	3.448836	3658.7	3.002847	79.845142	3582
3.000243	3.075829	3661.7	3.000243	16.992541	3643.9	3.000243	10.330304	3649.9	3.000243	3.356528	3658.7	3.002859	79.119812	3583
3.000255	3.085099	3661.7	3.000255	16.990214	3643.9	3.000255	10.281804	3649.9	3.000255	3.488066	3658.6	3.002870	78.657802	3583
3.000266	3.087390	3661.7	3.000266	17.020246	3643.9	3.000266	10.399637	3649.8	3.000266	3.344989	3658.8	3.002882	78.015622	3584
3.000278	3.085099	3661.7	3.000278	16.974036	3643.9	3.000278	10.314161	3649.9	3.000278	3.326528	3658.8	3.002894	77.498184	3585
3.000289	3.029654	3661.8	3.000289	17.057220	3643.8	3.000289	10.314161	3649.9	3.000289	3.483451	3658.6	3.002905	76.918375	3585
3.000301	3.071212	3661.7	3.000301	16.990214	3643.9	3.000301	10.371897	3649.8	3.000301	3.425759	3658.7	3.002917	76.403246	3586
3.000313	3.071212	3661.7	3.000313	17.034098	3643.9	3.000313	10.328013	3649.9	3.000313	3.391143	3658.7	3.002928	75.733344	3586
3.000324	3.101243	3661.7	3.000324	17.015628	3643.9	3.000324	10.295656	3649.9	3.000324	3.400374	3658.7	3.002940	75.220524	3587
3.000336	3.071212	3661.7	3.000336	17.022572	3643.9	3.000336	10.297982	3649.9	3.000336	3.432682	3658.7	3.002951	74.786254	3587
3.000347	3.038889	3661.8	3.000347	16.969418	3643.9	3.000347	10.316452	3649.9	3.000347	3.451143	3658.6	3.002963	74.093246	3588
3.000359	3.096625	3661.7	3.000359	17.006393	3643.9	3.000359	10.334957	3649.9	3.000359	3.455759	3658.6	3.002974	73.559648	3588
3.000370	3.031945	3661.8	3.000370	17.020246	3643.9	3.000370	10.323396	3649.9	3.000370	3.437297	3658.7	3.002986	73.032957	3589
3.000382	3.082773	3661.7	3.000382	16.918626	3644.0	3.000382	10.274895	3649.9	3.000382	3.421143	3658.7	3.002998	72.704941	3589
3.000394	3.043507	3661.8	3.000394	17.022572	3643.9	3.000394	10.316452	3649.9	3.000394	3.425759	3658.7	3.003009	71.935711	3590
3.000405	3.085099	3661.7	3.000405	16.997158	3643.9	3.000405	10.286421	3649.9	3.000405	3.428066	3658.7	3.003021	71.480644	3591
3.000417	3.048124	3661.8	3.000417	17.008684	3643.9	3.000417	10.284130	3649.9	3.000417	3.384220	3658.7	3.003032	70.889274	3591
3.000428	3.096625	3661.7	3.000428	17.031807	3643.9	3.000428	10.302600	3649.9	3.000428	3.458066	3658.6	3.003044	70.441134	3592
3.000451	3.082773	3661.7	3.000451	17.029480	3643.9	3.000451	10.297982	3649.9	3.000451	3.432682	3658.7	3.003067	69.438598	3593
3.000486	3.034272	3661.8	3.000486	17.027189	3643.9	3.000486	10.318778	3649.9	3.000486	3.432682	3658.7	3.003102	68.024879	3594
3.000498	3.041180	3661.8	3.000498	17.041042	3643.9	3.000498	10.311835	3649.9	3.000498	3.414220	3658.7	3.003113	67.482028	3595
3.000509	3.038889	3661.8	3.000509	17.011011	3643.9	3.000509	10.286421	3649.9	3.000509	3.451143	3658.6	3.003125	67.024652	3595
3.000532	3.055068	3661.7	3.000532	16.992541	3643.9	3.000532	10.348810	3649.9	3.000532	3.441912	3658.7	3.003148	66.121445	3596
3.000544	3.034272	3661.8	3.000544	17.008684	3643.9	3.000544	10.281804	3649.9	3.000544	3.402682	3658.7	3.003160	65.712570	3596
3.000567	3.068920	3661.7	3.000567	17.057220	3643.8	3.000567	10.286421	3649.9	3.000567	3.414220	3658.7	3.003183	64.809363	3597
3.000590	3.094334	3661.7	3.000590	17.022572	3643.9	3.000590	10.261007	3649.9	3.000590	3.448836	3658.7	3.003206	64.010101	3598
3.000625	3.052742	3661.7	3.000625	17.008684	3643.9	3.000625	10.295656	3649.9	3.000625	3.356528	3658.7	3.003241	62.806583	3599
3.000660	3.087390	3661.7	3.000660	17.036424	3643.9	3.000660	10.293365	3649.9	3.000660	3.432682	3658.7	3.003276	61.730133	3600
3.000683	3.075829	3661.7	3.000683	17.022572	3643.9	3.000683	10.288747	3649.9	3.000683	3.476528	3658.6	3.003299	60.965520	3601
3.000718	3.055068	3661.7	3.000718	17.017954	3643.9	3.000718	10.425015	3649.8	3.000718	3.340374	3658.8	3.003333	59.974528	3602
3.000764	3.061977	3661.7	3.000764	16.990214	3643.9	3.000764	10.427342	3649.8	3.000764	3.354220	3658.7	3.003380	58.627797	3603
3.000799	3.048124	3661.8	3.000799	17.015628	3643.9	3.000799	10.316452	3649.9	3.000799	3.428066	3658.7	3.003415	57.664528	3604
3.000822	3.085099	3661.7	3.000822	16.999449	3643.9	3.000822	10.286421	3649.9	3.000822	3.448836	3658.7	3.003438	57.070866	3605

Table C.3-1:
Time and Water Level Data Values Used in Pumping Test Analysis: Burdock Test, Recovery Data

11-2		3664.8	**11-14C**		3660.9	**11-15**		3660.2	**11-19**		3662.1	**11-11C**		3662
Time (days)	Drawdown (ft)	Elevation (ft)	Time (days)	Drawdown (ft)	Elevation (ft)	Time (days)	Drawdown (ft)	Elevation (ft)	Time (days)	Drawdown (ft)	Elevation (ft)	Time (days)	Drawdown (ft)	Elevation (ft)
3.000857	3.041180	3661.8	3.000857	16.978688	3643.9	3.000857	10.323396	3649.9	3.000857	3.340374	3658.8	3.003472	56.197673	3606
3.000938	3.041180	3661.8	3.000938	17.029480	3643.9	3.000938	10.358045	3649.8	3.000938	3.448836	3658.7	3.003553	54.402802	3608
3.000995	3.050451	3661.7	3.000995	16.976362	3643.9	3.000995	10.277186	3649.9	3.000995	3.432682	3658.7	3.003611	53.229332	3609
3.001076	3.066594	3661.7	3.001076	17.038715	3643.9	3.001076	10.351101	3649.8	3.001076	3.354220	3658.7	3.003692	51.808687	3610
3.001134	3.055068	3661.7	3.001134	17.008684	3643.9	3.001134	10.304926	3649.9	3.001134	3.354220	3658.7	3.003751	50.990938	3611
3.001215	3.092008	3661.7	3.001215	17.038715	3643.9	3.001215	10.277186	3649.9	3.001215	3.349605	3658.8	3.003821	50.133923	3612
3.001285	3.038889	3661.8	3.001285	17.013337	3643.9	3.001285	10.346483	3649.9	3.001285	3.344989	3658.8	3.003900	49.177597	3613
3.001354	3.082773	3661.7	3.001354	17.013337	3643.9	3.001354	10.300273	3649.9	3.001354	3.328835	3658.8	3.003971	48.334434	3614
3.001423	3.094334	3661.7	3.001423	16.914009	3644.0	3.001423	10.323396	3649.9	3.001423	3.421143	3658.7	3.004039	47.567513	3614
3.001528	3.103569	3661.7	3.001528	16.987923	3643.9	3.001528	10.346483	3649.9	3.001528	3.354220	3658.7	3.004144	46.484136	3616
3.001620	3.061977	3661.7	3.001620	16.987923	3643.9	3.001620	10.385749	3649.8	3.001620	3.358835	3658.7	3.004236	45.405359	3617
3.001736	3.071212	3661.7	3.001736	16.967127	3643.9	3.001736	10.325687	3649.9	3.001736	3.384220	3658.7	3.004352	44.317348	3618
3.001840	3.075829	3661.7	3.001840	16.971745	3643.9	3.001840	10.293365	3649.9	3.001840	3.462682	3658.6	3.004457	43.307886	3619
3.001979	3.094334	3661.7	3.001979	16.976362	3643.9	3.001979	10.302600	3649.9	3.001979	3.441912	3658.7	3.004595	42.021218	3620
3.002130	3.085099	3661.7	3.002130	16.946331	3644.0	3.002130	10.334957	3649.9	3.002130	3.351912	3658.7	3.004745	40.621351	3621
3.002245	3.057359	3661.7	3.002245	16.955566	3643.9	3.002245	10.316452	3649.9	3.002245	3.363451	3658.7	3.004861	39.639594	3622
3.002396	3.031945	3661.8	3.002396	16.955566	3643.9	3.002396	10.304926	3649.9	3.002396	3.351912	3658.7	3.005012	38.581614	3623
3.002535	3.045798	3661.8	3.002535	16.946331	3644.0	3.002535	10.341866	3649.9	3.002535	3.356528	3658.7	3.005151	37.555973	3624
3.002674	3.055068	3661.7	3.002674	16.962510	3643.9	3.002674	10.337248	3649.9	3.002674	3.437297	3658.7	3.005289	36.467962	3626
3.002812	3.057359	3661.7	3.002812	16.950948	3643.9	3.002812	10.316452	3649.9	3.002812	3.437297	3658.7	3.005428	35.574007	3626
3.002986	3.048124	3661.8	3.002986	16.883978	3644.0	3.002986	10.286421	3649.9	3.002986	3.377297	3658.7	3.005602	34.502157	3627
3.003160	3.050451	3661.7	3.003160	16.918626	3644.0	3.003160	10.348810	3649.9	3.003160	3.377297	3658.7	3.005776	33.561992	3628
3.003322	3.085099	3661.7	3.003322	16.877034	3644.0	3.003322	10.364953	3649.8	3.003322	3.432682	3658.7	3.005938	32.691125	3629
3.003495	3.080446	3661.7	3.003495	16.842385	3644.1	3.003495	10.328013	3649.9	3.003495	3.425759	3658.7	3.006111	31.808696	3630
3.003727	3.064303	3661.7	3.003727	16.865472	3644.0	3.003727	10.323396	3649.9	3.003727	3.409605	3658.7	3.006343	30.702214	3631
3.003958	3.048124	3661.8	3.003958	16.840059	3644.1	3.003958	10.279512	3649.9	3.003958	3.511143	3658.6	3.006574	29.701987	3632
3.004201	3.075829	3661.7	3.004201	16.826206	3644.1	3.004201	10.328013	3649.9	3.004201	3.453451	3658.6	3.006817	28.727157	3633
3.004433	3.126656	3661.7	3.004433	16.761527	3644.1	3.004433	10.422724	3649.8	3.004433	3.358835	3658.7	3.007048	27.902481	3634
3.004664	3.048124	3661.8	3.004664	16.775379	3644.1	3.004664	10.330304	3649.9	3.004664	3.377297	3658.7	3.007280	27.126325	3635
3.004884	3.094334	3661.7	3.004884	16.724587	3644.2	3.004884	10.362662	3649.8	3.004884	3.386528	3658.7	3.007500	26.454114	3636
3.005231	3.055068	3661.7	3.005231	16.641402	3644.3	3.005231	10.302600	3649.9	3.005231	3.458066	3658.6	3.007847	25.465448	3637
3.005590	3.048124	3661.8	3.005590	16.655255	3644.2	3.005590	10.348810	3649.9	3.005590	3.393451	3658.7	3.008206	24.559915	3637
3.005926	3.186719	3661.6	3.005926	16.625259	3644.3	3.005926	10.302600	3649.9	3.005926	3.388836	3658.7	3.008542	23.811480	3638
3.006285	3.080446	3661.7	3.006285	16.549018	3644.4	3.006285	10.355718	3649.8	3.006285	3.349605	3658.8	3.008901	23.319456	3639
3.006620	3.057359	3661.7	3.006620	16.477394	3644.4	3.006620	10.302600	3649.9	3.006620	3.388836	3658.7	3.009236	22.707308	3639
3.006968	3.052742	3661.7	3.006968	16.417332	3644.5	3.006968	10.323396	3649.9	3.006968	3.368066	3658.7	3.009583	22.210649	3640
3.007315	3.048124	3661.8	3.007315	16.354979	3644.5	3.007315	10.297982	3649.9	3.007315	3.393451	3658.7	3.009931	21.700137	3640
3.007673	3.089717	3661.7	3.007673	16.301825	3644.6	3.007673	10.351101	3649.8	3.007673	3.494989	3658.6	3.010289	21.258923	3641
3.008009	3.101243	3661.7	3.008009	16.241798	3644.7	3.008009	10.358045	3649.8	3.008009	3.474220	3658.6	3.010625	20.866227	3641
3.008356	3.195954	3661.6	3.008356	16.195588	3644.7	3.008356	10.316452	3649.9	3.008356	3.508836	3658.6	3.010972	20.501254	3641
3.009062	3.034272	3661.8	3.009062	16.068520	3644.8	3.009062	10.307217	3649.9	3.009062	3.379605	3658.7	3.011678	19.852148	3642
3.009745	3.154396	3661.6	3.009745	16.054667	3644.8	3.009745	10.291038	3649.9	3.009745	3.453451	3658.6	3.012361	19.337019	3643
3.010451	3.061977	3661.7	3.010451	15.899894	3645.0	3.010451	10.316452	3649.9	3.010451	3.416528	3658.7	3.013067	18.884243	3643
3.011134	3.087390	3661.7	3.011134	15.786713	3645.1	3.011134	10.300273	3649.9	3.011134	3.361143	3658.7	3.013750	18.438429	3644
3.011840	3.112804	3661.7	3.011840	15.638884	3645.3	3.011840	10.339575	3649.9	3.011840	3.388836	3658.7	3.014456	18.108086	3644
3.012523	3.122039	3661.7	3.012523	15.544173	3645.4	3.012523	10.316452	3649.9	3.012523	3.391143	3658.7	3.015139	17.823954	3644
3.013218	3.182101	3661.6	3.013218	15.472550	3645.4	3.013218	10.314161	3649.9	3.013218	3.458066	3658.6	3.015833	17.537513	3644
3.013912	3.098952	3661.7	3.013912	15.354752	3645.5	3.013912	10.307217	3649.9	3.013912	3.379605	3658.7	3.016528	17.288046	3645
3.014954	3.025037	3661.8	3.014954	15.218448	3645.7	3.014954	10.297982	3649.9	3.014954	3.409605	3658.7	3.017570	16.902277	3645
3.015995	3.061977	3661.7	3.015995	15.045205	3645.9	3.015995	10.318778	3649.9	3.015995	3.485759	3658.6	3.018611	16.613527	3645

Table C.3-1:
Time and Water Level Data Values Used in Pumping Test Analysis: Burdock Test, Recovery Data

11-2		3664.8	**11-14C**		3660.9	**11-15**		3660.2	**11-19**		3662.1	**11-11C**		3662
Time (days)	Drawdown (ft)	Elevation (ft)	Time (days)	Drawdown (ft)	Elevation (ft)	Time (days)	Drawdown (ft)	Elevation (ft)	Time (days)	Drawdown (ft)	Elevation (ft)	Time (days)	Drawdown (ft)	Elevation (ft)
3.017048	3.006532	3661.8	3.017048	14.899667	3646.0	3.017048	10.344192	3649.9	3.017048	3.515759	3658.6	3.019664	16.340938	3646
3.018090	3.055068	3661.7	3.018090	14.763364	3646.1	3.018090	10.353427	3649.8	3.018090	3.506528	3658.6	3.020706	16.109941	3646
3.019479	3.108186	3661.7	3.019479	14.610917	3646.3	3.019479	10.332631	3649.9	3.019479	3.458066	3658.6	3.022095	15.758820	3646
3.020856	3.048124	3661.8	3.020856	14.421496	3646.5	3.020856	10.325687	3649.9	3.020856	3.414220	3658.7	3.023472	15.500101	3646
3.022245	3.022711	3661.8	3.022245	14.308315	3646.6	3.022245	10.341866	3649.9	3.022245	3.501913	3658.6	3.024861	15.246000	3647
3.023634	3.036563	3661.8	3.023634	14.038035	3646.9	3.023634	10.323396	3649.9	3.023634	3.504220	3658.6	3.026250	14.987281	3647
3.025035	3.038889	3661.8	3.025035	13.987207	3646.9	3.025035	10.267951	3649.9	3.025035	3.448836	3658.7	3.027651	14.830199	3647
3.026423	3.075829	3661.7	3.026423	13.850939	3647.0	3.026423	10.311835	3649.9	3.026423	3.529605	3658.6	3.029039	14.666191	3647
3.027812	3.094334	3661.7	3.027812	13.663809	3647.2	3.027812	10.358045	3649.8	3.027812	3.414220	3658.7	3.030428	14.379750	3648
3.029537	3.027328	3661.8	3.029537	13.550628	3647.3	3.029537	10.316452	3649.9	3.029537	3.402682	3658.7	3.032153	14.231903	3648
3.031285	3.055068	3661.7	3.031285	13.342737	3647.6	3.031285	10.316452	3649.9	3.031285	3.441912	3658.7	3.033901	13.991672	3648
3.033009	3.075829	3661.7	3.033009	13.254934	3647.6	3.033009	10.325687	3649.9	3.033009	3.430374	3658.7	3.035625	13.827664	3648
3.034745	3.061977	3661.7	3.034745	13.146371	3647.8	3.034745	10.321070	3649.9	3.034745	3.511143	3658.6	3.037361	13.647477	3648
3.037060	3.101243	3661.7	3.037060	12.896887	3648.0	3.037060	10.355718	3649.8	3.037060	3.384220	3658.7	3.039676	13.469616	3649
3.039375	3.075829	3661.7	3.039375	12.797559	3648.1	3.039375	10.328013	3649.9	3.039375	3.499605	3658.6	3.041991	13.236294	3649
3.041701	3.168249	3661.6	3.041701	12.642786	3648.3	3.041701	10.330304	3649.9	3.041701	3.471912	3658.6	3.044317	12.996062	3649
3.044005	3.064303	3661.7	3.044005	12.469543	3648.4	3.044005	10.330304	3649.9	3.044005	3.476528	3658.6	3.046620	12.827437	3649
3.046331	3.057359	3661.7	3.046331	12.388684	3648.5	3.046331	10.321070	3649.9	3.046331	3.501913	3658.6	3.048947	12.681899	3649
3.048634	3.045798	3661.8	3.048634	12.099934	3648.8	3.048634	10.297982	3649.9	3.048634	3.488066	3658.6	3.051250	12.517891	3649
3.052106	3.048124	3661.8	3.052106	12.032963	3648.9	3.052106	10.328013	3649.9	3.052106	3.444220	3658.7	3.054722	12.203727	3650
3.055590	3.034272	3661.8	3.055590	11.838924	3649.1	3.055590	10.291038	3649.9	3.055590	3.483451	3658.6	3.058206	12.018923	3650
3.059062	3.041180	3661.8	3.059062	11.656446	3649.2	3.059062	10.316452	3649.9	3.059062	3.379605	3658.7	3.061678	11.797179	3650
3.062535	3.057359	3661.7	3.062535	11.453137	3649.4	3.062535	10.311835	3649.9	3.062535	3.464989	3658.6	3.065151	11.580035	3650
3.065995	3.029654	3661.8	3.065995	11.242954	3649.7	3.065995	10.364953	3649.8	3.065995	3.374990	3658.7	3.068611	11.395230	3651
3.069468	3.057359	3661.7	3.069468	11.085855	3649.8	3.069468	10.431959	3649.8	3.069468	3.464989	3658.6	3.072083	11.210426	3651
3.072951	3.048124	3661.8	3.072951	11.011940	3649.9	3.072951	10.263334	3649.9	3.072951	3.361143	3658.7	3.075567	11.048727	3651
3.076470	3.087390	3661.7	3.076412	10.850259	3650.0	3.076505	10.302600	3649.9	3.076412	3.368066	3658.7	3.079028	10.907824	3651
3.079942	3.061977	3661.7	3.079942	10.653893	3650.2	3.079977	10.286421	3649.9	3.079896	3.370374	3658.7	3.082500	10.704532	3651
3.083530	3.006532	3661.8	3.083530	10.515299	3650.4	3.083449	10.270277	3649.9	3.083484	3.351912	3658.7	3.086100	10.554394	3651
3.090590	3.087390	3661.7	3.090590	10.221931	3650.7	3.090509	10.247155	3650.0	3.090544	3.340374	3658.8	3.093160	10.263335	3652
3.097419	3.048124	3661.8	3.097419	10.027892	3650.9	3.097338	10.205563	3650.0	3.097373	3.326528	3658.8	3.099988	10.020778	3652
3.104363	3.041180	3661.8	3.104363	9.868502	3651.0	3.104282	10.191710	3650.0	3.104317	3.342682	3658.8	3.106933	9.722793	3652
3.111308	3.001914	3661.8	3.111308	9.542777	3651.4	3.111227	10.161679	3650.0	3.111262	3.261913	3658.8	3.113877	9.533371	3652
3.118252	3.013476	3661.8	3.118252	9.351064	3651.5	3.118171	10.177858	3650.0	3.118206	3.268836	3658.8	3.120822	9.297757	3653
3.125197	3.018093	3661.8	3.125197	9.136229	3651.8	3.125116	10.170914	3650.0	3.125151	3.280374	3658.8	3.127766	9.062125	3653
3.132141	3.001914	3661.8	3.132141	8.946807	3652.0	3.132060	10.085473	3650.1	3.132095	3.261913	3658.8	3.134711	8.865778	3653
3.139086	2.997297	3661.8	3.139086	8.755059	3652.1	3.139005	10.043881	3650.2	3.139039	3.259605	3658.8	3.141655	8.678665	3653
3.149502	3.025037	3661.8	3.149502	8.542550	3652.4	3.149421	10.020794	3650.2	3.149456	3.201912	3658.9	3.152072	8.394532	3654
3.159919	3.018093	3661.8	3.159919	8.369307	3652.5	3.159838	9.988436	3650.2	3.159873	3.197297	3658.9	3.162488	8.124270	3654
3.170336	2.964975	3661.8	3.170336	8.092118	3652.8	3.170255	9.875255	3650.3	3.170289	3.178836	3658.9	3.172905	7.951027	3654
3.180752	2.953413	3661.8	3.180752	7.958106	3652.9	3.180671	9.771310	3650.4	3.180706	3.144220	3659.0	3.183322	7.696925	3654
3.194641	2.925709	3661.9	3.194641	7.593150	3653.3	3.194560	9.674272	3650.5	3.194595	3.104990	3659.0	3.197211	7.368892	3655
3.208530	2.941852	3661.9	3.208530	7.445286	3653.5	3.208449	9.611919	3650.6	3.208484	3.132682	3659.0	3.211100	7.227988	3655
3.222419	2.916438	3661.9	3.222419	7.110361	3653.8	3.222338	9.440967	3650.8	3.222373	3.102682	3659.0	3.224988	6.978505	3655
3.236308	2.877172	3661.9	3.236308	6.913996	3654.0	3.236227	9.343965	3650.9	3.236262	3.102682	3659.0	3.238877	6.726712	3655
3.250197	2.854085	3661.9	3.250197	6.789254	3654.1	3.250116	9.253872	3650.9	3.250151	3.044989	3659.1	3.252766	6.521129	3655
3.264086	2.821728	3662.0	3.264086	6.609067	3654.3	3.264005	9.133747	3651.1	3.264039	3.042682	3659.1	3.266655	6.370973	3656
3.277974	2.796349	3662.0	3.277974	6.359618	3654.5	3.277893	9.057506	3651.1	3.277928	2.998836	3659.1	3.280544	6.190804	3656
3.295336	2.805584	3662.0	3.295336	6.246402	3654.7	3.295255	8.875028	3651.3	3.295289	2.964220	3659.1	3.297905	5.945938	3656
3.312697	2.872555	3661.9	3.312697	6.077777	3654.8	3.312616	8.766465	3651.4	3.312651	2.941143	3659.2	3.315266	5.779621	3656

Table C.3-1:
Time and Water Level Data Values Used in Pumping Test Analysis: Burdock Test, Recovery Data

11-2		3664.8	**11-14C**		3660.9	**11-15**		3660.2	**11-19**		3662.1	**11-11C**		3662
Time (days)	Drawdown (ft)	Elevation (ft)	Time (days)	Drawdown (ft)	Elevation (ft)	Time (days)	Drawdown (ft)	Elevation (ft)	Time (days)	Drawdown (ft)	Elevation (ft)	Time (days)	Drawdown (ft)	Elevation (ft)
3.330058	2.810202	3662.0	3.330058	5.916095	3655.0	3.329977	8.583952	3651.6	3.330012	3.038066	3659.1	3.332627	5.627157	3656
3.347419	2.784788	3662.0	3.347419	5.733582	3655.2	3.347338	8.438414	3651.8	3.347373	2.945759	3659.2	3.349988	5.426191	3657
3.370567	2.727017	3662.1	3.370567	5.514129	3655.4	3.370486	8.295202	3651.9	3.370521	2.890374	3659.2	3.373137	5.204430	3657
3.393715	2.715491	3662.1	3.393715	5.336269	3655.6	3.393634	8.068841	3652.1	3.393669	2.844220	3659.3	3.396285	5.054274	3657
3.416863	2.634632	3662.2	3.416863	5.156082	3655.7	3.416782	7.932537	3652.3	3.416817	2.830374	3659.3	3.419433	4.848691	3657
3.440127	2.639250	3662.2	3.440127	4.957425	3655.9	3.440046	7.729263	3652.5	3.440081	2.784220	3659.3	3.442697	4.696227	3657
3.463160	2.655428	3662.1	3.463160	4.832683	3656.1	3.463079	7.556020	3652.6	3.463113	2.731143	3659.4	3.465729	4.548398	3657
3.486308	2.576896	3662.2	3.486308	4.701033	3656.2	3.486227	7.412773	3652.8	3.486262	2.682682	3659.4	3.488877	4.389007	3658
3.521030	2.537630	3662.3	3.521030	4.520846	3656.4	3.520949	7.110171	3653.1	3.520984	2.687297	3659.4	3.523600	4.261956	3658
3.555752	2.445211	3662.4	3.555752	4.262127	3656.6	3.555671	6.911514	3653.3	3.555706	2.613451	3659.5	3.558322	4.070226	3658
3.590474	2.401327	3662.4	3.590474	4.142003	3656.8	3.590393	6.645887	3653.6	3.590428	2.509605	3659.6	3.593044	3.922379	3658
3.625197	2.387475	3662.4	3.625197	3.984938	3656.9	3.625116	6.458756	3653.7	3.625151	2.541913	3659.6	3.627766	3.806872	3658
3.659919	2.320469	3662.5	3.659919	3.855544	3657.0	3.659838	6.262426	3653.9	3.659873	2.486528	3659.6	3.662488	3.647481	3658
3.694641	2.281203	3662.5	3.694641	3.696188	3657.2	3.694560	6.059117	3654.1	3.694595	2.414989	3659.7	3.697211	3.541227	3658
3.729711	2.269641	3662.5	3.729711	3.603769	3657.3	3.729630	5.839664	3654.4	3.729664	2.368835	3659.7	3.732280	3.393398	3659
3.764086	2.198053	3662.6	3.764086	3.490588	3657.4	3.764005	5.659512	3654.5	3.764039	2.350374	3659.7	3.766655	3.300995	3659
3.798808	2.174930	3662.6	3.798808	3.361229	3657.5	3.798727	5.483943	3654.7	3.798762	2.331913	3659.8	3.801377	3.134679	3659
3.833530	2.131047	3662.7	3.833530	3.296549	3657.6	3.833449	5.363819	3654.8	3.833484	2.297297	3659.8	3.836100	3.104648	3659
3.902974	2.059459	3662.7	3.902974	3.146393	3657.8	3.902893	5.033476	3655.2	3.902928	2.267297	3659.8	3.905544	2.956801	3659
3.973113	2.089490	3662.7	3.973113	3.010090	3657.9	3.973032	4.802497	3655.4	3.973067	2.179605	3659.9	3.975683	2.804336	3659
4.041863	1.948569	3662.9	4.041863	2.797581	3658.1	4.041782	4.504512	3655.7	4.041817	2.274220	3659.8	4.044433	2.663433	3659
4.111308	1.927773	3662.9	4.111308	2.605868	3658.3	4.111227	4.303529	3655.9	4.111262	2.031913	3660.1	4.113877	2.538691	3659
4.180752	1.796087	3663.0	4.180752	2.529627	3658.4	4.180671	4.035576	3656.2	4.180706	1.974220	3660.1	4.183322	2.340035	3660
4.250197	1.752204	3663.0	4.250197	2.402559	3658.5	4.250116	3.811505	3656.4	4.250151	1.928066	3660.2	4.252766	2.270737	3660
4.319641	1.708320	3663.1	4.319641	2.354058	3658.5	4.319560	3.635936	3656.6	4.319595	1.907297	3660.2	4.322211	2.125199	3660
4.389086	1.664436	3663.1	4.389086	2.250112	3658.6	4.389005	3.476545	3656.7	4.389039	1.828836	3660.3	4.391655	2.072063	3660
4.493252	1.664436	3663.1	4.493252	2.160019	3658.7	4.493171	3.296359	3656.9	4.493206	1.798836	3660.3	4.495822	1.975044	3660
4.597419	1.560491	3663.2	4.597419	2.065308	3658.8	4.597338	3.109263	3657.1	4.597373	1.734220	3660.4	4.599988	1.963500	3660
4.701586	1.535077	3663.3	4.701586	1.919770	3659.0	4.701505	2.919842	3657.3	4.701539	1.701913	3660.4	4.704155	1.820288	3660
4.805752	1.456545	3663.3	4.805752	1.910535	3659.0	4.805671	2.751216	3657.4	4.805706	1.688066	3660.4	4.808322	1.732504	3660
4.944641	1.433422	3663.4	4.944641	1.792737	3659.1	4.944560	2.612622	3657.6	4.944595	1.618836	3660.5	4.947211	1.644719	3660
5.083530	1.361834	3663.4	5.083530	1.665668	3659.2	5.083449	2.460140	3657.7	5.083368	1.549605	3660.6	5.086100	1.554625	3660
5.222419	1.347946	3663.5	5.222419	1.540926	3659.4	5.222338	2.229161	3658.0	5.222373	1.480374	3660.6	5.224988	1.439136	3661
5.361308	1.165469	3663.6	5.361308	1.370010	3659.5	5.361227	2.097475	3658.1	5.361146	1.436528	3660.7	5.363877	1.337481	3661
5.500197	1.075375	3663.7	5.500197	1.339979	3659.6	5.500116	1.917288	3658.3	5.500150	1.471143	3660.6	5.502766	1.191961	3661
5.639086	1.015313	3663.8	5.639086	1.268355	3659.6	5.639005	1.797164	3658.4	5.633947	1.401912	3660.7	5.641655	1.044114	3661
5.777974	0.971429	3663.8	5.777974	1.092786	3659.8	5.777894	1.688601	3658.5	5.777813	1.187297	3660.9	5.780544	1.030262	3661
5.909340	0.927546	3663.9	5.909340	1.182879	3659.7	5.909375	1.612395	3658.6	5.893901	1.094989	3661.0	5.911910	1.062601	3661

General Methodology: PSI, temperature, and time readings from Win-Situ™ digital data log were exported to Excel ".csv" file.
Drawdown was calculated as PSI at time after pumping minus average PSI before pumping; therefore, at small or zero changes in PSI negative drawdowns may be calculated.
A FORTRAN program was written to read the ".csv" file and produce a second file by extracting the records at a frequency of 40 per log-time cycle (in minutes) in order achieve equal representation of data throughout the pumping and drawdown phases of the test.
Elevation (in ft above mean sea level) based on initial groundwater elevation (see Table 5.2) minus drawdown.

Note Extracted manually from digital data log.

Knight Piésold
CONSULTING

Appendix C-4
Additional Aquifer Parameter Determinations

This page intentionally left blank

Theis

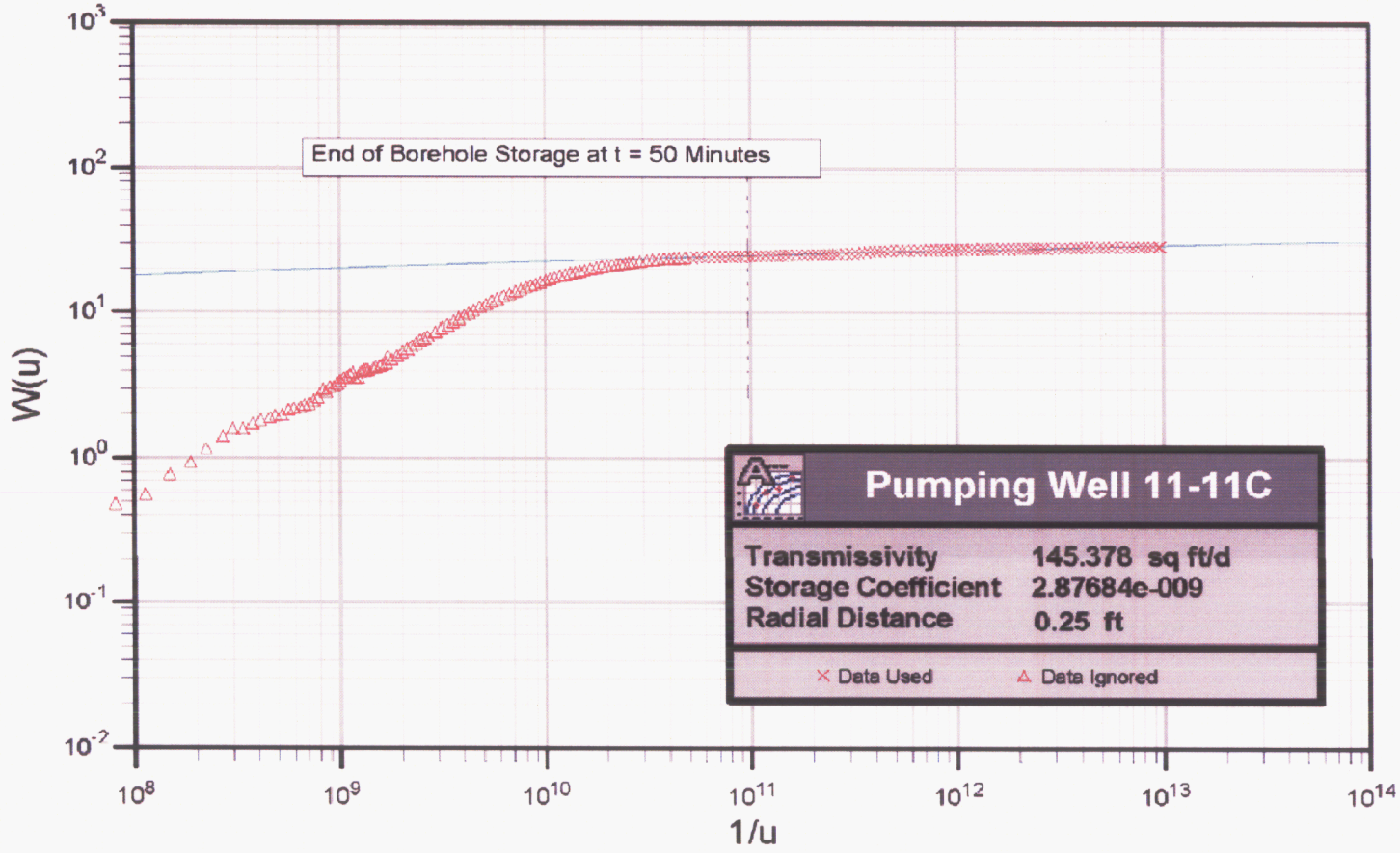

Client	Project	Title	
Knight Piésold CONSULTING	DEWEY-BURDOCK HYDROGEOLOGIC TESTING REPORT	Theis Drawdown Analysis at Burdock Pumping Well 11-11C	
	Project No: DV10200279.01	Date: 10/16/08	Appendix C, Figure C.4-1

G:\102\00279.01\A\Reports Specs\KP\All Reports\Work in Progress\Hydrogeologic Testing Report\Appendices\Appendix C\Appendix C.4-1 Theis 11-11C.xls 10/16/2008

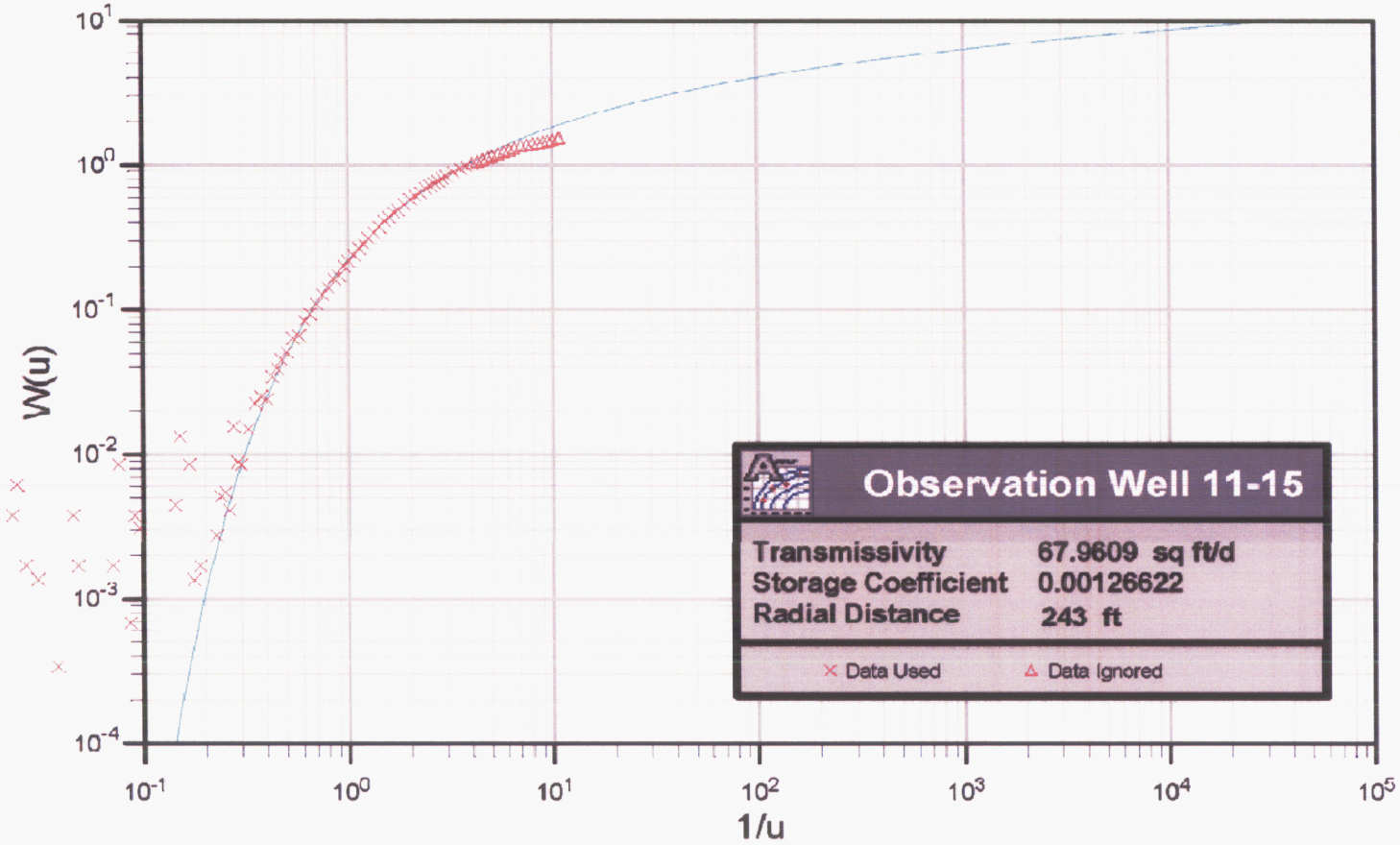

Client	Project	Title	
Knight Piésold CONSULTING	DEWEY-BURDOCK HYDROGEOLOGIC TESTING REPORT	Theis Drawdown Analysis at Burdock Observation Well 11-15	
	Project No: DV10200279.01	Date: 10/16/08	Appendix C, Figure C.4-2

G:\102\00279.01\A\Reports Specs\KP\All Reports\Work in Progress\Hydrogeologic Testing Report\Appendices\Appendix C\Appendix C.4-2 Theis 11-15.xls 10/16/2008

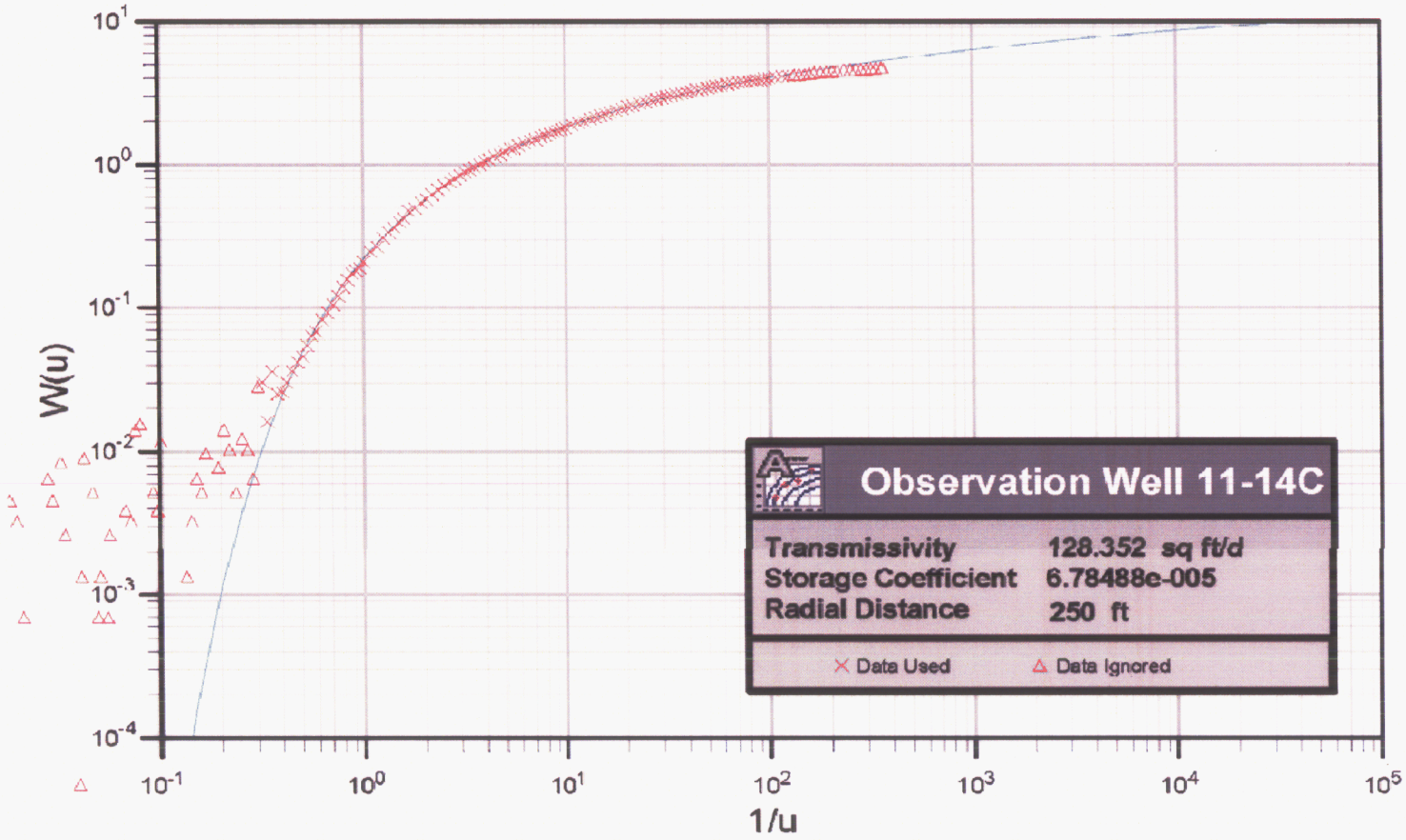

Client	Project	Title	
Knight Piésold CONSULTING	DEWEY-BURDOCK HYDROGEOLOGIC TESTING REPORT	Theis Drawdown Analysis at Burdock Observation Well 11-14C	
	Project No: DV10200279.01	Date: 10/16/08	Appendix C, Figure C.4-3

G:\102\00279.01\A\Reports Specs\KP\All Reports\Work in Progress\Hydrogeologic Testing Report\Appendices\Appendix C\Appendix C.4-3 Theis 11-14C.xls 10/16/2008

Theis Recovery

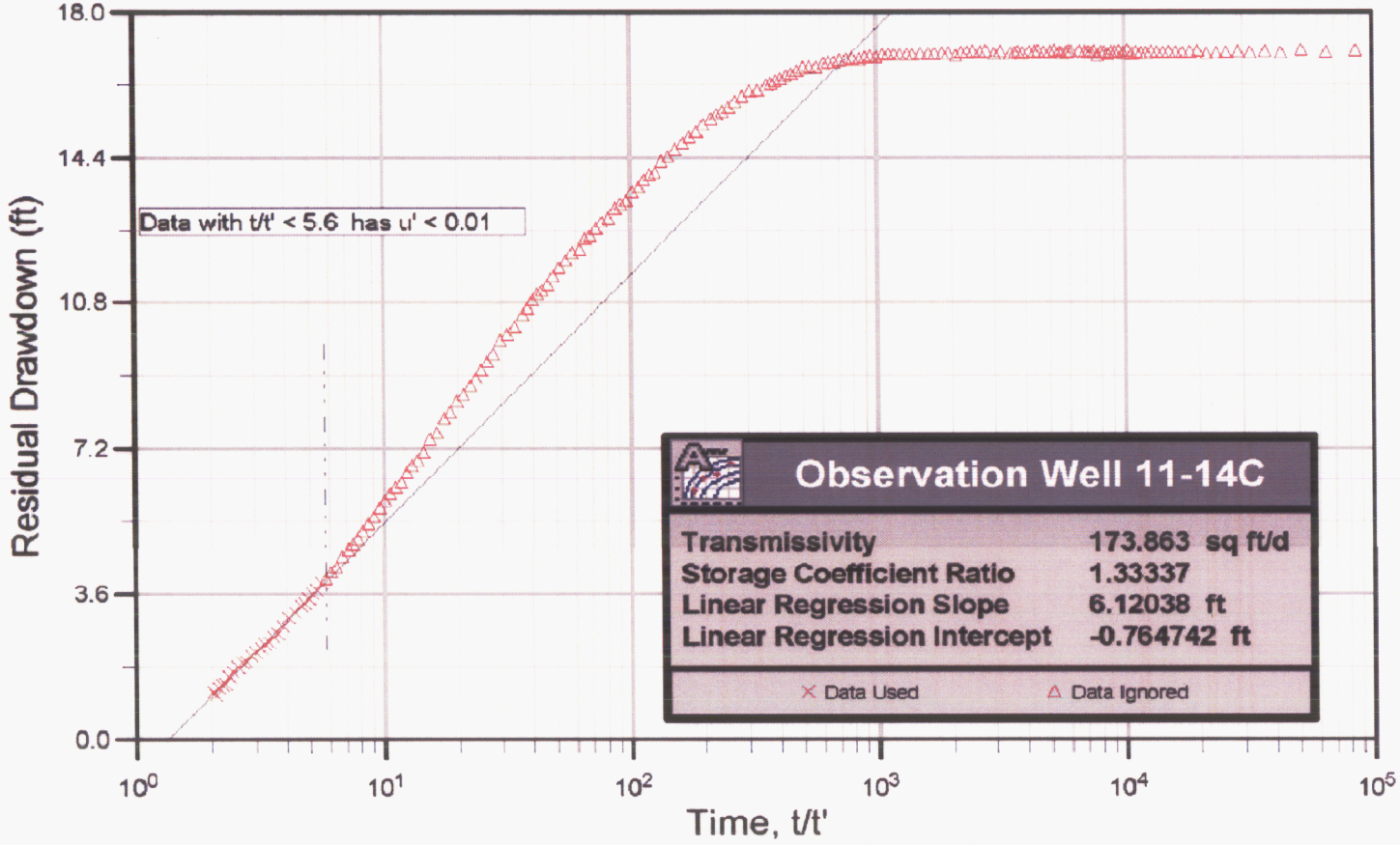

Client	Project	Title	
Knight Piésold CONSULTING	DEWEY-BURDOCK HYDROGEOLOGIC TESTING REPORT	Theis Recovery Analysis at Burdock Observation Well 11-14C	
	Project No: DV10200279.01	Date: 10/16/08	Appendix C, Figure C.4-4

G:\102\00279.01\A\Reports Specs\KP\All Reports\Work in Progress\Hydrogeologic Testing Report\Appendices\Appendix C\Appendix C.4-4 Theis Recov 11-14c.xls 10/16/2008

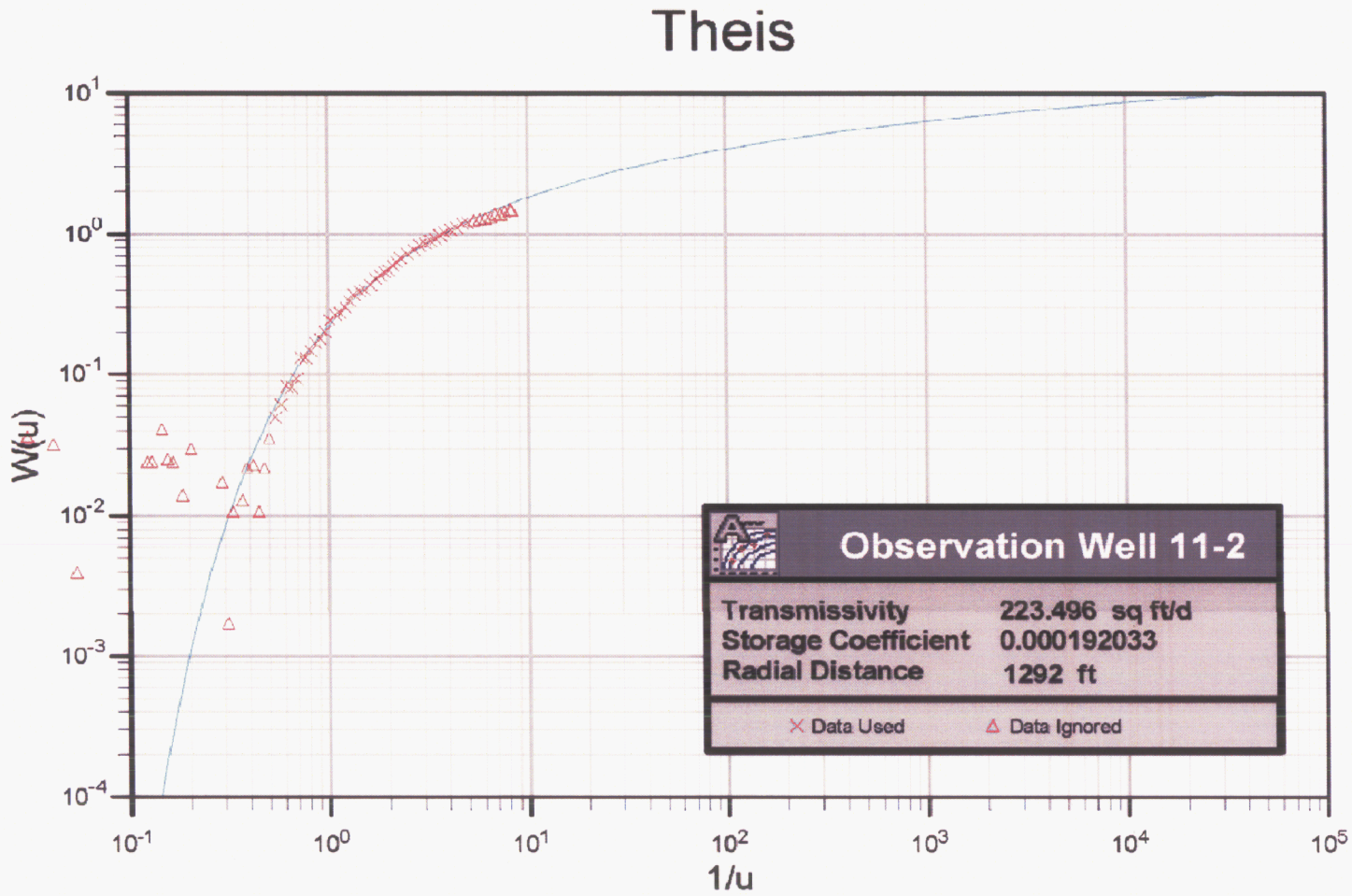

Client	Project	Title	
Knight Piésold CONSULTING	DEWEY-BURDOCK HYDROGEOLOGIC TESTING REPORT	Theis Drawdown Analysis at Burdock Observation Well 11-2	
	Project No: DV10200279.01	Date: 10/16/08	Appendix C, Figure C.4-5

G:\102\00279.01\A\Reports Specs\KP\All Reports\Work in Progress\Hydrogeologic Testing Report\Appendices\Appendix C\Appendix C.4-5 Theis 11-2.xls 10/16/2008

Hantush and Jacob (1955)

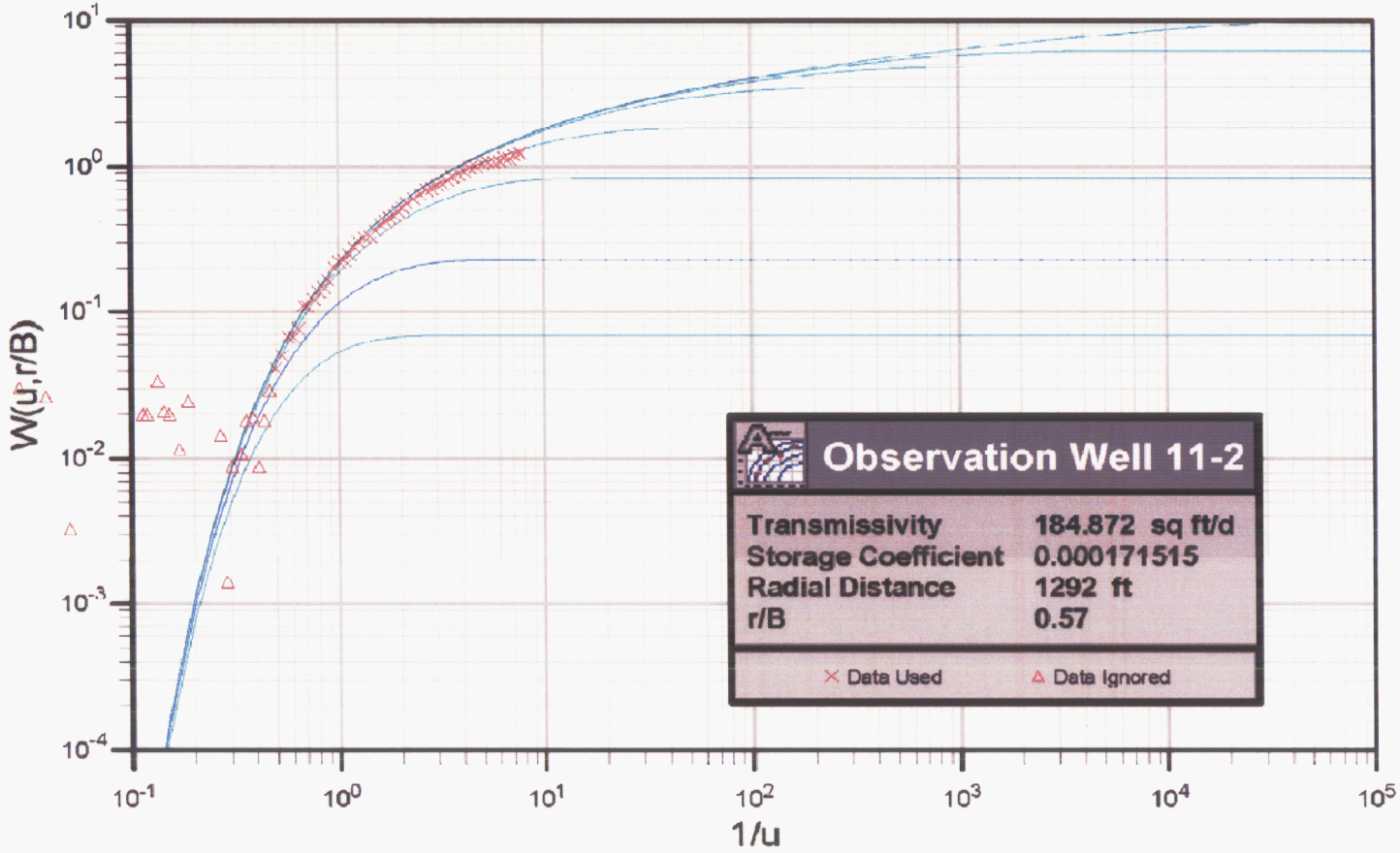

Client	Project	Title	
Knight Piésold CONSULTING	DEWEY-BURDOCK HYDROGEOLOGIC TESTING REPORT	Hantush-Jacob Leaky Confined Aquifer Analysis at Burdock Observation Well 11-2	
	Project No: DV10200279.01	Date: 10/16/08	Appendix C, Figure C.4-6

G:\102\00279.01\A\Reports Specs\KP\All Reports\Work in Progress\Hydrogeologic Testing Report\Appendices\Appendix C\Appendix C.4-6 HJ 11-2.xls 10/16/2008

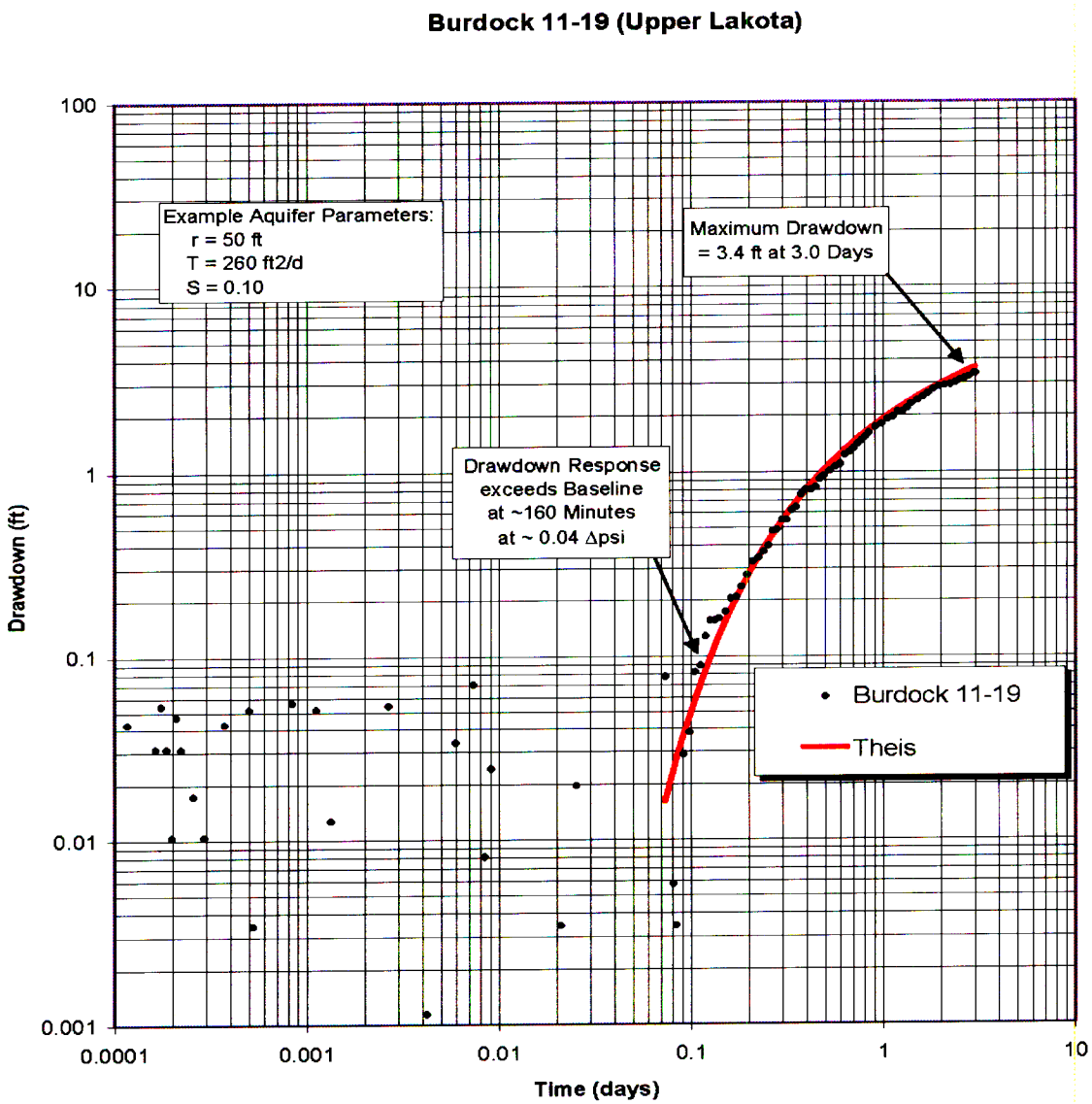

Client	Project	Title
Knight Piésold CONSULTING	DEWEY-BURDOCK HYDROGEOLOGIC TESTING REPORT	Drawdown and Analysis at Burdock Test Observation Well 11-19 (Upper Lakota)
	Project No: DV10200279.01	Date: 10/16/08 — Appendix C, Figure C.4-7

G:\102\00279.01\A\Reports Specs\KP\All Reports\Work in Progress\Hydrogeologic Testing Report\Appendices\Appendix C\Appendix C.4-7 KP Theis 11-19.xls 10/16/2008

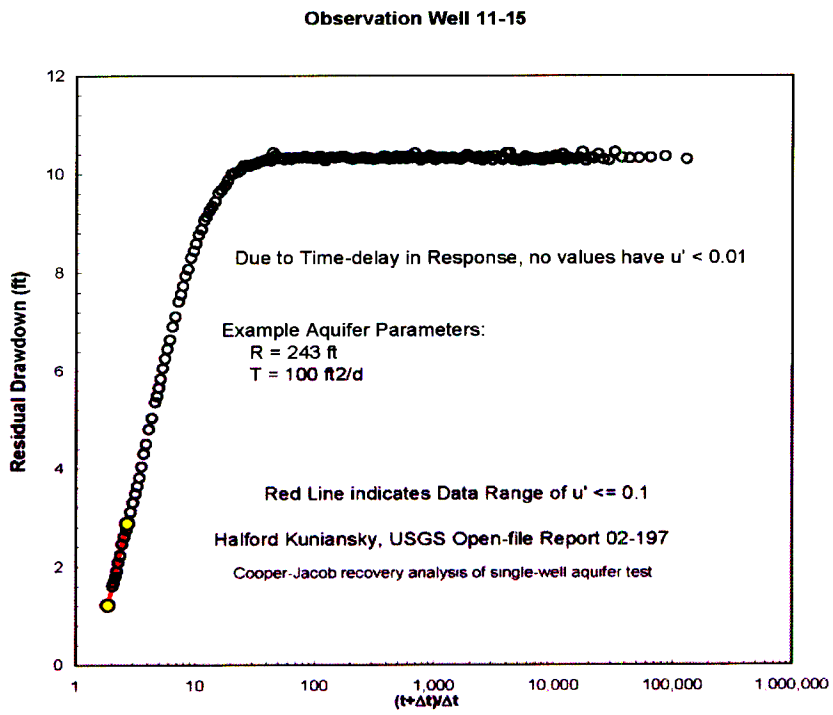

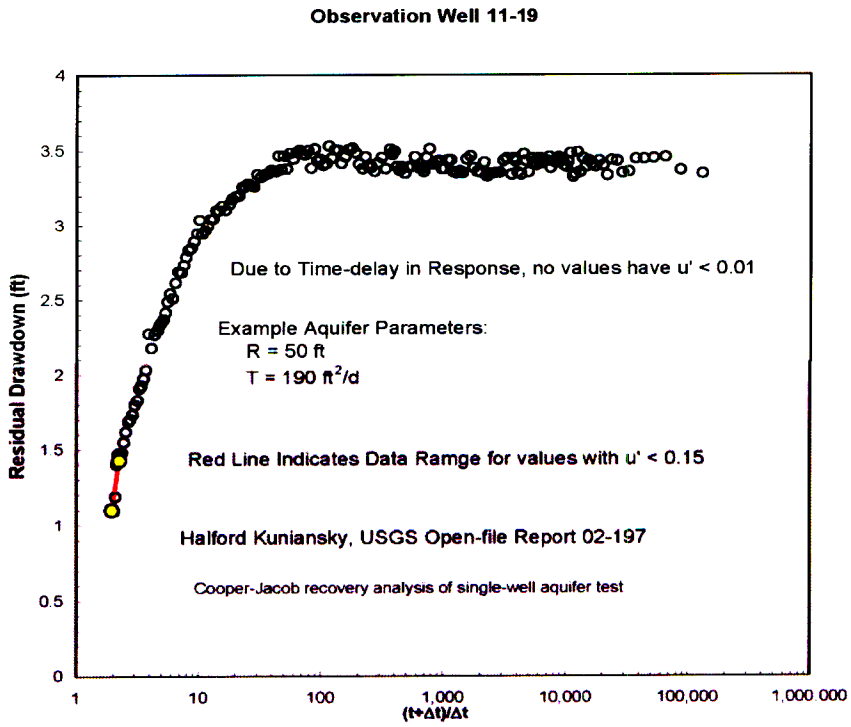

Client	Project	Title	
Knight Piésold CONSULTING	DEWEY-BURDOCK HYDROGEOLOGIC TESTING REPORT	Theis-Cooper-Jacob Recovery Analyses at Burdock Observation Wells 11-15 and 11-19	
	Project No: DV10200279.01	Date: 10/16/08	Appendix C, Figure C.4-8

G:\102\00279.01\A\Reports Specs\KP\All Reports\Work in Progress\Hydrogeologic Testing Report\Appendices\Appendix C\AppendixC.4-8 KP TR 11-15, 11-19.xls 10/16/2008

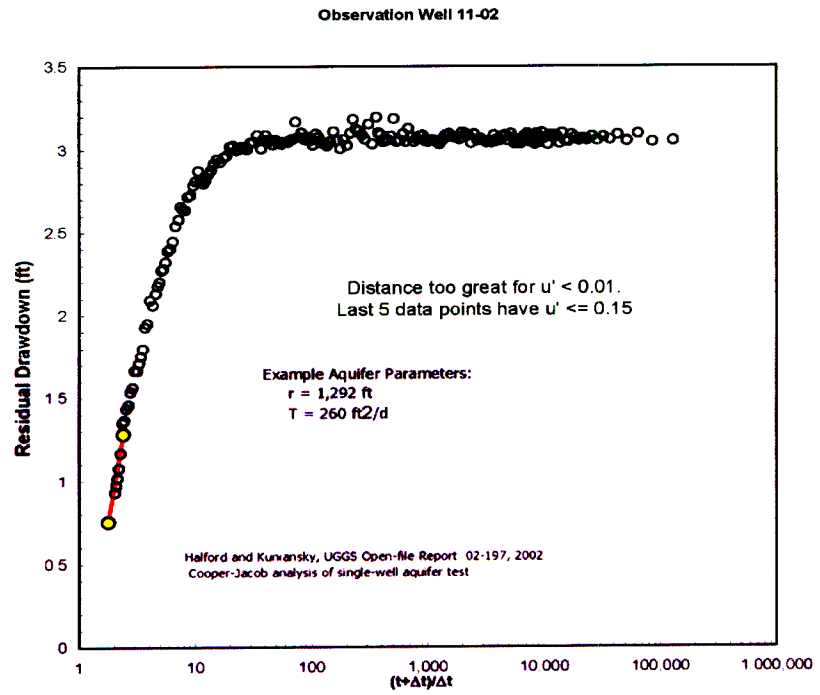

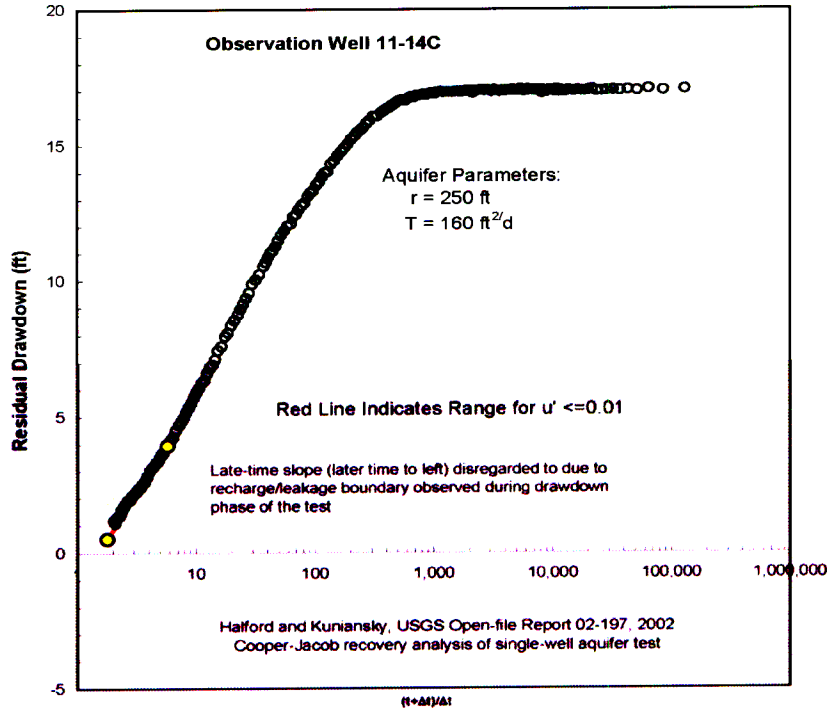

Client	Project	Title	
Knight Piésold CONSULTING	DEWEY-BURDOCK HYDROGEOLOGIC TESTING REPORT	Theis-Cooper-Jacob Recovery at Burdock Observation Wells 11-14C and 11-02	
	Project No: DV10200279.01	Date: 10/16/08	Appendix C, Figure C.4-9

G:\102\00279.01\A\Reports Specs\KP\All Reports\Work in Progress\Hydrogeologic Testing Report\Appendices\Appendix C\Appendix C.4-9 KP TR 11-14C, 11-2.xls 10/16/2008

This page intentionally left blank

Knight Piésold
CONSULTING

Appendix D
Laboratory Core Data

This page intentionally left blank

Core Lab
PETROLEUM SERVICES

CONVENTIONAL PLUG ANALYSIS

Powertech USA Inc.

Various samples

CL File Number: HOU-070985

Date: January 25, 2008

This report is based entirely upon the core samples, soils, solids, liquids, or gases, together with related observational data, provided solely by the client. The conclusions, inferences, deductions and opinions rendered herein reflect the examination, study, and testing of these items, and represent the best judgement of Core Laboratories. Any reliance on the information contained herein concerning the profitability or productivity of any well, sand, or drilling activity is at the sole risk of the client, and Core Laboratories, neither extends nor makes any warranty or representation whatsoever with respect to same. This report has been prepared for the exclusive and confidential use of the client and no other party.

CONVENTIONAL PLUG ANALYSIS PROTOCOL

Sample Preparation
1.0" diameter plugs were drilled with liquid nitrogen and trimmed into right cylinders with a diamond-blade trim saw. The samples were encapsulated in Teflon tape and stainless steel screens. All sample trims were archived.

Core Extraction
Samples soaked in methanol to remove any salt present.

Sample Drying
Samples were humidity oven dried at 140° F and 40% relative humidity to weight equilibrium.

Porosity
Porosity was determined using Boyle's Law technique by measuring grain volume at ambient conditions & pore volume at indicated net confining stresses (NCS)

Grain Density
Grain density values were calculated by direct measurement of grain volume and weight on dried plug samples. Grain volume was measured by Boyle's Law technique.

Permeability
Permeability to air was measured on each sample using steady-state method at indicated NCS.

PowerTech USA
Various samples

Start Date: 10-19-07
File No: HOU-070985

Core Lab
PETROLEUM SERVICES

Core Sample Log (Updated 01-25-08)

Smpl No.	Depth (ft)	Plug Quality				Vert	Smpl Len	Smpl Dia	End Trims	Remarks	Material Weights	
		Good	Fair	Poor	Failed						Teflon	Screens
1H	252.20		x				1.33	1.00		DB 07-11-11C	0.717	0.611
1V	252.35			x		x	0.67	1.00		DB 07-11-11C	0.465	0.651
2H	480.70	x					1.75	1.00		DB 07-29-1C	1.044	0.596
2V	480.80			x		x	1.00	1.00		DB 07-29-1C	0.805	0.604
3H	609.10	x					2.20	1.00		DB 07-29-1C	1.328	0.601
3V	609.20					x	1.88	1.00		DB 07-29-1C	1.220	0.605
4H	412.30	x					2.33	1.00		DB 07-11-11C	1.505	0.599
4V	412.45		x			x	1.66	1.00		DB 07-11-11C	1.325	0.602
5H	423.60	x					2.00	1.00		DB 07-11-14C	0.812	0.729
5V	423.35	x				x	1.80	1.00		DB 07-11-14C	0.552	0.734
6H	430.20		x				0.70	1.00		DB 07-11-14C	0.410	0.737
6V	430.35	x				x	1.50	1.00		DB 07-11-14C	0.594	0.752
7H	453.50	x					1.70	1.00		DB 07-11-14C	0.625	0.744
7V	453.45		x			x	0.75	1.00		DB 07-11-14C	0.315	0.719
8H	420.40	x					1.25	1.00		DB 07-11-16C	0.471	0.743
8V	420.10	x				x	1.90	1.00		DB 07-11-16C	0.717	0.732
9H	455.90	x					1.25	1.00		DB 07-11-16C	0.575	0.718
9V	455.45	x				x	1.50	1.00		DB 07-11-16C	0.634	0.719
10H	503.30	x					1.50	1.00		DB 07-11-16C	0.557	0.733
10V	503.45				x	x	-	1.00		DB 07-11-16C		
11H	573.25	x					1.25	1.00		DB 07-32-4C	0.567	0.730
11V	573.40	x				x	1.00	1.00		DB 07-32-4C	0.572	0.722
Totals		14	4	2	1	11						

10695
3/3/2008

Analyst: AM

Sample ID	Powertech ID	As Received sample mass (kg)	starting volume (mL)	ending volume (mL)	density (g/mL)	description	time in graduated cylinder (min)
51719-75	DB07-11-11C 425'5" to 427'4"	3.92	1395	3140	2.25	mushy sand	5
51719-25	DB07-29-1C 590' to 592'3"	4.32	1995	3880	2.29	mushy sand	5
51660-24	CN-3C 130-131	1.40	2100	2855	1.85	solid sand	40
51660-60	IN-2C 464-465	1.58	1300	2045	2.12	mushy sand	5
51660-59	IN-1C 464-465	1.02	1250	1750	2.04	clumped, wet sand	5
51719-86	DB07-32-2C 580 - 580.5	0.84	1705	2170	1.81	clumped, wet sand	30
51719-2	DB07-32-4C 550'0" to 551'1"	2.30	1015	1925	2.53	clumped, wet sand	180
51719-35	DB07-11-16C 412'1" to 414'3"	3.30	2100	3565	2.25	clumped, wet sand	960
51719-62	DB07-11-14C 11/1/07 436'7" to 438'7"	3.18	1990	3430	2.21	clumped, wet sand	30

Avg of 7 = 2.24

Powertech USA Inc.
Various samples

CL File No.: HOU-070985
Date: January 25, 2008
Analyst(s): MS,MM,JH

Core Lab

CONVENTIONAL PLUG ANALYSIS

Sample Number	Depth (ft)	Net Confining Stress (psig)	Porosity (%)	Kair (mD)	Grain Density (g/cm3)	Footnote
1H	252.20	600	10.50	1.04	2.356	
1V	252.35	600	10.15	.228	2.356	
4H	412.30	600	9.68	.041	2.511	
4V	412.45	600	9.59	.015	2.514	
DB 07-29-1C						
2H	480.70	600	8.90	.078	2.613	
2V	480.80	600	9.30	.007	2.610	
3H	609.10	600	12.26	.073	2.603	
3V	609.20	600	10.84	.008	2.793	
DB 07-11-14C						
5H	423.60	600	29.56	3207	2.645	
5V	423.35	600	30.34	1464	2.645	
6H	430.20	600	31.90	4161	2.640	
6V	430.35	600	30.16	939	2.646	
7H	453.50	600	10.86	1.00	2.519	
7V	453.45	600	11.82	.043	2.543	
DB 07-11-16C						
8H	420.40	600	30.50	2697	2.643	
8V	420.10	600	30.17	1750	2.651	
9H	455.90	600	6.99	.004	2.536	
9V	455.45	600	7.65	.012	2.556	
10H	503.30	600	12.96	.697	2.474	
10V	503.45	600				(6)
DB 07-32-4C						
11H	573.25	600	29.15	2802	2.641	
11V	573.40	600	29.04	619	2.645	

Footnotes :

(6) : Denotes all plug attempts failed.

Core Analyses for Powertach USA Inc. at Dewey-Burdock Site

Sample Number	Depth (ft)	Confining Stress (psig)	Porosity (%)	Air Intrinsic Permeability[1] k_a (mD)	Particle Density (g/cm^3)	Notes
DB 07-11-11C						
1H	252.20	600	10.50	1.040	2.356	Fuson Shale
1V	252.35	600	10.15	0.228	2.356	Fuson Shale
4H	412.30	600	9.68	0.041	2.511	Fuson Shale
4V	412.45	600	9.59	0.015	2.514	Fuson Shale
DB 07-29-1C						
2H	480.70	600	8.90	0.078	2.613	Skull Creek shale
2V	480.80	600	9.30	0.007	2.610	Skull Creek shale
3H	609.10	600	12.26	0.073	2.603	Fuson Shale
3V	609.10	600	10.84	0.008	2.793	Fuson Shale
DB 07-11-14C						
5H	423.60	600	29.56	3,207	2.645	
5V	423.35	600	30.34	1,464	2.645	
6H	430.20	600	31.90	4,161	2.640	
6V	430.35	600	30.16	939	2.646	
7H	453.50	600	10.86	1.000	2.519	Morrison Shale
7V	453.45	600	11.82	0.043	2.543	Morrison Shale
DB-07-11-16C						
8H	420.40	600	30.50	2,697	2.643	
8V	420.10	600	30.17	1,750	2.651	
9H	455.90	600	6.99	0.004	2.536	Morrison Shale
9V	455.45	600	7.65	0.012	2.556	Morrison Shale
10H	503.30	600	12.96	0.697	2.474	Morrison Shale
10V	503.45	600	No data			
DB 07-32-4C						
11H	573.25	600	29.15	2,802	2.641	
11V	573.40	600	29.04	619	2.645	

(1) Assumed air temperature = 70°F.
(2) Assumed water temperature = 52.8°F, water density = 0.999548 g/cm^3, and water dynamic viscosity = 0.0125
(3) $K_w = k_a \times (\rho_w g/\mu_w)$, and 1.0 mD = 0.987×10^{-11} cm^2 (See Constants Tab).

Hole No	mDarcy horizontal perm	verical perm	ratio h/v	% horizontal porosity	verical porosity
DB 07-11-14C	3207	1464	2.2:1	29.56	30.34
	4161	939	4.4:1	31.9	30.16
DB 07-11-16C	2697	1750	1.5:1	30.5	30.17
DB 07-32-4C	2802	619	4.5:1	29.15	29.04
Avg	3217	1193	2.7:1	30.3	29.9

This page intentionally left blank

Knight Piésold
CONSULTING

Appendix E
CD-ROM: Raw Pressure Transducer Data in WinSitu™ Format