HDR Engineering, Inc.

South Dakota Dept. of Environmental Natural Resources

Gilt Edge Mine Superfund Site SCADA Improvements RFP

Construction Documents
Project Manual

October 13, 2014

HDR Project No. 135-225557

Table of Contents

STATE SPECIFICATION: HEAD SECTIONS AND GENERAL CONDITIONS

00001	INDEX
00002	INVITATION TO BID
00003	BIDDER'S CHECKLIST
00004	ASBESTOS CONTAINING MATERIALS STATEMENT
00005	INSTRUCTIONS TO BIDDERS
00005A	BID FORM AND/OR EXPLANATION OF ALTERNATES
00005A-1	FACSIMILE MODIFICATION TO BID FORM
00005B	FORMAT FOR SEALED ENVELOPE
00005C	BID BOND
00005D	PERFORMANCE & PAYMENT BOND WITH ACKNOWLEDGMENT OF SURETY
00005E	NON-RESIDENT BIDDER AFFIDAVIT
00005F	CONTRACTOR'S STATEMENT OF SKILLS & CAPABILITIES
00005G	RESIDENT AND NON-RESIDENT SUBCONTRACTOR BREAKOUT
00006	AGREEMENT FOR CONSTRUCTION
00007	GENERAL CONDITIONS AND INDEX

DIVISION 01 - GENERAL REQUIREMENTS

01010	SUMMARY OF WORK
01060	SPECIAL CONDITIONS
01340	SUBMITTALS
01601	JOB CONDITIONS

DIVISION 13 - SPECIAL CONSTRUCTION

13440	INSTRUMENTATION FOR PROCESS CONTROL: BASIC REQUIREMENTS
13441	CONTROL LOOP DESCRIPTIONS
13446	CONTROL AUXILIARIES
13447	TELEMETRY SYSTEMS
13448	CONTROL PANELS AND ENCLOSURES
13449	SURGE PROTECTION DEVICES (SPD) FOR INSTRUMENTATION AND CONTROL EQUIPMENT
13500	PROGRAMMABLE LOGIC CONTROLLER (PLC) CONTROL SYSTEM
13500A	PCL-100 INPUTS AND OUTPUTS SPREADSHEET
13500B	AUTODIALER SPREADSHEET
13502	COMPUTER NETWORK AND HUMAN MACHINE INTERFACE (HMI) HARDWARE
13504	CONFIGURATION REQUIREMENTS: HUMAN MACHINE INTERFACE (HMI) AND REPORTS

INDEX

FOR

STATE SPECIFICATION

HEAD SECTIONS, GENERAL CONDITIONS, SPECIAL CONDITIONS, TECHNICAL SPECIFICATIONS AND PLANS

1 .....INDEX

2 .....INVITATION TO BID

3 .....BIDDER'S CHECKLIST

4 .....ASBESTOS CONTAINING MATERIALS STATEMENT

5 .....INSTRUCTIONS TO BIDDERS

A .....BID FORM AND/OR EXPLANATION OF ALTERNATES

A-1.....FACSIMILE MODIFICATION TO BID FORM

B .....FORMAT FOR SEALED ENVELOPE

C .....BID BOND

D .....PERFORMANCE & PAYMENT BOND WITH ACKNOWLEDGMENT OF SURETY

E .....NON-RESIDENT BIDDER AFFIDAVIT

F.....CONTRACTOR'S STATEMENT OF SKILLS & CAPABILITIES

G.....RESIDENT SUBCONTRACTOR CERTIFICATION

6 .....AGREEMENT FOR CONSTRUCTION

7 .....GENERAL CONDITIONS AND INDEX

8 .....SPECIAL CONDITIONS AND INDEX

9 .....TECHNICAL SPECIFICATIONS AND INDEX

10 .....PLAN INDEX

INVITATION TO BID

Invitation To Bid

The attached invitation to bid is to solicit sealed priced proposals (bids). Such proposals will be received by the State Engineer on behalf of the Department of Environment and Natural Resources at the Office of the State Engineer, Joe Foss Building, 523 East Capitol, Pierre, SD 57501-3182 until 3:30 PM CT June 30, 2015 for labor and materials for Gilt Edge Mine Superfund Site SCADA Improvements RFP, Department of Environment and Natural Resources, OSE# M2315--05X.

Bids will be received for the proposed work consisting primarily of software, programming for remote operation as described in the attached document and specifications, a new HMI at the Water Treatment Plant, portable HMI for remote monitoring and operation, and specified backpanels (complete with components installed and tested prior to delivery) to be installed into panels, along with communication and miscellaneous items described in the attached document.

Contractors Please Note: There will be a mandatory on-site pre-bid meeting on June 25, 2015 at 12:30 PM MT at the Gilt Edge Mine Superfund Site office located at the end of Gilt Edge Road, Deadwood SD 57732 (Take Gilt Edge Road off of Hwy 385 for 2 miles to site office). Each contractor shall be held to have examined the premises at the pre-bid meeting and satisfied themselves as to the existing site conditions before submitting a priced proposal. Pre-bid meeting attendance is mandatory for contractors to be responsible and their bid to be considered.

Copies of the Plans and Specifications may be obtained by bidders at the Department of Environment and Natural Resources, telephone number 605.773.5868. Copies are on file for viewing purposes at the Office of the State Engineer, Joe Foss Building, 523 East Capitol Avenue, Pierre, SD 57501-3182. Anyone requesting, reviewing, or copying Plans and Specifications for this project (such individual is hereinafter referred to as "bidder") agrees that they are doing so for the sole purpose of submitting a bid on the project. In consideration of the State of South Dakota providing such Plans and Specifications for the purpose of preparing a bid, Bidder further agrees:

A. The Plans and Specifications are the sole property of the State;
B. Any copies of the Plans and Specifications obtained directly from the State will be returned to the Office of the State Engineer immediately after the State provides notice that bidder will not be awarded a contract, or thirty (30) days after the bid opening for the project, whichever occurs first;
C. Any copies of the Plans and Specifications made by the bidder will be destroyed immediately after the State provides notice that bidder will not be awarded a contract, or thirty (30) days after the bid opening for the project, whichever occurs first;
D. If bidder does not submit a bid, bidder will fulfill the requirements of B and C above on or before the date of the bid opening;
E. The Plans and Specifications are to be used only with respect to this project and are not to be used for any other project or purposes other than preparing a bid for this project;
F. The Plans and Specifications will not be disseminated to any person or entity for purposes other than obtaining pricing information without the express written approval of the state;
G. All information contained in the Plans and Specifications is confidential; and
H. Should the bidder disseminate the Plans and Specifications to an individual or entity for purposes of obtaining pricing information, the bidder will require that individual or entity to adhere to the terms set forth herein. The bidder, however, assumes no liability for the misuse of the Plans and Specifications by such third party or such third party's failure to comply with the provisions contained herein.

Should bidder be awarded a contract for construction of the project, bidder does not need to return or destroy Plans and Specifications until after completion of the project.

Each bid in excess of $50,000.00 must be accompanied by a certified check, cashier's check or draft in the amount of 5% of the base bid and all add alternates and drawn on a State or National Bank or a 10% bid bond issued by a surety authorized to do business in the State of South Dakota and made payable to the Department of Environment and Natural Resources of the State of South Dakota.

The Department of Environment and Natural Resources reserves the right to reject any or all bids and to waive any irregularities therein.

KRISTI HONEYWELL, P.E.
State Engineer
Office of the State Engineer

Published at the total approximate cost of _____.

BIDDER'S CHECKLIST

The following items need to be submitted along with your bid. All bids and any modifications to bids must be in the hands of the State Engineer or the State Engineer's representative on or before the time set for opening bids in the Invitation for Bids.

- ☐ All blanks on the Bid Form are filled in.
- ☐ Receipt of all addenda is noted on the Bid Form.
- ☐ Bid Form is signed by an officer of the corporation or, if not a corporation, a proprietor or partner.
- ☐ For bids of $50,000.00 or higher, a bid bond or security is submitted with the bid.
- ☐ If a foreign contractor, a fully executed "Non-Resident Bidder Affidavit" is submitted with the bid.
- ☐ The bid, bid bond or security, and "Non-Resident Bidder Affidavit" are placed in a sealed envelope labeled in accordance with Paragraph 2 of the "Instructions to Bidders."

ASBESTOS STATEMENT

ASBESTOS CONTAINING MATERIALS CAUTION:

It is brought to the contractor's attention that asbestos containing materials (greater than 1%) may be present outside the project requirements yet within the building or area. The contractor shall take the necessary precautions so as not to disturb this material. If asbestos containing materials are disturbed, the contractor shall follow and comply with the state rules promulgated under SDCL 34-44 pertaining to asbestos, and 29 CFR 1926.58, 40 CFR Part 61, 40 CFR Part 763 as in effect and the United States Environmental Protection Agency publication entitled "Guidance for Controlling Asbestos Containing Materials in Buildings" (EPA 560/5-85-024, June 1985).

ASBESTOS CONTAINING MATERIALS STATEMENT:

In accordance with the provisions of SDCL 34-44-8, all bidders and contractors are hereby notified that to the best knowledge of the owner or those representing him in any capacity, this project **does not** involve asbestos containing materials (greater than 1%). Bidders are further instructed that no asbestos containing materials are to be installed in this project.

The contractor is cautioned that hidden materials unknown to the owner and inaccessible for testing may be found during the demolition work of this project which may be asbestos containing materials. Proper procedures shall be followed upon discovery of these materials. The owner or those representing the owner in any capacity shall not be held responsible or liable for any injury or cost to any person resulting from handling of or proximity to such materials.

ASBESTOS LIABILITY STATEMENT

In accordance with amended SDCL 34-44, neither the owner, employees or agents of the owner, nor any other person may have any claim, right or action against the prime contractor for any asbestos related injury or damage arising from the activities of a certified asbestos abatement subcontractor. Unless exempt under applicable state and federal law, no asbestos abatement work may be performed except by a certified asbestos contractor. A certified asbestos abatement subcontractor shall hold the owner and general contractor harmless from any liability arising from such subcontractor's activities on the project. A certified asbestos abatement contractor shall cause the owner and, if acting as a subcontractor, the general contractor to be named as additional insureds and provide sufficient proof of insurance for purposes of this section.

INSTRUCTIONS TO BIDDERS

Instructions to Bidders

1. Examination of RFP and Site.

Bidders should carefully examine the site of the proposed work, subsurface conditions, the RFP, and the contract documents governing the project. The submission of bids is conclusive evidence that the bidder has investigated and is satisfied as to the conditions to be encountered; the character, quality, and scope of the proposed work; the quality and quantity of the materials to be furnished; and the requirements of the bid, the RFP, and the other Contract Documents.

2. Submission of Bids.

Each bid must:

a. Be submitted on the prescribed form (Exhibit "A"); all blank spaces for bid prices must be filled in, in ink or typewritten, in both words and figures;

b. Include any addenda issued during the time allowed for preparation of the bids the same as though it had been included in the original RFP; and

c. Be submitted in a sealed opaque envelope bearing on the outside the name of the bidder, his/her address, and the name of the project for which the bid is submitted. See Exhibit "B" attached hereto for Sample Format for envelope. If forwarded by mail, Federal Express, or other commercial courier, the sealed envelope containing the bid must be enclosed in another envelope addressed as specified on the bid form.

All bids and any modifications to bids must be in the hands of the State Engineer or the State Engineer's representative on or before the time set for opening bids in the Invitation for Bids.

Bids, which are not properly marked, may be disregarded. Bids will not be received after the time for bid opening.

3. Modification of Bids.

a. Bids may be modified by mail, telegraphic notice, or facsimile notice received at the place designated in the Invitation to Bid, not later than the time set for the opening of bids. Telegraphic or facsimile modification shall not reveal the bid price, but shall provide the addition or subtraction or the modification so that the final prices or terms will not be known to the public corporation until the sealed bid is opened (see Exhibit “A-1”, Facsimile Modification To Bid Form). Any telegraphic or facsimile modification may not be withdrawn after the time set for the opening of bids. Telegraphic modifications must be confirmed in writing by the successful bidder before award of the contract. No bid made shall be changed or altered by telephone. No oral changes, alterations or conditions will be accepted under any circumstance.

b. Bidders submitting a facsimile (FAX) modification need to keep in mind that the Office of State Engineer has only one FAX machine available to receive facsimile modifications. OSE cannot and does not guarantee that this one FAX machine will be available during the last few minutes before bid opening. It is common for multiple bidders to try to FAX last minute modifications at the same time,

tying up the machine. Bidders assume the risk that OSE will not receive last minute FAX modifications before the time set for the opening of bids. Pursuant to the requirements of SDCL §5-18A-6(6), OSE will not accept any FAX modification received in its offices after the time set for the opening of bids.

4. Contractor's Qualification Statement.

For bids of $100,000.00 or more, the low bidder, upon request, must submit to the Office of the State Engineer, within 48 hours of said request, Contractor's Statement of Skills and Capabilities (Exhibit "F") with their bids. The Contractor's Qualification Statement (AIA Document A305) or the AGC's Contractor Qualification Statement may be used provided it includes all the information required by the OSE document, minus the financial statement.

5. Bid Security.

Delete Requirement since bids are being solicited?

Each bid over $50,000.00 must be accompanied by a bid security as follows:

a. Certified Check, Cashier's Check or Draft.

A certified check, cashier's check or draft for five percent (5%) of the amount of the bid, including all add alternates, such check to be certified or issued by either a State or National Bank and payable to said public corporation or officer.

b. Bid Bond.

In lieu of a certified check as a bid guarantee, a bid bond of ten percent (10%) of the total amount of the bid, including all add alternates, may be furnished by the Contractor. See Exhibit "C" for Bid Bond form. Such bond to be issued by a surety authorized to do business in the State of South Dakota. Such bond shall be payable to said public corporation or officer as guaranty that such bidder will enter into a contract with said public corporation, its Board or officers thereof, in accordance with the terms of such letting and bid in case such bidder be awarded the contract.

No bidder shall be required to leave his/her certified check or other guaranty or bid bond posted for a longer period than thirty (30) days if the bid is not accepted. The certified check or other guaranty of the successful bidder shall be returned to him forthwith upon the execution of the contract and surety herein provided for.

6. Withdrawal of Bids.

Any bid may be withdrawn by letter or by telegraphic communications or in person before the time specified in the advertisement therefor. Withdrawal of a bid does not prejudice a bidder's right to submit a new bid within the time designated for the submission of bids. No bids may be withdrawn after the time designated in the Invitation to Bid for the opening of bids.

7. Request for Interpretation.

Any person who plans to submit a bid on the project may submit to the Owner a written request for an interpretation of any part of the RFP or Contract Documents. Requests for interpretations shall be made not less than ten (10) days prior to the opening of bids. Any interpretation will be in writing and furnished to each person receiving RFP for submitting a bid. The Owner will not be responsible for any other explanation or interpretation.

8. Or Equal Clause.

Whenever a material, article, or piece of equipment is identified on the Plans or in the Specifications by reference to manufacturers' or vendors' names, trade names, catalogue numbers, etc., it is intended merely to establish a standard; and any materials, article, or equipment of other manufacturers and vendors which will perform adequately the duties imposed by the general design will be considered equally acceptable provided the requirements of Article 6.3.4 of the General Conditions are met and the material, article, or equipment so proposed is, in the opinion of the Architect and State Engineer, of equal substance and functions.

9. Preference for South Dakota Products, Labor and Materials.

By virtue of statutory authority in SDCL § 5-18A-6(10) et seq. preference will be given to South Dakota products, labor and materials as provided by law.

10. Opening of Bids.

Bids will be received until the time for opening designated in the Invitation to Propose. All bids received within the designated time will be opened and read aloud at the time and place designated in the Invitation to Propose. Bidders and their authorized agents are invited to attend.

11. Relief from Mistake in Bid.

A bidder claiming a mistake in a bid must give the State written notice of the alleged mistake within five calendar days after the bids are opened, specifying in detail how the mistake occurred. Relief will only be granted for clerical or mathematical mistakes which can be documented to the satisfaction of the State Engineer.

12. Rejection of Bids.

Bids may be rejected if they show any alteration of form, additions not called for, conditional bids, incomplete bids, unexplained erasures, or irregularities of any kind. The State may waive any informality in the bids received. When bids are signed by an agent other than an authorized corporate officer or member of a partnership, a power of attorney must be filed with the bid. Otherwise, the bid will be rejected as irregular and unauthorized. If there is reason to believe that collusion among the bidders exists, any or all bids may be rejected. The State reserves the right to reject all bids if in the judgment of the State Engineer it is in the best interest of the State.

13. Award of Contract. Leave open for selection?

If the contract is awarded, it will be awarded to the responsible bidder submitting the lowest bid, subject to paragraph 16 below, which complies with the Invitation to Bid and with these instructions. The successful bidder will be notified within thirty (30) calendar days of the date bids are opened. Subsequent to notice of award, the successful bidder will be presented with a contract agreement. The contract will require the completion of work according to the RFP and the Contract Documents. Conditional bids will not be accepted.

Delete Requirement since bids are being solicited?

14. Responsibility.

The Owner may make such investigations as he/she deems necessary to determine the ability of the bidder to perform the work, and the bidder shall furnish to the Owner all such information and data for this purpose as the Owner may request. The Owner reserves the right to reject any bid if the evidence submitted by, or investigation of, such bidder fails to satisfy the Owner that such bidder is properly qualified to carry out the obligations of the contract and to complete the work contemplated therein.

15. Nonresident Bids.

Delete Requirement since bids are being solicited?

SDCL § 5-18A-26, provides that the Contract shall be let to the lowest responsible bidder; provided, however, a resident bidder may be allowed a preference on any such contract as against the bid of any bidder from any other State or foreign province which enforces or has a preference for resident bidders. The amount of the preference given to the resident bidder shall be equal to the preference in the other state.

16. Subcontractor Certification.

SDCL§ 5-18B-6, provides that prior to execution of a public improvement project a successful bidder shall certify on the prescribed form (Exhibit "G"):

(1) That no more than twenty-percent of the cost of labor included in the contract is being provided by nonresident subcontractors; or

(2) That more than twenty percent of the cost of labor included in the contract is being provided by nonresident subcontractors because resident contractors are not available and at competitive prices.

17. Method of Award.

Delete Lowest Price? Leave open for selection?

a. <u>Bid procedure involving only a base bid:</u>

If the base bid is within the amount of funds available to finance the construction contract, then contract award will be made to that responsible bidder submitting the low base bid. If the low bid exceeds the funds available to finance the construction, the State may negotiate with the low bidder to produce a bid amount within the availability of funds.

b. <u>Bid procedure involving a base bid and alternate bids:</u>

If the base bid is within the amount of funds available to finance the construction contract and the Owner wishes to accept alternate bids, then contract award will be made to that responsible bidder submitting the low combined bid, consisting of the base bid and any combination of add or deduct alternative bids found to be most advantageous to the Owner. Under this procedure, if the Owner wishes to make award on low base bid only, then contract award will be made to that responsible bidder submitting the low base bid. If the low bid exceeds the funds available to finance the construction, the State may negotiate with the low bidder to produce a bid amount within the availability of funds.

18. Execution of Agreement.

Within ten (10) calendar days after the proposed contract agreement is presented to the successful bidder for execution, the successful bidder must execute the contract documents and, *if the Contract is for more than $50,000.00*, provide a performance and labor and material payment bond.

19. Performance & Labor and Material Payment Bond.

If the Contract is for more than $50,000.00, provide a performance and labor and material payment bond produced by a South Dakota licensed insurance producer (agent) and issued by a South Dakota licensed surety in an amount not less than the amount of the awarded contract. The performance and labor and material payment bond Surety or Sureties shall meet all requirements of South Dakota Law.

This bond is to secure the faithful performance of the contract and the payment of those to whom the bidder may become legally indebted for labor, materials, tools, equipment, or services of any kind used or employed by the bidder in performing the work. The surety bond shall be on the form attached hereto as Exhibit "D". *(Failure on the part of the bidder to furnish such bond in the time stated shall be cause for consideration by the State of awarding the Contract to the second low bidder and the retention of the bid deposit.)*

Delete Lowest Price? Leave open for selection?

20. Power of Attorney.

Attorneys-in-fact who sign bid bonds or contract bonds must file with each bond a certified and effectively dated copy of their power of attorney.

21. Default.

The failure to execute the contract documents or to furnish bonds required by these instructions within ten (10) calendar days after the proposed contract agreement is presented for execution constitutes a default. In the event of a default, the State may award the contract to the next lowest bidder or may re-advertise for bids. The State may charge against the defaulting bidder the difference between the amount of the bid and the amount for which a contract for the work is subsequently executed plus the State's additional administrative cost necessitated by the bidder's failure to execute the Contract Documents, irrespective of whether the amount thus due exceeds the amount of the bid bond. If a more favorable bid is received by re-advertising, the defaulting bidder shall have no claim against the State for a refund.

22. Commencement of Work/Time of Completion.

Work shall be commenced with in ten (10) calendar days after written Notice to Proceed by the State Engineer and shall be substantially completed within ninety (90) calendar days.

23. Liquidated Damages.

See Article 10.3.4 of the General Conditions.

24. Applicable Laws and Regulations.

The bidder's attention is directed to the fact that all applicable South Dakota laws, and the rules and regulations of all authorities having jurisdiction over construction of the project shall apply to the contract throughout and they will be deemed to be included in the contract the same as though herein written out in full.

25. South Dakota Tax Information for Public Contracts.

Contractors performing public contracts in South Dakota may become responsible for two types of taxes: the excise tax upon realty improvement contracts and the sales/use tax upon materials.

All contractors must secure a license from the Department of Revenue before engaging in the construction activities in this State. Detailed information on tax requirements may be obtained from the Department of Revenue, Anderson Building, Pierre, South Dakota 57501. Telephone 605.773.3311.

26. Applicable Standards.

In addition to codes, Standards and Regulations referenced for compliance in the various sections of the Specifications, the work shall be in compliance with the following:

ANSI Z53.1 - 1971, and as revised
Safety color code for marking physical hazards.

ANSI A13.1 - 1975, and as revised
Scheme for the identification of piping systems.

ANSI C2, and as revised National Electrical Safety Code.

27. Affirmative Action Plan.

The State of South Dakota requires that all contractors, vendors, and suppliers, employing fifty or more persons, doing business with any State Agency, Department, or Institution, place on file a statement of Affirmative Action that said contractor, vendor, or supplier does not discriminate in its employment practices with regard to race, color, religion, sex or national origin.

No award of any contract with the State of South Dakota shall be executed or awarded and approved by the State for any service, supply, or commodity unless the successful bidder submits such statement.

Above statement may be submitted to the State Engineer with the contractor's bid, or prior to award of contract.

28. Procurement Law.

This project is subject to the provisions of SDCL § 5-18A and 5-18B et seq.

EXHIBIT “A”

BID FORM

BID FORM

Gilt Edge Mine Superfund Site SCADA Improvements
Near Lead, South Dakota
OSE# _____

Date: _____

To: State Engineer, Office of the State Engineer
Joe Foss Building
523 East Capitol
Pierre, South Dakota 57501

Phone: 605-773-3466
Fax: 605-773-5980

The undersigned, being familiar with the local conditions affecting the work, and with the RFP and Contract Documents, including the Invitation to Propose, Instructions to Bidders, Bid Form, Explanation of Alternates, Modification to Bid Form, Bid Bond Form, Performance and Payment Bond, Acknowledgment of Surety, Sample Certification of Surety, Non-Resident Bidder Affidavit, Form of Agreement for Construction, General Conditions, Special Conditions, Technical Specifications, Plans and Addenda which govern the purchase of material and labor and the awarding of contracts hereby proposes to do all the work and provide all the material and equipment which pertains to

Gilt Edge Mine Superfund Site SCADA Improvements

OSE#_____

as provided for in the RFP accompanying dated October 13, 2014, for the following:

BASE BID

Item No.	Item Description	Est. Units	Unit Price
1	All SCADA Improvements Described in the Contact Documents and Plans & Specifications	1	$
TOTAL BID			$

UNIT PRICES:
For changing quantities of work items from those indicated by the contract drawings upon written instruction from the Architect and State Engineer, the unit prices shall prevail.

The unit prices shall include all labor, materials, bailing, shoring removal, overhead, profit, insurance, etc., to cover the finished work of the several kinds called for. Changes shall be processed in accordance with Article 14 of the General Conditions.

The Owner also reserves the unrestricted privilege to reject any unit prices for additions to or deductions from the scheduled amount of work as given in the Bid, if the same are considered excessive or unreasonable, or to accept by including the same in the contract as unit prices applicable in the event of addition to or deduction from the work to be performed under the contract, any or all such unit

prices which may be considered fair or reasonable.

The above bid includes all applicable State and Municipal Sales and Use Taxes on materials, and State and Municipal Excise Taxes and all other State and Federal Taxes that would affect the amount of the bid. (See Instructions to Bidders-SD Sales and Use Tax Information for Public Contracts.)

In addition, any material furnished by the State for use in this project is subject to Use Tax and Excise Tax. The total taxable value of materials furnished by the State for this project is $0.00 .

A Performance and Payment Bond as required by General Conditions will not be required on contracts which do not exceed Fifty Thousand Dollars ($50,000). (See SDCL 5-21-1.1 as amended).

If discrepancies remain at the time of substantial completion, a value will be assigned to each of the discrepancies and two (2) times their estimated value will be retained from payment to the contractor until completed and accepted. (See SDCL 5-18-13 as amended).

Within ten (10) days after Contractor's receipt of the Agreement for Construction, the Contractor shall submit to the Office of the State Engineer, the executed Agreement for Construction, Performance and Payment Bond, Certificates of Insurance and Affirmative Action Plan (if applicable).

Work shall be commenced within ten (10) calendar days after written Notice to Proceed by the State Engineer and shall be substantially completed within 90 calendar days.

The undersigned acknowledges receipt of the following addenda to the drawings and/or specifications (give number and date of each):

Addenda Nos._____dated_____respectively.

The undersigned acknowledges that they have read and understand the Asbestos-Containing Materials Statement contained in the project manual.

Accompanying this proposal is a certified check, cashier's check or draft in the amount of 5% of the base bid and all add alternates, and drawn on a State or National Bank in the amount of $
or a 10% bid bond issued by a surety authorized to do business in the State of South Dakota, in the amount of $_____. *(Not applicable if Bid is under $50,000.)*

In submitting this bid, it is understood that the right is reserved by the Owner to reject any and all bids and to waive any irregularities. It is further understood by the Bidder that he may not withdraw his bid within 30 days after the actual opening thereof.

In submitting this bid, bidder asserts it has reviewed all provisions of the General Conditions including the provision for assessment of liquidated delay damages found in Article 10 of the General Conditions.

Bidder agrees that the damages anticipated by the Owner in the event of delay in completion of the project are uncertain in amount and difficult to prove; the amount stipulated in Article III of the Agreement for Construction is a reasonable amount in light of the anticipated loss and injury; and the Owner's actual damages in the event of delay would be impracticable or extremely difficult to fix. Bidder agrees to be bound by the liquidated damages set forth in Article III of the Agreement for Construction. Bidder further agrees that the liquidated amount stipulated in Article III of the Agreement for Construction is not a penalty.

BIDDER: _____
(Type Name of Firm)

BY: _____
(Signature of Firm's Representative)

_____
(Type Name and Title of Firm's Representative)

TELEPHONE NO. _____

FACSIMILE NO. _____

E-MAIL ADDRESS _____

BUSINESS ADDRESS _____

_____

STATE OF INCORPORATION _____

EXPLANATION OF BID ITEMS

Item No. 1 **General Conditions/Mobilization:** The lump sum unit price proposed shall be considered full payment for all mobilization costs, bonds, insurance requirements and completion of all SCADA improvements described in the RFP.

EXHIBIT "A-1"

FACSIMILE MODIFICATION TO BID FORM

FACSIMILE MODIFICATION
To Bid Form

South Dakota Department of Environment and Natural Resources
Gilt Edge Mine Superfund Site SCADA Automation Improvements
Pierre, South Dakota
OSE#

Date: _____

To: State Engineer, Office of the State Engineer
Joe Foss Building
523 East Capitol
Pierre, South Dakota 57501

Phone: 605-773-3466
Fax: 605-773-5980

Please make the following modifications to our bid on the referenced project. This modification is per the Instructions to Bidders Item #3 included in the original bid documents and modifies our sealed bid.

Note To Bidder: Please check the appropriate ADD/DEDUCT box.

UNIT PRICES MODIFICATION

Item No.	Item Description	Unit	Unit Price
Overall Site Work			
1	All SCADA Improvements Described in the Contact Documents and Plans & Specifications	1	$
TOTAL BASE BID MODIFICATION ADD ☐ DEDUCT ☐			$

The undersigned acknowledges receipt of the following addenda to the RFP (give number and date of each):

Addenda Nos._____dated_____respectively.

All SCADA Improvements
Described in the Contract
Documents and Plans & Specifications

In submitting this facsimile modification bid, it is understood that the right is reserved by the Owner to reject any and all bids and to waive any irregularities. It is further understood by the Bidder that he may not withdraw his Bid within 30 days after the actual opening thereof.

BIDDER: _____
(Type Name of Firm)

BY: _____
(Signature of Firm's Representative)

_____
(Type Name and Title of Firm's Representative)

TELEPHONE NO. _____

FACSIMILE NO. _____

E-MAIL ADDRESS _____

BUSINESS ADDRESS _____

_____

STATE OF INCORPORATION _____

EXHIBIT "B"

SAMPLE OF SEALED ENVELOPE

Return Address
John Smith, Contractor
Box 1
Anytown, USA

TO: State Engineer
(Insert Address for Delivery of Bid,
found in Bid Advertisement)
_____, South Dakota

Bid For: (Name of Project)
(Location)
(OSE#_____)

To Be Opened: (Hour & Date)
Addenda Received: Nos._____

EXHIBIT “C”

BID BOND

BID BOND

KNOW ALL MEN BY THESE PRESENTS, that we, the undersigned,_____

_____

as Principal, and _____

as Surety, are hereby held and firmly bound unto _____

as owner for the penal sum of_____of which, well and truly to be made, we hereby jointly and severally bind ourselves, our heirs, executors, administrators, successors and assigns.

Signed, this_____day of_____, 20 _.

The condition of the above obligation is such that whereas the Principal has submitted to _____a certain Bid, attached hereto and hereby made a part hereof to enter into a contract in writing for the _____

_____

_____

_____

_____

NOW, THEREFORE,

(a) If said Bid shall be rejected, or in the alternate

(b) If said Bid shall be accepted and the Principal shall execute and deliver a contract in the Form of Contract, attached hereto (properly completed in accordance with said bid) and shall furnish a bond for his faithful performance of said contract, and for the payment of all persons performing labor or furnishing materials in connection therewith, and shall in all other respects perform the agreement created by the acceptance of said Bid.

Then this obligation shall be void, otherwise the same shall remain in force and effect: it being expressly understood and agreed that the liability of the Surety for any and all claims hereunder shall, in no event, exceed the penal amount of this obligation as herein stated.

The Surety, for value received, hereby stipulates and agrees that the obligations of said Surety and its bond shall be in no way impaired or affected by any extensions of the time within which the Owner may accept such Bid; and said Surety does hereby waive notice of any such extension.

IN WITNESS WHEREOF, the Principal and the Surety have hereunto set their hands and seals, and such of them as are corporations have caused their corporate seals to be hereto affixed and these presents to be signed by their proper officers, the day and year
first set forth above.

_____(L.S.)
Principal

_____
Surety

SEAL By: _____

EXHIBIT "D"

PERFORMANCE AND PAYMENT BOND

PERFORMANCE AND PAYMENT BOND

Office of the State Engineer
523 East Capitol Avenue
Pierre, SD 57501
605.773.3466

KNOW ALL MEN BY THESE PRESENTS, THAT WE _____

_____

(Contractor)

hereinafter called "Principal", and _____

_____

(Surety)

a corporation, organized and existing under the laws of the State of_____, and duly authorized to transact business in the State of South Dakota, hereinafter called "Surety", are held and firmly bound unto the State of South Dakota, hereinafter called "Obligee", in the just and full sum of _____Dollars($_____) lawful money of the United States of America to be paid to the State of South Dakota, which payment to be made, we bind ourselves, our heirs, administrators, executors, successors and assigns, jointly and severally, firmly by these presents.

The condition of this obligation is such that:

WHEREAS, Principal has entered into the Contract with Obligee, dated this_____day of _____, 20____, for the construction of:

PROJECT NAME: _____

PROJECT LOCATION: _____

O.S.E. PROJECT NUMBER: _____

which Contract is herein referred to and made a part hereof as fully and to the same extent as if the same were entirely written herein; and

WHEREAS, it was one of the conditions of the award by Obligee of the Contract entered into that these presents should be executed.

PROVIDED, FURTHER, that the Surety, for consideration received, hereby stipulates and agrees that no change, extension of time, alteration or addition to the terms of the Contract, to work to be performed thereunder or to the specifications accompanying the Contract shall in any manner affect its obligation on this Bond. The Surety hereby does waive notice of any such change, extension of time, alteration or addition to the terms of the Contract, to the work or to the specifications.

PROVIDED, FURTHER, that no final settlement between the Owner and the Contractor shall abridge the right of any beneficiary hereunder whose claim may be unsatisfied.

NOW, THEREFORE, if the Principal in all respects complies with the terms and conditions of the Contract and his (their or its) obligations thereunder, including specifications therein referred to and made a part thereof and any alteration made in such specifications as herein or therein provided, then this obligation is void, but otherwise remains in full force and effect.

A further condition of this bond is that in the event the Principal fails to pay all just claims and demands on the part of any employee, person, firm or corporation for labor and materials furnished for or used in connection with the prosecution of the work under the Contract, or fails to pay any tax which may accrue to the State of South Dakota under the provisions of the "Use Tax Act of 1939 and The Excise Tax on Realty Improvements under SDCL 10-46A," and Sections 5-21-3 and 5-21-4 of the South Dakota Codified Laws, this bond and the sureties thereon shall be responsible to such person, firm or corporation and to the State of South Dakota for the full payment of the value of such labor and materials so furnished, including payment of South Dakota use taxes and excise taxes on realty improvements.

SIGNED AND SEALED THIS_____DAY OF_____, 20____.

INDIVIDUAL PRINCIPAL

By_____Typed Name
_____(Affix Seal if available)

PARTNERSHIP, CORPORATE, OR LLC PRINCIPAL

By_____Typed Name_____

Title_____ Business Name
_____(Affix Corporate Seal if available)
Address_____

INDIVIDUAL, PARTNERSHIP OR CORPORATE SURETY

By_____Typed Name_____

Title_____ Business Name
_____(Affix Corporate Seal if available)
Address_____

Surety's South Dakota License Number: _____

Attorney-In-Fact's Name: _____

Attorney-In-Fact's South Dakota License Number: _____

ACKNOWLEDGMENT OF PRINCIPAL
(Individual)

State of_____)
) ss
County of_____)

On this_____day of_____, 20_____, before me personally appeared_____, known to me to be the individual described in and who executed the foregoing instrument and acknowledged to me that he/she executed the same.

_____
Notary Public

My commission expires the_____day of_____, 20____.

ACKNOWLEDGMENT OF PRINCIPAL
(Partnership)

State of_____)
) ss
County of_____)

On this_____day of_____, 20____, before me personally appeared_____, who acknowledged himself/herself to be one of the partners of_____, a partnership, and that he/she, as such partner, being authorized so to do, executed the foregoing instrument for the purposes therein contained, by signing the name of the partnership by himself/herself as a partner.

_____
Notary Public

My commission expires the_____day of_____, 20____.

ACKNOWLEDGMENT OF PRINCIPAL
(Corporation)

State of_____)
) ss
County of_____)

On this_____day of_____, 20_____before me personally appeared_____, who acknowledged himself/herself to be the_____of_____, a corporation, and that he/she, as such_____being authorized so to do, executed the foregoing instrument for the purposes therein contained, by signing the name of the corporation by himself/herself as_____.

_____
Notary Public

My commission expires the_____day of_____, 20____.

ACKNOWLEDGMENT OF PRINCIPAL
(LLC)

State of_____)
) ss
County of_____)

On this_____day of_____, 20_____before me personally appeared_____, who acknowledged himself/herself to be the_____of_____, a limited liability company, and that he/she in such capacity, being authorized to do so, executed the foregoing instrument for the purposes therein contained, by signing the name of the limited liability company by himself/herself as_____.

_____
Notary Public

My commission expires the_____day of_____, 20____.

ACKNOWLEDGMENT OF SURETY
(Corporate Officer)

State of) _____
)ss
County of_____)

On this _ day of_____, 20 , before me, a Notary Public in and for said County, personally appeared_____personally known to me, who being by me duly sworn, did say that he/she aforesaid officer of the_____of_____, a corporation duly organized and existing under the laws of the State of_____, that the seal affixed to the foregoing instrument is the corporate seal of said corporation, that the said instrument was signed, sealed and executed in behalf of said corporation by authority of its Board of Directors, and further acknowledges that the said instrument and the execution thereof to be the voluntary act and deed of said corporation.

IN WITNESS WHEREOF, I have hereunto subscribed by name and affixed by official seal at _____, the day and year last above written.

_____
Notary Public

My commission expires the_____day of_____, 20_____.

ACKNOWLEDGMENT OF SURETY
(Attorney-In-Fact)

State of_____)
)ss
County of_____)

On this_____day of_____, 20____, before me personally appeared _____known to me or satisfactorily proven to the person whose name is subscribed as attorney in fact for_____and acknowledged that he/she executed the same as the act of his/her principal for the purpose therein contained.

IN WITNESS WHEREOF, I hereunto subscribed my name and affixed my official seal at _____, the day and year last above written.

_____
Notary Public

My commission expires the_____day of_____,20_____.

APPROVAL AS TO FORM

Approved as to form this_____day of_____, 20____.

_____
Assistant Attorney General

EXHIBIT "E"

NON-RESIDENT BIDDER AFFIDAVIT

NON-RESIDENT BIDDER AFFIDAVIT

Country of_____)
)ss
State or Province of_____)

Business Name: _____

Business Address: _____

Affiant's Name and Title: _____

Project Name and Location: ___

OSE Project Number: _____

AFFIDAVIT WHEN NO PREFERENCE IS GIVEN

I do hereby affirm that_____resides in the country of_____in the state or province of_____and that said country and/or state or province does not grant a preference to resident bidders for work on behalf of said country, state or province.

Dated:_____ Signed_____

AFFIDAVIT WHEN PREFERENCE IS GIVEN

I do hereby affirm that_____resides in the country of_____in the state or province of_____and that said country and/or state or province does grant a preference to resident bidders for work on behalf of said country, state, or province, the nature and extent of such preference being_____.

Dated:_____ Signed_____

ACKNOWLEDGEMENT OF AFFIANT

Country of_____)
) ss
State or Province of_____)

On this_____day of_____, 20_____, before me personally appeared_____, known to me to be the affiant who, being duly sworn, declares all statements made in this affidavit to be true and correct to the best of his or her knowledge.

_____
Notary Public

My commission expires the_____day of_____, 20____.

EXHIBIT “F”

CONTRACTOR’S STATEMENT OF SKILLS AND CAPABILITIES

STATE OF SOUTH DAKOTA
OFFICE OF THE STATE ENGINEER

Contractor's Statement of Skills and Capabilities

Send Completed Form to: Office of the State Engineer
523 East Capitol
Pierre, South Dakota 57501-3182
Phone: 605.773.3466 Fax: 605773.5980
OSE Web Page: http://www.state.sd.us/boa/ose

OSE Project:

Project Name: _____

Location: _____

OSE # _____

CONTRACTOR INFORMATION

A. Business Structure

Submitted By:

1. Current Business Name and Address.

Business Name:

Address:

Phone:

Fax:

email:

2. How many years has your company been in business under the name listed above?

3. Has your company been in business under any other business name(s)?
If so, list previous business name(s) and the years your company operated under each name:

4. If a corporation, provide the:

   Date and State of incorporation:
   Type of corporation:
   Names of Officers

   President:
   Vice-president(s):
   Secretary:
   Treasurer:

5. If a partnership, provide the:

   State of Organization:
   Partnership type:
   Date of organization:
   Names of partners:

6. If individual, provide:

   Date of organization:
   Name of owner:

7. Use this space to describe your company's business structure if it differs from those listed above:

8. List the states and trades in which you may legally do business where applicable. Provide registration or license number(s).

9. If your company is organized under the laws of another state, has it registered with the Secretary of State for the State of South Dakota and/or the Department of Revenue?

B. Background and History

1. What types of Work does your company perform with its own forces?

2. Has your company ever failed to complete Work it had contracted to perform? Provide details if the answer is “yes.”

3. Within the last five years, has any officer or principal of your company been an officer or principal of another company that failed to complete Work that the latter company contracted to perform? Provide details if “yes.”

4. List any and all judgments, claims, suits at law, or arbitration proceedings pending or outstanding against your company or its officers regarding any construction contracts:

5. Within the last five years, has your company filed law suits or requested arbitration regarding any construction contracts?

6. On separate paper, provide a list of major construction projects your company is currently working on. For purposes of this document “major construction projects” shall be considered anything of average size or greater for your company. Provide name of owner, location, architect, contract amount, and scheduled completion.

7. On separate paper, list the major construction projects your company has completed in the last five years. For purposes of this document “major construction projects” shall be considered anything of average size or greater for your company. Provide name of owner, project, location, architect, contract amount, and scheduled completion.

8. On separate paper, list the construction background/experience of the key personnel in your company.

9. What is the average annual value of all construction work your company performed within the last five years?

C. References

1. List your company’s Business/Industry References:

2. List your company's Financial References:

3. Provide the name and address of your company's Surety, as well as the name and address of the Agent:

SIGNATURE AND NOTARIZATION

Date_____

_____
Signature

(Affix Seal)

Typed Name: _____

Title: _____

Business Name: _____

Address: _____

_____

On this_____day of_____, 20_____, before me personally appeared _____, who, being duly sworn, declares all statements made in this Qualification Statement to be true and correct to the best of his or her knowledge.

_____
Notary Public

My commission expires the_____day of_____, 20_____

EXHIBIT "G"

RESIDENT AND NON-RESIDENT SUBCONTRACTOR BREAKOUT

Resident and Non-resident Subcontractor Breakout

Company:____Contract Amount: __________________

Date: ___________________________________

Re: Building/Site Name
Project Description
Campus
Location
OSE#

Resident Contractors

Company	Location	Labor Cost	% Value of Contract
	Total:		

Non- Resident Contractors

Company	Location	Labor Cost	% Value of Contract
	Total:		

As defined in 5-18A:

(26) "Resident," any person, partnership, association, limited liability company, foreign limited liability company, corporation, or foreign corporation licensed to do business within this state that has maintained a substantial and bona fide place of business and has conducted business from within this state for at least one year prior to the date on which a contract was awarded. The members of the partnership or association shall have been bona fide residents of the state for one year or more immediately prior to bidding upon the contract. A foreign corporation licensed pursuant to §§ 47-1A-1501 to 47-1A-1532, inclusive, is not a resident as defined by this section if the state or country in which it is organized enforces or has a preference for resident bidders;

If more than 20% of the labor cost included in the contract is being provided by nonresident subcontractors, please explain: _____

_____

_____

_____

_____

_____

AGREEMENT FOR CONSTRUCTION

PLANS AND SPECIFICATIONS PREPARED BY
(Architect, State Engineer, or Engineer)

PROJECT:

AGREEMENT FOR CONSTRUCTION
PRIME CONTRACT

THIS Agreement is made the day of , 20 by and between (the "Contractor") and the represented by its legal officers (the "Owner").

WITNESSETH, that the Contractor and the Owner for the consideration stated herein agree as follows:

ARTICLE I, CONTRACT DOCUMENTS:

The following documents and any other documents incorporated in them by reference constitute the contract documents:

1. This Agreement
2. The Project RFP Dated October 13, 2014
3. Addenda issued prior to execution of this Agreement
4. Contractor's Performance and Labor and Material Payment Bond

These documents constitute the entire and integrated agreement between the parties hereto and supersede prior negotiations, representations, or agreements, either written or oral. The Index for items 2 and 3 is attached hereto as Exhibit "A."

ARTICLE II, STATEMENT OF WORK:

To the extent not otherwise provided in the contract documents, contractor shall furnish and pay for all labor, tools, equipment, supplies, materials, appurtenances, utilities, charges, fees, permits, and all other construction accessories and services required to complete the work specified in the contract documents in strict compliance with the contract documents.

ARTICLE III, DATE OF COMMENCEMENT AND COMPLETION:

The work shall be commenced within ten (10) consecutive calendar days after the date of issuance of the Notice to Proceed by the Owner and shall be substantially completed within 156 calendar days, subject to adjustments of the contract time as provided in the contract documents. Notice to Proceed will not be issued until funding becomes available. Should the Contractor fail to substantially complete the work within the time set forth herein, or within such extra time as may have been allowed by increases in the contract, or by formally approved extensions granted by the Owner, the Contractor and the Contractor's surety shall be liable for and shall pay the Owner $ 500.00 per calendar day as liquidated damages for each calendar day of delay until the work is substantially complete

ARTICLE IV, CONTRACT SUM:

A. For the performance of the work specified in the Contract Documents, Owner will pay Contractor and Contractor will accept as full compensation the sum of , subject to additions or deductions as provided in the contract documents;

B. Contract sum includes the following alternates, if any, which are described in the Contract Documents and are hereby, accepted by the Owner:

C. Unit Prices, if any, are as follows:

Where the quantities originally contemplated are so changed that application of the agreed unit price to the quantity of work performed is shown to create a hardship to the Owner or the Contractor, there shall be an equitable adjustment of the contract to prevent such hardship.

ARTICLE V, PROGRESS PAYMENTS:

The Owner shall make progress payments on a monthly basis for work accomplished in accordance with General Conditions, Article 11.

ARTICLE VI, ACCEPTANCE AND FINAL PAYMENT:

Final payment less amounts withheld to cover the cost of nonconforming work, shall be made by the Owner in accordance with General Conditions Sub-Article 11.8.

ARTICLE VII, NOTICE:

All notices, demands and other communications required by the Contract Documents shall be in writing and shall be deemed to have been duly given if personally delivered, mailed first class (postage prepaid), or e-mailed:

1) **If to Contractor:**

2) **If to Owner:**
Kristi Honeywell, P.E., State Engineer
Office of the State Engineer
523 East Capitol
Pierre, South Dakota 57501-3182
Phone: 605.773.3466 Fax: 605.773.5980
Kristi.honeywell@state.sd.us

3) **If to the Architect:**

Either party may change the addresses set forth for notice herein upon written notice thereof to the other.

ARTICLE VIII, CERTIFICATION REGARDING DEBARMENT, SUSPENSION, INELIGIBILITY, AND VOLUNTARY EXCLUSION:

Contractor certifies, by signing this Agreement, that neither it nor its principals is presently debarred, suspended, proposed for debarment, declared ineligible, or voluntarily excluded from participation, by any Federal department or agency, from transactions involving the use of Federal funds.

IN WITNESS WHEREOF, THE parties hereto have caused this instrument to be executed in one original counterpart the day and year above first written:

CONTRACTOR:

By: _____

(Affix Corporate Seal if Available)

Title: _____

Fed. Emp. Tax ID#: _____

OWNER: STATE OF SOUTH DAKOTA

_____

Exhibit "A"
AGREEMENT FOR CONSTRUCTION
Enumeration of Contract Documents

1. This agreement

2. The RFP for the proposed work dated February 1, 2015.

3. The Invitation for Bids and Instruction to Bidders contained in the RFP.

4. The Specifications are those contained in the RFP and are as follows:

5. The drawings are as presented in the RFP and are as follows:

6. The addenda, if any, are as follows:

Number	Date	Pages

7. The Performance and Labor and Material Payment Bond dated_____

Issued by_____. Bond #_____.

8. Other documents forming a part of the Contract Documents are:

GENERAL CONDITIONS

TO

AGREEMENT FOR CONSTRUCTION

FOR

Gilt Edge Mine Superfund Site SCADA Improvements
Near Lead, South Dakota

OSE# _____

INDEX

Article

Definitions 1

Execution, Correlation & Intent 2

Ownership, Use of Documents, Confidentiality of Documents 3
Ownership of Work Product 3.1
Confidentiality of Documents 3.2
Return of Documents 3.3
Terms to Be Included in Subcontracts 3.4

A/E's Responsibilities 4

Owner's Rights & Responsibilities 5
Information & Services Required of the Owner 5.1
Owner's Right to Stop the Work 5.2
Owner's Right to Carry Out the Work 5.3
Owner's Right to Access for Observation or Other Work 5.4

Contractor's Responsibilities 6
Review of Contract Documents 6.1
Supervision & Construction Procedures 6.2
Labor & Materials 6.3
Substitutions 6.3.4
Guarantees/Warranty 6.4
Taxes 6.5
Permits, Fees & Notices 6.6
Superintendent 6.7
Construction Progress Schedule 6.8
Documents & Samples at the Site 6.9
Shop Drawings, Product Data & Samples 6.10
Shop Drawing & Product Data Procedures 6.10.9
Samples Procedures 6.10.10
Use of Site 6.11
Cutting & Patching of Work 6.12
Cleaning Up 6.13
Communications 6.14
Royalties & Patents 6.15
Indemnification 6.16
Default 6.17

Subcontractors 7
Definitions 7.1
Award of Subcontracts & Other Contracts 7.2
Subcontractual Relations 7.3

Work by Owner or by Separate Contractors 8
Owner's Right to Perform Work & Award Separate Contracts 8.1
Mutual Responsibility 8.2
Owner's Right to Clean Up 8.3

Miscellaneous Provisions 9
Governing Law 9.1
Successors & Assigns 9.2
Written Notice 9.3
Claims for Damages 9.4
Performance & Labor and Material Payment Bond 9.5

Rights & Remedies 9.6
Tests 9.7
Litigation 9.8

Time 10
Definitions 10.1
Progress & Completion 10.2
Delays & Extensions of Time 10.3
Beneficial Occupancy 10.4
Payments & Completion 11
Contract Sum 11.1
Schedule of Values 11.2
Monthly Application for Payment 11.3
Recommendation for Payment 11.4
Progress Payments 11.5
Payments Withheld 11.6
Substantial Completion 11.7
Final Completion & Final Payment 11.8

Protection of Persons & Property 12
Safety Precautions & Programs 12.1
Safety of Persons & Property 12.2
Emergencies 12.3

Insurance 13
Workmen's Compensation Insurance 13.1.1
Commercial General Liability Insurance 13.1.2
Business Automobile Liability Insurance 13.1.3
All-Risk Builder's Risk Insurance 13.1.4
Certificates of Insurance 13.2

Changes in the Work 14
Change Orders 14.1
Site Conditions 14.4
Claims for Additional Cost 14.5
Minor Changes in the Work 14.6

Uncovering & Correction of Work 15
Uncovering of Work 15.1
Correction of Work 15.2
Acceptance of Defective or Non-Conforming Work 15.3

Termination of the Contract 16
Termination by the Contractor 16.1
Termination by the Owner 16.2
Termination for Convenience 16.3

Article 1
Definitions

1.1 **Owner:** The owner is the State of South Dakota acting through the legally appointed commissioner for the Bureau of Administration and his representative, the Office of the State Engineer.

1.2 **Architect/Engineer:** The term “architect/engineer” (hereinafter A/E) means the person or entity identified as such on the cover sheet to the drawings or plans and his/her authorized representative including his/her consulting engineer(s).

1.3 **Contractor:** The term "contractor" means the person or entity identified as such in the Agreement for Construction and his authorized representatives.

1.4 **Subcontractor:** Any individual, firm or corporation to whom the Contractor sublets any part of the contract for supplying materials and labor, or only labor, at the site of the project.

1.5 **The Contract Documents:** The documents identified as the Contract Documents in the Agreement for Construction.

1.6 **The Contract:** The Contract Documents form the contract. The contract may be amended or modified only in writing in the manner set forth in Article 14. Nothing contained in the Contract Documents shall create any contractual relationship between the owner and any subcontractor, sub-subcontractor or supplier.

1.7 **The Work:** The completed construction required by the Contract Documents, and every part thereof, and includes all labor necessary to produce such construction, and all materials and equipment incorporated or to be incorporated into such construction.

1.8 **The Project:** The total construction of which the work performed under the Contract Documents may be the whole or a part.

1.9 **The Drawings or Plans:** The graphic and pictorial portions of the Contract Documents showing the design, dimensions and layout of the work including, but not limited to, plan views, elevation views, details, sections, schedules, and diagrams.

1.10 **The Specifications:** The written requirements in the Contract Documents for materials, equipment, construction systems, standards and workmanship.

1.11 **The Project Manual:** The manual compiled for the work containing the Invitation for Bid, Instructions to Bidders, blank form of Bid Bond, blank form of Agreement for Construction, blank form of Performance and Labor and Material Payment Bond, sample forms, General Conditions, and Special Conditions.

Article 2
Execution, Correlation and Intent

2.1 By executing the contract, the contractor represents he has examined the plans, specifications, site of the proposed Work and Contract Documents in accordance with the requirements of the Instructions to Bidders.

2.2 The intent of the Contract Documents is to include all items necessary for the proper execution and completion of the Work. The Contract Documents are complementary, and what is required by any one shall be as binding as if required by all. Work not covered in the Contract Documents will not be required unless it is consistent therewith and is reasonably inferable therefrom as being necessary to produce the intended results. Words and abbreviations which have well-known technical or trade meanings are used in the Contract Documents in accordance with such recognized meanings. All work mentioned or indicated in the Contract Documents shall be performed by the Contractor as part of this Contract unless it is specifically indicated in the Contract Documents that such work is to be done by others. Should the Drawings or the Specifications disagree in themselves or with each other, the Contractor shall provide the better quality or greater quantity of work and/or materials unless otherwise directed by written change.

2.3 The organization of the Specifications into Divisions, Sections and Articles, and the arrangement of Drawings shall not control the Contractor in dividing the Work among Subcontractors or in establishing the extent of work to be performed by any trade.

2.4 Neither the Owner nor the A/E assumes any liability arising out of jurisdictional issues raised or claims advanced by trade organizations or other interested parties based on the arrangement or manner of subdivision of the content of the Specifications and Drawings.

2.5 The Contractor and all Subcontractors shall refer to all of the Drawings, including those showing primarily the work of the mechanical, electrical, and other specialized trades, and to all of the Sections of the Specifications, and shall perform all work reasonably inferable therefrom as being necessary to produce the indicated results. The Contractor shall promptly report any discrepancy or omission which it observes in the Construction Documents and any need for clarification or interpretation to the Owner and the A/E. The Contractor's failure to do so will cause any additional cost incurred by the Contractor to be its sole responsibility. The Contractor shall number Requests for Information in consecutive order. The Contractor shall maintain a log of each Request for Information indicating the date it was issued, the date or dates of any correspondence and/or discussions on the Request for Information, and the date a final answer is received.

2.6 The General Conditions and the Special Conditions are a part of each Section of the Specifications. The Special Conditions for Mechanical and Electrical Trades, if any, are part of each Section of the Specifications referenced therein, and apply to the work of the trades affected thereby.

2.7 A typical or representative detail indicated on the Drawings shall constitute the standard for workmanship and material throughout corresponding parts of the Work. Where necessary, and where reasonably inferable from the Construction Documents, the Contractor shall adapt such representative detail for application to such corresponding parts of the Work. The details of such adaptation shall be subject to prior approval by the A/E. Repetitive features shown in outline on the drawings shall be in exact accordance with corresponding features completely shown.

2.8 The layout of mechanical and electrical systems, equipment, fixtures, piping, ductwork, conduit, specialty items, and accessories indicated on the Drawings is diagrammatic, and all variations in alignment, elevation, and detail required to avoid interferences and satisfy architectural and structural limitations are not necessarily shown. Actual layout of the Work shall be carried out without affecting the architectural, engineering and structural integrity and limitations of the Work and shall be performed in such sequence and manner as to avoid conflicts, provide clear access to all control points, including valves, strainers, control devices, and specialty items of every nature related to such systems and equipment, obtain maximum headroom, and provide adequate clearances as required for operation and maintenance.

2.9 The Drawings shall not be scaled for dimensions. If figured dimensions are not given on the Drawings, the Contractor shall request same from the A/E giving reasonable advance notice.

2.10 All indications or notations which apply to one of a number of similar situations, materials or processes shall be deemed to apply to all such situations, materials or processes wherever they appear in the Work, except where a contrary result is clearly indicated by the Contract Documents.

2.11 Where codes, standards, requirements and publications or public and private trade associations or other bodies are referred to in the Specifications, references shall be understood to be in the latest revision prior to the date of receiving bids, except where otherwise indicated.

2.12 Where no explicit quality or standards for materials or workmanship are established for work, such work is to be of good quality for the intended use and consistent with the quality of the surrounding work, of the construction of the Project generally, and industry standards.

2.13 All manufactured articles, materials, and equipment shall be applied, installed, connected, erected, used, cleaned, and conditioned in accordance with the manufacturer's written or printed directions and instructions unless otherwise indicated in the Contract Documents. A copy of the manufacturer's written or printed directions shall be provided to the Owner upon completion of the project.

Article 3
Ownership, Use of Documents, Confidentiality of Documents.

3.1 Ownership Of Work Product

Any plans, specifications, engineering calculations, technical data, reports, miscellaneous drawings, and all information contained therein provided by the State, its consultants, employees, contractors and agents to the contractor for the contractor’s performance of its obligations under this agreement are the property of the State. They are to be used only with

respect to this Project and are not to be used for any other project. The contractor may not disseminate these materials to any person or entity nor may the contractor use these materials for purposes other than work for the state, without the express written approval of the state. The state shall not unreasonably withhold such approval for dissemination of these materials as necessary to subcontractors and suppliers.

3.2 Confidentiality Of Documents

All reports, plans, specifications, engineering calculations, technical data, miscellaneous drawings, and information contained therein provided to or prepared by the contractor, its owners, officers, employees, agents, consultants, suppliers, and subcontractors in connection with the contractor's performance under this Agreement are confidential and the contractor, its owners, officers, employees, agents, consultants, suppliers, and subcontractors shall not disclose this information to any person, individual, or entity without the express written permission of the state.

3.3 Return Of Documents

All documents covered by Article 3 shall be delivered to the A/E at the completion of the work. The contractor may not retain any such documents for its own use without the express written permission of the state and any documents that are retained, with or without state permission, shall be subject to all of the requirements of Article 3.

3.4 Terms To Be Included In Subcontracts

The contractor shall include the requirements of Article 3 in any contract it enters into with any consultants, subcontractors, suppliers, persons, individuals, or entities for the performance of any of the contractor's obligations under this agreement.

Article 4
A/E'S RESPONSIBILITIES

4.1 The A/E, under the direction of the State Engineer, will provide administration of the Contract as hereinafter described. The A/E will represent the Owner during construction. The A/E will advise and consult with the Owner. The Owner's instructions to the Contractor may be forwarded through the A/E. The A/E will have authority to act on behalf of the Owner only to the extent provided in the Contract Documents, unless otherwise modified by written instrument in accordance with Sub-Article 4.15.

4.2 The Contractor shall accept instructions only from the A/E or State Engineer, and not the A/E's consulting engineers, except as the A/E and State Engineer shall authorize in writing.

4.3 The A/E will visit the construction site at intervals appropriate to the stage of construction to keep generally familiar with the progress and quality of the work completed and to determine in general if the Project is being constructed in a manner such that when completed it would be in conformance with the plans and specifications and other Contract Documents. The A/E will not, however, be required to make exhaustive or continuous on-site inspections to check the quality or quantity of work. On the basis of such observations or inspections, the A/E shall keep the Owner informed of the progress and quality of the work on the Project and endeavor to guard the Owner against defects and deficiencies in the work of the Contractor. The A/E will maintain written reports of all site visits.

4.4 The A/E shall not have control over or charge of and shall not be responsible for construction means, methods, techniques, sequences or procedures, or for safety precautions and programs in connection with the Project, since these are solely the Contractor's responsibilities under the Agreement for Construction. The A/E shall not be responsible for the Contractor's schedules or failure to carry out the Project in accordance with the Contract Documents. The A/E shall not have control over or charge of acts or omissions of the Contractor, Subcontractors, or their agents or employees, or of any other persons performing portions of the Project, except to the extent that the A/E may formally notify the Contractor of the unacceptability of various portions of the Project or failure to carry out the Work on the Project in accordance with the Contract Documents.

4.5 The A/E will inform the Contractor on behalf of and in consultation with the Owner to cease work on the Project or portions thereof affected by those items that are unacceptable and remain uncorrected until such time as corrections are made.

4.6 The A/E shall at all times have access to the Work wherever it is in preparation and progress. The Contractor shall provide facilities for such access so the A/E may perform his functions under the Contract Documents.

4.7 Except as may otherwise be provided in the Contract Documents or when direct communications have been approved by the A/E, the Owner and its representatives and the Contractor shall communicate through the A/E. Communications by and with the A/E's consultants shall be through the A/E.

4.8 The A/E will determine the amounts owing to the Contractor based on inspections and observations at the site, and on evaluations of the Contractor's Monthly Applications for Payment, and shall issue Certificates of Payment for amounts due on forms provided by the State Engineer. A Certificate of Payment constitutes a representation by the A/E to the Owner, based upon the inspections and the information provided by the Contractor in the Application, that the Project has progressed to the point indicated; that to the best of the A/E's knowledge, information and belief, the quality of the work on the Project is in accordance with the Contract Documents; and that the Contractor is entitled to payment in the amount certified.

4.9 The A/E shall have authority to reject work on the Project which does not conform to the Contract Documents. Whenever the A/E considers it necessary or advisable for implementation of the intent of the Contract Documents, the A/E will have authority to recommend to the Owner additional inspection or testing of the Work in accordance with the provisions of the Contract Documents, whether or not such work is fabricated, installed or completed. However, neither this authority of the A/E nor a decision made in good faith either to exercise or not to exercise such authority shall give rise to a duty or responsibility of the A/E to any Construction Contractor, Subcontractors, material and equipment suppliers, their agents or employees or other persons performing portions of the work on the Project.

4.10 The A/E shall review and approve or take other appropriate action on Shop Drawings, Product Data and Samples submitted by Construction Contractors to determine if they conform with the design concept for the Project and with the information provided in the Contract Documents, and submit these documents or information to the Owner indicating the A/E's approval or comments with reasonable promptness so as to cause no delay to the prosecution of the Project.

Approval or acceptance of a specific item shall not necessarily indicate the A/E's approval of an assembly of which the item is a component. When professional certification of equipment is required by the Contract Documents, the A/E will be entitled to rely upon that certification to determine that the materials, systems, or equipment will meet the performance criteria required in the Contract Documents.

4.11 The A/E will conduct, at the time and place approved by the Owner, with representatives of the State agencies involved in the Project and the Contractor, inspections to establish dates of Project acceptance and completion. The A/E shall have other A/E's, Structural, Mechanical, or Electrical Engineers, or other consultants in their employ in attendance at this and at various progress inspections as may be necessary to evaluate whether the work completed on the Project is in conformance with the Contract Documents. The A/E will receive and forward to the Owner, with comments on completeness or acceptability, those warranties, operation manuals, and other documents required by the Contract Documents and assembled by the Contractor.

4.12 The A/E will review the final estimate for final payment to the Contractor and provide a Certificate of Final Payment to the Owner.

4.13 The A/E will provide to the Owner or the Contractor, upon written request in the form of a Request for Information, interpretations and decisions in writing, or in the form of drawings, on matters concerning performance under the Contract Documents, and execution or performance of the Work on the Project. Response to such requests shall be made with reasonable promptness and within any time limits agreed upon. The final decision on all such questions shall be made by the State Engineer.

4.14 The A/E will prepare Change Orders in accordance with Article 14, and will have authority to order minor changes in the Work as provided in Sub-Article 14.6.

4.15 The duties, responsibilities and limitations of authority of the A/E as the Owner's representative during construction as set forth in the Contract Documents will not be modified or extended without written consent of the Owner, the Contractor and the A/E.

4.16 In case of the termination of the employment of the A/E, the Owner shall appoint a replacement A/E whose status under the Contract Documents shall be that of the former A/E.

Article 5
OWNER'S RIGHTS AND RESPONSIBILITIES

5.1 Information and Services Required of the Owner.

5.1.1 The Owner shall furnish a survey describing the legal limitations and utility locations for the site of the project.

5.1.2 The Owner shall secure and pay for necessary easements, and other property rights required for the construction of the Project.

5.1.3 Information under the Owner's control shall be furnished by the Owner with reasonable promptness after receipt from the Contractor of a written request for such information.

5.1.4 Unless otherwise provided in the Contract Documents, the Contractor will be furnished, free of charge, 2 sets of paper prints of Drawings and 3 sets of Specifications necessary for the execution of the Work.

5.1.5 The Owner may forward instructions to the Contractor through the A/E or give instructions through the State Engineer.

5.1.6 The foregoing are in addition to other duties and responsibilities of the Owner enumerated herein and especially those in respect to Work by the Owner or by separate contractors, Payments and Completion, and insurance in Articles 8, 10, 11 and 13.

5.2 Owner's Right to Stop the Work: If the Contractor fails to correct defective Work as required by Article 15 or fails to carry out the Work in accordance with the Contract Documents in any material respect, the Owner, in addition to its other remedies, by a written order signed by the State Engineer or by the State Engineer's designated representative may order the Contractor to stop the Work, or any portion thereof, until the cause for such order has been eliminated; however, this right of the Owner to stop the Work shall not give rise to any duty on the part of the Owner to exercise this right for the benefit of the Contractor or any other person or entity.

5.3 Owner's Right to Carry Out the Work: If the Contractor defaults or neglects to carry out the Work in accordance with the Contract Documents in any material respect and fails within three working days after receipt of written notice from the Owner or in such time as may be established in written notice from Owner to commence and continue correction of such default or neglect with diligence and promptness, or if the Work is not being performed properly or in accordance with the scheduling provisions of the Contract Documents in any material respect, whether or not the Contractor is in default, the Owner may, after the expiration of such notice period and without prejudice to any other remedy he may have, make good such deficiencies. In such case an appropriate Change Order shall be issued deducting from the payments then or thereafter due the Contractor the cost of correcting such deficiencies, including compensation for the A/E's and State Engineer's additional services made necessary by such default, neglect or failure. If the payments then or thereafter due the contractor are not sufficient to cover such amount, the Contractor shall pay the difference to the Owner upon demand. If, in the sole judgment of the Owner, an emergency exists as a result of the Contractor's default, neglect or failure to correct defective work, which in the Owner's opinion, requires more immediate corrective action than the Contractor is able to provide, then the Owner may, without notice to the Contractor, perform such corrective work or cause it to be performed by others. The Owner shall also have the right to carry out the Work, or any part thereof, during the period of any work stoppage without terminating the Contract. If the Owner wishes to exercise this right it will give the Contractor three days notice of its intent to do so. In any such case, an appropriate deductive Change Order shall be issued in accordance with Article 14, the amount of which shall not exceed an amount which equals the estimated direct cost, including the State Engineer's fees, of performing the work which the Owner elects to perform and the proportionate amount of the Contractor's fee associated therewith.

5.4 Owner's Right to Access for Observation or Other Work: The Owner reserves the right of access to any part of the Work, at any time, for the purpose of observation, or testing, or to install other work, either with its own forces or with separate contractors. Such access is not to be construed to mean partial occupancy by Owner, and no claim for additional compensation by the Contractor because of such access or installation of work will be considered. Contractor shall cooperate with Owner during Owner's access or performance of work.

ARTICLE 6
CONTRACTOR'S RESPONSIBILITIES

6.1 Review of Contract Documents: The Contractor shall carefully study and compare the Contract Documents and shall at once report to the Owner and the A/E any error, inconsistency or omission he may discover. The Contractor shall not be liable to the Owner or the A/E for any damage resulting from any such errors, inconsistency or omission he may discover and report, nor for any damage resulting from any such errors, inconsistencies or omissions which he could not reasonably have discovered. The Contractor shall perform no portion of the work at any time without Construction Documents or, where required, Shop Drawings, Product Data or Samples for such portions of the Work bearing the A/E's appropriate action stamp.

6.2 Supervision and Construction Procedures.

6.2.1 The Contractor shall supervise and direct the Work, using the skill and attention necessary to complete the Work in a workmanlike manner. The Contractor shall be solely responsible for all construction means, methods, techniques, sequences and procedures and for coordinating all portions of the Work under the contract. Neither the Owner nor the A/E shall have control over, or responsibility for, any such matters.

6.2.2 Nothing contained in the Contract Documents shall be interpreted by implication or otherwise as a direction by the A/E or the Owner to the Contractor as to construction means, methods, techniques, sequences and procedures. If there is express reference to such means, methods, techniques, sequences and procedures, it is solely for the purpose of insuring that the Work will be produced in accordance with the desired objectives as set forth in the Construction Documents but such express reference shall in no way relieve the Contractor of his responsibilities in connection therewith. If the Contractor does not wish to accept the responsibility for any means, techniques, sequences or procedures which are expressly set forth in the Construction Documents, then the contractor shall notify the A/E in writing of the actual means, methods, techniques, sequences and procedures which he will employ on the Work if these differ from those expressly referred to in the Construction Documents. All loss, damage or liability or cost of correcting defective Work arising from the employment of any construction means, methods, techniques, sequences or procedures shall be borne by the Contractor notwithstanding that any of the same shall have been referred to expressly in the Construction Documents.

6.2.3 The Contractor shall be responsible to the Owner for the acts and omissions of his employees, Subcontractors, Sub-subcontractors, materialmen and suppliers and their agents and employees, and other persons performing any of the Work.

6.2.4 The Contractor shall not be relieved from his obligations to perform the Work in accordance with the Contract Documents either by the activities or duties of the A/E in his administration of the Contract, by the use or occupancy of part of the Work by the Owner as provided in Sub-Article 5.4, by the performance of work related to the Project by others as provided in Sub-Article 8.1, or by inspections, tests or approvals required or performed under Sub-Article 9.7 by persons other than the Contractor.

6.2.5 The Contractor shall retain a competent Registered Professional Engineer or Registered Land Surveyor, acceptable to the Owner and A/E, who shall establish the exterior lines and required elevations of all buildings and structures to be erected on the site and shall establish sufficient lines and grades for the construction of associated work such as, but not limited to, roads, utilities and site grading. The Engineer or Land Surveyor shall certify as to the actual location of the constructed facilities in relation to property lines, building lines, easements, and other restrictive boundaries.

6.2.6 The Contractor shall establish the building grades, lines, levels, column, wall and partition lines required by the various Subcontractors in laying out their work.

6.2.7 The Contractor shall coordinate and supervise the work performed by Subcontractors to the end that the work is carried out without conflict between trades or jurisdictional disputes and so that no Subcontractor, at any time, causes delay to the general progress of the Work. The Contractor and all Subcontractors shall at all times afford each other Subcontractor, any separate contractor, and the Owner, every reasonable opportunity for the installation of work and the storage of materials, and shall provide access to and the use of necessary loading dock and hoist facilities, adequate storage room and necessary utilities and other services.

6.2.8 Wherever the work of a Subcontractor is dependent upon the work of other Subcontractors, or the Contractor, the Contractor shall require the Subcontractor to:

6.2.8.1 Coordinate his work with the dependent work;

6.2.8.2 Provide necessary dependent data and requirements;

6.2.8.3 Supply and/or install items to be built into dependent work of others;

6.2.8.4 Make provisions for dependent work of others;

6.2.8.5 Examine dependent drawings and specifications;

6.2.8.6 Examine previously placed dependent work;

6.2.8.7 Check and verify dependent dimensions of previously placed work;

6.2.8.8 Notify Contractor of previously placed dependent work or dependent dimensions which are unsatisfactory or will prevent a satisfactory installation of his work; and

6.2.8.9 Not proceed with his work until the unsatisfactory dependent conditions have been corrected.

Installation of Work by a Subcontractor in any given area shall constitute acceptance by the Subcontractor and Contractor of the previously placed dependent work.

6.3 Labor and Materials.

6.3.1 Unless otherwise provided in the Contract Documents, the Contractor shall provide and pay for all labor, materials, equipment, tools, construction equipment and machinery, water, heat, utilities, transportation, and other facilities and services necessary for the proper execution and completion of the Work, whether temporary or permanent and whether or not incorporated or to be incorporated in the Work. The word "provide" shall mean furnish and install complete, including connections, unless otherwise specified. All connection charges, assessments or inspection fees which may be imposed by any public agency or utility company are included in the Contract Sum and shall be the Contractor's responsibility, except the final water and sewer connection charges which shall be paid by the Owner.

6.3.2 The Contractor shall at all times enforce strict discipline and good order among his employees and shall not employ on the Work any unfit person or anyone not skilled in the task assigned to him. The Contractor shall be responsible to maintain and observe, and to require his Subcontractors to maintain and observe, sound labor practices, and shall require each Subcontractor to take all steps reasonably necessary to avoid labor disputes or stoppages.

6.3.3 Except in the event of emergency, no substantial field operations shall be performed outside of regular working hours without the prior notification of the A/E and the Owner. The Contractor will not be entitled to additional compensation for work performed outside of regular working hours except as otherwise expressly agreed in writing by the Owner prior to the performance of such overtime work. Additional compensation for such authorized overtime shall be limited to the direct cost of the premium portion only of such authorized overtime. No additional indirect cost or fee shall be included.

6.3.4 Substitutions

6.3.4.1 The products, materials and equipment of manufacturers referred to in the Specifications and on the Drawings are intended to establish the standard of quality and design required by the A/E; however, products, materials and equipment manufacturers, other than those specified, may be used, if equivalent and approved in writing by the A/E.

6.3.4.2 It is deemed that the term 'or approved equal' is included after all products, materials and equipment referred to in the Specifications or on the Drawings.

6.3.4.3 The Owner in consultation with the A/E will be the sole judge of equivalency of proposed substitute products, materials, and equipment. The A/E will make written recommendation of acceptance or rejection to the Owner. The Owner will then authorize the A/E to issue to the Contractor written approval or rejection of the substitution.

6.3.4.4 If the Contractor desires to use a substitute item, he shall make application to the A/E in writing in sufficient time (having regard to the progress of the Work, the period of delivery of the goods concerned and adequate time for the Owner's and A/E's review) stating and fully identifying the proposed substitute, cost changes (if any), and submitting substantiating data, sample, brochures, etc. of item proposed. It is the Contractor's responsibility to provide sufficient evidence by tests or other means to support any request for approval of substitution.

6.3.4.5 Prior to proposing any substitute item, the Contractor shall satisfy himself that the item he proposes is, in fact, equal to that specified, that it will fit into the space allocated, that it affords comparable ease of operation, maintenance and service, that its appearance, longevity and suitability for the climate and use are comparable to that specified, and that the substitution is in the Owner's best interest.

6.3.4.6 The burden of proof that a proposed substitution is equal to a specified item shall be upon the Contractor, who shall support his request with sufficient test data and other means to permit the State Engineer and A/E to make a fair and equitable decision on the merits of the proposal. Any item by a manufacturer other than those cited in the Contract Documents, or of brand name or model number or of generic species other than those cited in the Contract Documents will be considered a substitution.

6.3.4.7 Materials and methods proposed as substitutions for specified items shall be supported by certification of their acceptance for use by an authority, person or persons having jurisdiction over the use of the specified material or method.

6.3.4.8 Acceptance of substitutions shall not relieve the Contractor from responsibility for compliance with all the requirements of the Construction Documents. The Contractor shall be responsible at his own expense for any changes in other parts of the work of his Contract or the work of other contractors caused by his substitutions, including cost of all design and redesign services related thereto incurred by the A/E and his consultants.

6.3.4.9 The Contract completion time shall not be extended by any circumstances resulting from a proposed substitution, nor shall the Contractor be entitled to any compensation for any delay caused thereby or related thereto.

6.3.4.10 All costs for the evaluation of proposed substitutions, whether approved or not, shall be borne by the Contractor.

6.3.5 All materials and equipment shall be delivered, handled, stored, installed and protected to prevent damage in accordance with best current practice in the industry, in accordance with manufacturers' specifications and recommendations, and in accordance with Contract Document requirements. The Contractor will store packaged materials and equipment in their original and sealed containers, marked with the brand and manufacturer's name, until ready for use, and deliver materials and equipment in ample time to facilitate inspections and tests prior to installation. The term 'delivery' in reference to any item specified or indicated, means the unloading and storing with proper protection at the project site. Damaged materials or equipment will be rejected and removed from the site by the Contractor.

6.3.6 Before ordering materials, equipment, or performing Work, the Contractor shall verify indicated dimensions. If a discrepancy exists, the Contractor shall notify the A/E of same immediately. The A/E will then clarify the intended design. The Contractor shall take field measurements required for the proper fabrication and installation of the Work. Upon commencement of any item of Work, the Contractor shall be responsible for dimensions related to such item of Work.

6.4 Guarantees/Warranty.

6.4.1 The Contractor guarantees and warrants to the Owner that all materials and equipment furnished under this Contract will be new unless otherwise specified, and that all Work will be of good quality, free from faults and defects and in conformance with the Contract Documents. All Work not conforming to these requirements, including substitutions not properly approved and authorized, may be considered defective. If required by the A/E or Owner, the Contractor shall furnish satisfactory evidence as to the kind and quality of materials and equipment. This guarantee/warranty is not limited by the provisions of Sub-Article 15.2.

6.4.2 The Contractor will indemnify the Owner against loss, including loss of use and lost revenues resulting from a breach of the Contractor's guaranty and warranty under Sub-Article 6.4.1, whether the loss arises before or after the Owner's acceptance of the Project.

6.4.3 Where the contract documents provide for equipment and material warranties in addition to the Contractor's guarantees' and warranty contained in Sub-Article 6.4.1, such warranties shall at a minimum:

6.4.3.1 Provide that the term of the warranty shall start on the date of substantial completion of the project or the date the Owner takes beneficial occupancy of any portion of the project that requires the use or start-up of the warranted equipment or material, whichever date occurs first.

6.4.3.2 Provide for complete repair or replacement of defective equipment or material;

6.4.3.3 Provide all materials, shipping, and labor necessary to repair or replace defective equipment or material at no expense to the Owner;

6.4.3.4 Provide that any replacement parts used in repairing or replacing defective equipment or material shall be new or in a like-new condition.

6.4.3.5 Provide for the complete repair or replacement of defective equipment or material within two weeks after receiving written notice of the defect, provided however, that the Owner can, at its sole discretion, grant an extension of time for good cause shown; and

6.4.3.6 Provide for no limitation of liability should the Contractor and/or manufacturer fail to repair or replace defective equipment or material within the time specified in Sub-Article 6.4.3.4 or should the remedy of repair or replacement otherwise fail.

6.4.3.7 Be construed under South Dakota law.

6.4.3.8 Provide that any legal action brought on the warranty shall be brought only in a South Dakota court.

6.5 Taxes: The Contractor shall pay all sales, consumer, use, excise, and other similar taxes for the Work or portions thereof which are to be provided by the Contractor which are legally enacted at the time bids are received, whether or not yet effective.

6.6 Permits, Fees and Notices.

6.6.1 The Contractor shall secure and pay for all permits and governmental fees, licenses and inspections necessary for the proper execution and completion of the Work which are customarily secured after execution of the Contract and which are legally required at the time the bids are received. The State does not require that inspection and license fees be paid to a municipality for work performed on State property.

6.6.2 The Contractor shall give all notices and comply with all laws, ordinances, rules, regulations and lawful orders of any public authority bearing on the performance of the Work and shall indemnify the Owner and the A/E against all costs, fines and damages, and all actions, claims and proceedings, due to its failure to do so.

6.6.3 The Contractor and its Subcontractors shall acquaint themselves with all codes governing their work and shall complete the work in conformance with all codes governing their work.

6.6.4 It is not the responsibility of the Contractor to make certain that the Contract Documents are in accordance with applicable laws, statutes, building codes and regulations. If the Contractor observes that any of the Contract Documents are at variance therewith in any respect, he shall promptly notify the Owner and the A/E in writing, and any necessary changes shall be accomplished by appropriate modification.

6.6.5 If the Contractor performs any Work knowing it to be contrary to such laws, ordinances, rules and regulations, and without such notice to the Owner and the A/E, he shall assume full responsibility therefor and shall bear all costs attributable thereto.

6.7 Superintendent: The Contractor shall employ a competent superintendent and necessary assistants all of whom are acceptable to the Owner and who shall be in attendance at the Project site during the progress of the Work. The Superintendent shall represent the Contractor and all communications given to the superintendent shall be as binding as if given to the Contractor. Important communications shall be confirmed in writing. Other communications shall be so confirmed on written request in each case. The Superintendent shall not be changed without the Owner's consent.

6.8 Construction Progress Schedule.

6.8.1 The Contractor shall, within 5 days, or within such time as determined by the A/E, after date of Notice to Proceed, prepare and submit to the A/E for approval a reasonable schedule showing the critical path, order in which the Contractor proposes to carry on the work and, the date on which he will start the several salient features (including procurement of materials, plant and equipment). The progress schedule shall indicate appropriately the percentage of work scheduled for completion at any time. If at any time the sequence of work is modified, the Construction Progress Schedule shall be updated.

6.8.2 The Construction Progress Schedule shall reflect the time required for the preparation and processing of shop drawings and submittals and the lead time required in connection with the procurement of manufactured or processed materials and equipment.

6.8.3 The Contractor shall furnish sufficient forces, construction plant, and equipment, and shall work such hours, including night shifts, overtime operations, and Sunday and holiday work, as may be necessary to insure the prosecution of the work in accordance with the approved progress schedule.

6.8.4 Whenever major portions of the Work fall behind the planned schedule, the Owner and A/E shall be notified and advised of action being taken to return the project to its original schedule and such action shall be indicated on the Construction Progress Schedule which shall then be reissued. If, in the opinion of the A/E and Owner, the Contractor is not taking adequate steps to improve or maintain the progress of the work, the A/E and Owner may require him to increase the number of shifts, and/or overtime operations, days of work, and/or the amount of construction plant, all without additional cost to the Owner.

6.9 Documents and Samples at the Site: The Contractor shall maintain at the site for the Owner one record copy of all Drawings, Specifications, Addenda, Change Orders and other Modifications, in good order and marked currently to record all changes made during construction, and approved Shop Drawings, Product Data and Samples. These shall be available to the A/E and Owner and shall be delivered to A/E for the Owner upon completion of the Work.

6.10 Shop Drawings, Product Data and Samples.

6.10.1 Shop Drawings are drawings, diagrams, schedules or other data specially prepared for the Work by the Contractor or any Subcontractor, manufacturer, supplier, or distributor to illustrate some portion of the Work.

6.10.2 Product Data are illustrations, standard schedules, performance charts, instructions brochures, diagrams and other information furnished by the Contractor to illustrate a material, product or system for some portion of the Work.

6.10.3 Samples are physical examples which illustrate materials, equipment or workmanship and establish standards by which the Work will be judged.

6.10.4 The Contractor shall submit a schedule for submittal of Shop Drawings, Product Data and Samples to the A/E for review. The Contractor shall review, approve and submit to the A/E, with reasonable promptness and in such sequence as to cause no delay in the Work or in the work of the A/E or any separate contractor, all Shop Drawings, Product Data and Samples required by the Contract Documents, in accordance with the schedule reviewed by the A/E.

6.10.4.1 The A/E reserves the right to review Shop Drawings, Product Data, Samples and submittals in a sequence consistent with the sequence of erection, installation and assembly of the various elements of the Work.

6.10.4.2 The Contractor's identification of Shop Drawings, Product Data and Samples shall include verification of information required in Sub-Articles 6.10.9.2 and 6.10.10.2.

6.10.4.3 No extension of time will be granted, nor will any consideration be given to claims arising out of the Contractor's failure to submit any Shop Drawing, Product Data, Samples or related submittals according to the schedule or otherwise in a manner which does not allow adequate lead time for A/E's review, or does not allow ample time for revision, resubmission and subsequent review by the A/E as required.

6.10.4.4 Composite Drawing: In the interest of coordination and expediting the work in critical areas, i.e. exterior wall components, mechanical/electrical systems, and other areas so requested by the A/E, the Contractor shall prepare and submit, to the A/E for review, Composite Drawings embodying the Work of the various trades and/or Subcontractors involved. After review, the Contractor shall distribute prints or reviewed Composite Drawings to affected trades and/or Subcontractors. The Contractor shall require that the involved trades and/or Subcontractors cooperate in preparation of the Composite Drawings to assure proper coordination between trades and/or Subcontractors. The participating trades and/or Subcontractors shall indicate their approval on these drawings.

6.10.5 By approving and submitting Shop Drawings, Product Data and Samples, the Contractor represents that he has determined and verified all materials, field measurement, and field construction criteria related thereto, checked the Shop Drawings, Product Data, and Samples for complete dimensional accuracy; that he has checked to insure that work contiguous with and having bearing on the work shown on the Shop Drawings is accurately and clearly shown, that he has checked the Shop Drawings against the Composite Drawings prepared by the Contractor, that the Work has been coordinated and that the equipment will fit into the assigned spaces, and that he has checked and coordinated the information contained within such submittals with the requirements of the Work and of the Construction Documents.

6.10.5.1 Any Shop Drawing, Product Data or Sample submitted without Contractor's approval will not be processed for review by the A/E, but will be returned to the Contractor for his compliance with the above procedures, in which event it will be deemed that the Contractor has not complied with the provisions herein specified and the Contractor shall bear the risk of all delays as if no Shop Drawing, Product Data and Sample had been submitted.

6.10.5.2 Shop Drawings shall bear a coordination and approval stamp signed by the Contractor and each contiguous Subcontractor, which shall confirm the representations set forth in Sub-Article 6.10.5. Shop Drawings shall bear the seal of a registered professional engineer or A/E when required by the Specifications or State Law.

6.10.6 The Contractor shall not be relieved of responsibility for any deviation from the requirements of the Construction Documents by the A/E's approval of Shop Drawings, Product Data or Samples under Sub-Articles 4.10 and 6.10.9 unless the Contractor has specifically informed the A/E in writing of such deviation at the time of submission and the A/E has given written approval to the specific deviation. The Contractor shall not be relieved from responsibility for errors or omissions in the Shop Drawings, Product Data or Samples by the A/E's approval thereof. Any deviation shall also be indicated on such Shop Drawing, Product Data, Sample, or related submittal by circling or other approved means.

6.10.7 The Contractor shall direct specific attention, in writing or on resubmitted Shop Drawings, Product Data or Samples, to revisions other than those requested by the A/E on previous submittals. Unless such written notice has been given, the A/E's Action on a resubmitted Shop Drawing, Product Data, or Sample shall not constitute Review and Action of any changes not requested on the prior submittal.

6.10.8 No portion of the Work requiring submission of a Shop Drawing, Product Data or Sample shall be commenced until the submittal has been approved by the A/E as provided in Sub-Article 6.10.9. All such portions of the Work shall be in accordance with approved submittals.

6.10.8.1 No Shop Drawing, Product Data or Sample shall be issued to the field without the A/E's Action Stamp affixed thereto.

6.10.9 Shop Drawing & Product Data Procedures

6.10.9.1 Shop Drawing Requirements: Shop Drawings shall show design, materials (kind, thickness and finish), dimensions, connections, rough openings, routing details, and other details necessary to insure that they accurately interpret Contract Drawings and Specifications and also show adjoining work in such detail as required to provide proper connection with same. Shop Drawings shall be numbered consecutively and insofar as possible shall be uniform in size.

6.10.9.2 Identification: All Shop Drawings and Product Data shall be identified with the name of the Project, Project Number, building or buildings for which the Shop Drawings and Product Data are being submitted, and shall contain the A/E's name, Contractor's name, Subcontractor's name, date of submittal, drawing number,

revision, if any, as well as the Specification Section under which the Work is to be performed and the Drawing and detail numbers that relate to the Shop Drawings and Product Data.

6.10.9.3 Transmittals: All Shop Drawings and Product Data shall be accompanied by a letter of transmittal from the Contractor setting forth the same identification information as required above under Sub-Article 6.10.9.2. Contractor shall number transmittals consecutively in sequence with the sample transmittals and shall indicate the Submittal Procedure number being followed. Transmittal shall also indicate if Shop Drawing is resubmittal and note A/E's file number for original submittal.

6.10.9.4 Submittal Procedures: The Contractor shall submit copies of Shop Drawings and Product Data to the A/E in accordance with Submittal Procedure numbers listed below. Reproducible prints shall be sepias or ozalid prints with positive side up. Black and white prints shall be black line on white background.

6.10.9.4.1 Submittal Procedure No. 1: Architectural Shop Drawings: One reproducible print and three black and white prints submitted directly to A/E.

6.10.9.4.2 Submittal Procedure No. 2: Structural, Mechanical and Electrical Shop Drawings: One reproducible print and three black and white prints submitted directly to A/E.

6.10.9.4.3 Submittal Procedure No. 3: Vertical Transportation and Special equipment, i.e., Elevators, Conveyors, etc., Shop Drawings: One reproducible print and five black and white prints submitted directly to A/E.

6.10.9.4.4 Submittal Procedure No. 4: When Product Data is submitted in the form of brochures, manufacturers' standard drawings, or catalog cuts not readily available in reproducible form, 7 copies of each shall be submitted directly to the A/E; additional copies shall be furnished only upon request by the A/E.

6.10.9.5 A/E's Distribution & Stamp: Following the A/E's review of each Shop Drawing and Product Data submission, the A/E will retain the black and white prints, and return the reviewed reproducible print to the Contractor with the A/E's stamp and signature affixed thereto, annotated as follows:

6.10.9.5.1 "A Action": "A Action" means the submission is in general conformance with the design concept. Construction, fabrication and/or manufacture can proceed subject to the provision that the Work shall be in accordance with the requirements of the Construction Documents. Final acceptance of the Work shall be contingent upon such compliance.

6.10.9.5.2 "B Action": "B Action" means the submission is in general conformance with the design concept subject to notations by the A/E on the returned Shop Drawings. Construction, fabrication and/or manufacture can proceed subject to the provision that the Work shall be carried out in compliance with all annotations and/or corrections indicated on the returned Shop Drawings and Product Data and in accordance with the requirements of the Construction Documents. Final acceptance of the Work shall be contingent upon such compliance.

6.10.9.5.3 "C Action": "C Action" means that the Contractor shall revise and resubmit the Shop Drawings and Product Data in accordance with all annotations and/or corrections indicated therein. Construction, fabrication and/or manufacture cannot proceed. Shop Drawings and Product Data bearing "C Action" stamp shall not be permitted on the Project Site.

6.10.9.5.4 "D Action": "D Action" means that the submission is rejected for nonconformance with the design concept and the Contractor shall make a new submittal which shall comply with the requirements of the Construction Documents. Construction, fabrication and/or manufacture cannot proceed. Shop Drawings and Product Data bearing "D Action" stamp shall not be permitted on the Project Site.

6.10.9.6 Contractor's Distribution: When transparencies are returned "A Action" or "B Action", the Contractor shall obtain and provide such number of prints to the Subcontractor as may be required by the Subcontractor

for his distribution. The Contractor shall have copies of all "A Action" or "B Action" Shop Drawings and Product Data at the Project Site at all times and shall make them available to the A/E's representatives.

6.10.9.7 Cost of Submittal and Distribution: All charges in connection with the delivery of Shop Drawings and Product Data to the A/E shall be paid by the Contractor. All charges in connection with the distribution of Shop Drawings and Product Data to the Contractor shall be paid by the Contractor.

6.10.10 Samples Procedures

6.10.10.1 Sample Requirements: Where possible, all samples required for a particular Specification Section shall be submitted together.

6.10.10.1.1 Samples shall be submitted from the same source which will supply the actual job. Samples shall be of adequate size to show quality, type, color, range, finish, texture and other specified characteristics.

6.10.10.1.2 Samples of materials or products which are normally furnished in containers or packages, which bear descriptive labels and/or application or installation instructions, shall be submitted with such labels and/or instructions.

6.10.10.2 Identification: All Samples shall be labeled, tagged, or otherwise clearly identified. Labels or tags shall set forth the name of the Project, the project number, buildings for which the Sample is being submitted, A/E, Contractor, Subcontractor, and/or supplier, the name of the manufacturer, fabricator, or processor, the trade designation, grade and quality of the material or product, the date of submittal, and specific identification of each sample and a precise reference to the Specification Article and Sub Article wherein the material, product, or element of the Work is specified. Each label or tag shall have sufficient clear space to permit the application of the approval stamp of the Contractor, and the action stamp of the A/E.

6.10.10.3 Transmittals: All samples shall be accompanied by a letter of transmittal from the Contractor setting forth the same identification information as required above under Sub-Article 6.10.4.2. Contractor shall number transmittals consecutively in sequence with the Shop Drawings and Product Data transmittals. Where appropriate, test data and/or manufacturers' certificates shall be referenced in and forwarded with the letter of transmittal. Samples without accompanying certificates or test data will be returned without action.

6.10.10.4 Submittal Procedure: The Contractor shall submit the number of samples as indicated below:

6.10.10.4.1 In the event that a range of variations in texture, graining, color or other characteristics may be anticipated in furnished materials, assemblies, or elements of the Work, a sufficient number of samples of such materials or products shall be submitted to indicate the full range of characteristics which will be present in the materials or products proposed for the Work. Any such materials or products delivered or erected prior to approval of full range samples shall be subject to rejection.

6.10.10.4.2 All Samples shall be submitted in triplicate to the A/E's home office, or where directed by the A/E, except as otherwise set forth in other Sections of the Contract Documents.

6.10.10.5 A/E's Distribution & Stamp: Following the A/E's review of each Sample submission, the A/E will return one set of each submission to the Contractor with the A/E's stamp and signature affixed thereto and annotated in a manner conforming to the convention established in Sub-Article 6.10.9.5.

6.10.10.6 Contractor's Distribution: When Samples are returned 'Action A' or 'Action B', the Contractor shall retain such Samples in a suitable place at the Project Site for use by the Contractor, his Subcontractors, the A/E and his authorized representatives to insure that all work is being installed in accordance with these Samples. The remaining Samples will be retained by the A/E.

6.10.10.7 Cost of Submittal and Distribution: All charges in connection with the delivery of Samples to the A/E's home office or where directed by A/E (and all charges in connection with the subsequent distribution thereof by the A/E) shall be paid by the Contractor.

6.11 Use of Site.

6.11.1 The Contractor shall confine operations at the Site to areas permitted by law, ordinances, permits and the Contract Documents and shall not unreasonably encumber the Site with any unnecessary or surplus materials or equipment or debris.

6.11.2 Notwithstanding the designation of construction limits or the indication of temporary fences or barricades, the provisions of the Contract Documents governing certain portions or phases of the Work may require that certain operations be carried out beyond such designated limits. Trenching, utility work, site development, landscaping and all other work, if required beyond such designated limits, shall be scheduled in such a manner as to cause or occasion a minimum of inconvenience or disturbance or interference with the normal operation of the Owner, abutters, and the public. The Contractor shall obtain the Owner's prior approval for such operations, prosecute such operations expeditiously and restore the affected area and other areas needed for access to their original condition immediately upon completion of such operations, unless otherwise specified herein.

6.11.3 All operations, including pumping, draining and control of surface and ground water shall be carried out so as to avoid endangering the Work of any adjacent facility or property, or interrupting, restricting or otherwise infringing or interfering with the use thereof.

6.11.4 The Contractor shall confine operations at the site to work related activities. The Contractor shall not use the site for lodging or as a personal residence.

6.12 Cutting and Patching of Work.

6.12.1 The Contractor shall be responsible for all cutting, fitting or patching that may be required to complete the Work or to make its several parts fit together properly.

6.12.2 The Contractor shall not damage or endanger any portion of the Work or the work of the Owner or any separate contractors or adjacent facilities by cutting, patching or otherwise altering any work, or by excavation. The Contractor shall not cut or otherwise alter the work of the Owner or any separate contractor except with the written consent of the Owner and of such separate contractor. The Contractor shall not unreasonably withhold from the Owner or any separate contractor his consent to cutting or otherwise altering the Work.

6.12.3 Structural elements of the Work shall not be cut, patched or otherwise altered or repaired without prior written authorization by the A/E.

6.12.4 Authorization to proceed with remedial operations for any damaged or defective element or portion of the Work shall not constitute a limitation or a waiver of the A/E's right to require the removal and replacement of any work which fails to fulfill the requirements of the Contract Documents.

6.13 Cleaning Up.

6.13.1 The Contractor at all times shall keep the Site and related streets free from accumulation of waste materials or rubbish caused by his operations. At the completion of the Work he shall remove all his waste materials and rubbish from and about the Project as well as his tools, construction equipment, machinery and surplus materials. All waste and rubbish shall be removed from the Site at least weekly and more often if necessary.

6.13.2 If the Contractor fails to maintain a clean and safe Project and/or fails to clean up at the completion of the Work, the Owner may do so as provided in Sub-Article 5.3 and the cost thereof shall be charged to the Contractor.

6.14 Communications: Except where otherwise directed by the A/E or otherwise provided in the Contract Documents, the Contractor shall forward all communications to the Owner through the A/E.

6.15 Royalties and Patents: The Contractor shall pay all royalties and license fees. He shall defend all suits or claims for infringement of any patent rights and shall save the Owner harmless from loss on account thereof, except that the Owner shall be responsible for all such loss when a particular manufacturer or manufacturers is specified, but if the Contractor has reason to

believe that the design, process or product specified is an infringement of a patent, he shall be responsible for such loss unless he promptly gives such information to the A/E and Owner in writing.

6.16 Indemnification.

6.16.1 To the fullest extent permitted by law, the Contractor shall indemnify, defend and hold harmless the Owner, the A/E and its consulting engineers, and their respective successors, agents and employees from and against all claims, damages, liabilities, losses and expenses, including but not limited to attorney's fees, arising out of or resulting from the performance of the Work, provided that any such claim, damage, loss or expense (1) is attributable to bodily injury, sickness, disease or death, or to injury to or destruction of tangible property (including the Work itself) including the loss of use resulting therefrom, and (2) is caused in whole or in part by any tortious act or omission of the Contractor, any Subcontractor, anyone directly or indirectly employed by any of them or anyone for whose acts any of them may be liable, regardless of whether or not it is caused in part by a party indemnified hereunder. Such obligations shall not be construed to negate, abridge or otherwise reduce any other right or obligation or indemnity which would otherwise exist as to any party or person described in this Sub-Article 6.16.

6.16.2 In any and all claims against the Owner, the A/E or any of its consultants, and their respective successors, agents or employees by any employee of the Contractor, any Subcontractor, anyone directly or indirectly employed by any of them or anyone for whose acts any of them may be liable, the indemnification obligation under this Article 6.16 shall not be limited in any way by any limitation on the amount or type of damages, compensations or benefits payable by or for the Contractor or any Subcontractor under workers' or workmen's compensation acts, disability benefit acts or other employee benefit acts.

6.16.3 The obligations of the Contractor under this Sub-Article 6.16 shall not extend to indemnification of the A/E or other design consultants employed by him, his consultant, agents or employees for damages, claims, losses or expenses arising out of: (a) the preparation or approval by the A/E or his design consultants of maps, drawings, opinions, reports, Change Orders, designs or specifications, or (b) the giving of or the failure to give directions or instructions by the A/E or his design consultants provided such giving or failure to give is the primary cause of the damage, claim, loss or expense.

6.16.4 The Contractor agrees to defend, indemnify and save the Owner, and A/E, or any of its consulting engineers, and their respective successors, agents or employees harmless from all costs, liabilities, damages or expenses, including reasonable attorneys' fees, incurred by them, by virtue of any claim or claims whatsoever filed by any Subcontractor, Sub-subcontractor, mechanic, laborer or materialman making claims arising from the Work by, through, or under the Contractor. The Contractor also hereby agrees to defend, indemnify and hold harmless, protect, and defend the Owner, the A/E and its consulting engineers, and their respective successors, agents or employees from and against any liability, claim, judgment, loss, damage, including but not limited to direct, indirect and incidental and consequential damages, attorneys fees, court costs and expense of collection, occasioned in whole or in part by the failure of the Contractor, its Subcontractor, or Sub-subcontractors to comply with any of the terms or provisions of the Contract Documents.

6.17 Default.

6.17.1 The Contractor shall be in default of the Contract if:

6.17.1.1 Contractor refuses or fails to prosecute the Work in accordance with the Contract Documents in any material respect;

6.17.1.2 Contractor fails to make proper payment to Subcontractors or for materials or labor (provided Owner shall have paid to Contractor any payments due from Owner in connection with such materials or labor);

6.17.1.3 Contractor disregards laws, ordinances, rules, building codes and regulations or orders of any public authority having jurisdiction;

6.17.1.4 Contractor fails to coordinate its work with other contractors and Subcontractors as required under Article 8 of these General Conditions;

6.17.1.5 Contractor fails to comply with the scheduling requirements of the Contract;

6.17.1.6 Contractor fails to promptly replace rejected material or correct rejected workmanship; or

6.17.1.7 Contractor fails in any material respect to observe any other terms, provisions, conditions, covenants and agreements in the Contract to be observed and performed on the part of the Contractor.

6.17.2 In the event of any default by Contractor under the Contract, Owner shall have the right to take such measures as it deems necessary to correct the default, at the Contractor's sole cost and expense and to deduct such costs, including but not limited to the State Engineer's and A/E's fees, as it may incur from amount otherwise owing to the Contractor, or to terminate the Contract in accordance with Sub-Article 16.2 of the General Conditions in addition to any and all other remedies that Owner may now or hereafter have. If the amounts owing to the Contractor are insufficient to cover the Owner's cost of corrections, the Contractor shall pay such amount promptly upon demand.

Article 7
SUBCONTRACTORS

7.1 Definitions.

7.1.1 A Subcontractor is a person or entity who has a direct contract with the Contractor to perform any of the Work at the site. The term Subcontractor is referred to throughout the Contract Documents as if singular in number and masculine in gender and means a Subcontractor or his authorized representative. The term Subcontractor does not include any separate contractor or his subcontractors.

7.1.2 A Sub-subcontractor is a person or entity who has a direct or indirect contract with a Subcontractor to perform any of the Work at the site. The term Sub-subcontractor is referred to throughout the Contract Documents as if singular in number and masculine in gender and means a Sub-subcontractor or an authorized representative thereof.

7.2 Award of Subcontracts and Other Contracts for Portions of the Work. The Contractor shall conduct an investigation of each of its proposed Subcontractor's capabilities to assure each is responsible and has the requisite experience, skill, physical plant, and financial strength necessary to perform each Subcontractor's respective Work. The Contractor shall not contract with any Subcontractor that is not responsible or does not have the requisite experience, skill, physical plant, and financial strength necessary to perform its part of the Work.

7.3 Subcontractual Relations.

7.3.1 The Contractor shall not include any provisions in its Contracts with its Subcontractors which will in any way prejudice the rights of the Owner and the Architect/Engineer under the Contract between the Owner and the Contractor.

7.3.2 The Subcontract agreement shall require the Subcontractor to consent to any assignment of the Subcontract to the Owner in the event of a default by the Contractor hereunder.

7.3.3 Nothing in Article 7 shall be construed to create a privity of Contract between the Owner and any Subcontractor.

Article 8
WORK BY OWNER OR BY SEPARATE CONTRACTORS

8.1 Owner's Right to Perform Work and to Award Separate Contracts.

8.1.1 The Owner reserves the right to perform work related to the Project with his own forces, and to award separate contracts in connection with such work. Such work may include Work assigned to the Contractor under the Contract Documents which Work is not being performed properly or in accordance with the scheduling provisions of the Contract Documents, whether or not the Contractor is in default under Sub-Article 6.17 and whether or not the Owner has terminated the Contract under Sub-Article 16.2. If the Owner elects to exercise this right it will do so upon reasonable notice to the Contractor. There shall be an appropriate adjustment in amounts payable to the Contractor to reflect the Work undertaken by the Owner, which the parties shall confirm by Change Order in accordance with Article 14. If the Contractor claims that delay is involved because of such action by the Owner, he shall make such claim as provided elsewhere in the Contract Documents.

8.1.2 When separate contracts are awarded for different portions of the Project or other work on the site, the term Contractor in the Contract Documents in each case shall mean the Contractor who executes each separate Owner-Contractor Agreement.

8.1.3 The Owner will provide for the coordination of the work, of his own forces and of each separate contractor with the Work of the Contractor, who shall cooperate therewith as provided in Sub-Article 8.2.

8.2 Mutual Responsibility.

8.2.1 The Contractor shall afford the Owner and separate contractors reasonable opportunity and all required facilities for the introduction and storage of their materials and equipment and the execution of their work, and shall connect and coordinate his Work with theirs as required by the Contact Documents.

8.2.2 If any part of the Contractor's Work depends for proper execution or results upon the work of the Owner or any separate contractor, the Contractor shall, prior to proceeding with the Work, promptly report to the A/E any apparent discrepancies or defects in such other work that render it unsuitable for such proper execution and results. Failure of the Contractor to report shall constitute an acceptance of the Owner's or separate contractor's work as fit and proper to receive his Work, except as to defects which may subsequently become apparent in such work by others.

8.2.3 Any costs caused by defective or ill-timed work shall be borne by the party responsible therefor.

8.2.4 Should the Contractor wrongfully cause damage to the work or property of the Owner or of a separate Contractor, or to other work on the site, the Contractor shall promptly remedy such damage as provided in Sub-Article 12.2.5.

8.2.5 Should the Contractor wrongfully cause damage to the work or property of any separate contractor, the Contractor shall upon due notice promptly attempt to settle with such other contractor by agreement, or otherwise to resolve the dispute. If such separate contractor sues or initiates a litigation proceeding against the Owner on account of any damage alleged to have been caused by the Contractor, the Owner shall notify the Contractor who shall participate in the defense of such proceedings at the Contractor's expense, and if any judgment or award against the Owner arises therefrom the Contractor shall pay or satisfy it and shall reimburse the Owner for all attorneys' fees and court costs which the Owner has incurred.

8.3 Owner's Right to Clean Up: If a dispute arises between the Contractor and separate contractors as to their responsibility for cleaning up the Project, the Site and related streets and walks on a routine basis as required by Sub-Article 6.13, the Owner may clean up and charge the cost thereof to the contractors responsible therefore as the Owner shall determine to be just.

Article 9
MISCELLANEOUS PROVISIONS

9.1 Governing Law: The Contract shall be governed by South Dakota Law.

9.2 Successors and Assigns: The Owner and the Contractor each binds himself, his successors, assigns and legal representatives to the other party hereto and to the successors, assigns and legal representatives of such other party in respect to all covenants, agreements and obligations contained in the Contract Documents. The Contractor shall not assign the Contract or sublet it as a whole without the written consent of the Owner, nor shall the Contractor assign any money due or to become due to him hereunder, without the previous written consent of the Owner.

9.3 Written Notice: All notices, demands and other communications hereunder shall be in writing and shall be deemed to have been given if sent pursuant to Article VII of the Agreement for Construction.

9.4 Claims for Damages: Should either party to the Contract suffer injury or damage because of any act or omission of the other party or of any of his employees, agents or others for whose acts he is legally liable, claim shall be made in writing to such other party within 14 days after the first observance of such injury or damage.

9.5 Performance and Labor and Material Payment Bond: Before commencing the Work, the Contractor shall provide a Performance and Labor and Material Payment Bond in accordance with the requirements of the Instructions to Bidders.

9.6 Rights and Remedies.

9.6.1 The duties and obligations imposed by the Contract Documents and the rights and remedies available thereunder shall be in addition to and not a limitation of any duties, obligations, rights and remedies otherwise imposed or available by law. This provision relates particularly to the Contractor's obligations under Sub-Article 15.2.2.

9.6.2 No action or failure to act by the Owner, A/E or Contractor shall constitute a waiver of any right or duty afforded any of them under the Contract, nor shall any such action or failure to act constitute an approval of or acquiescence in any breach thereunder, except as may be specifically agreed in writing.

9.7 Tests.

9.7.1 If the Construction Documents, laws, ordinances, rules, regulations or orders of any public authority having jurisdiction require any portion of the Work to be inspected, tested or approved, the Contractor shall give the A/E and Owner timely notice of its readiness so the A/E and Owner may observe such inspection, testing or approval. The Contractor shall perform and bear all costs of such inspections, tests and approvals, unless otherwise provided.

9.7.1.1 Where certain testing and inspection requirements are set forth in the various Sections of the Construction Documents to be performed at the expense of the Owner, the Owner will retain the services of testing laboratories, agencies, or consultants, to perform such tests or inspections and render such services as may be required to verify that the work fulfills the requirements and intent of the Construction Documents. Such services will be performed in a manner consistent with the requirements of the Owner and the various agencies having jurisdiction over the Work and in accordance with reasonable standards of architectural and engineering practice.

9.7.1.2 The Owner reserves the right to modify the scope of or to re-allocate any of the testing and inspection services specified in the various Sections of the Construction Documents to be performed by a testing laboratory, agency or consultant retained by the Owner in connection with the Work when it can be satisfactorily established that such adjustment in scope is consistent with the intent of the Construction Documents. In the event that the Contractor shall not concur with such modification of scope or re-allocation of such services, he shall immediately notify the A/E and Owner in writing.

9.7.2 If the A/E determines that any Work requires special inspection, testing, or approval which Sub-Article 9.7.1 does not include, he will upon written authorization from the Owner, order the performance of such services by qualified independent testing laboratories, agencies or consultants as may reasonably be required or instruct the Contractor to order such special inspection, testing or approval, and the Contractor shall give notice as provided in Sub-Article 9.7.1. If such special inspection or testing reveals a failure of the Work to comply with the requirements of the Construction Documents, the Contractor shall bear all costs thereof, including the cost of the tests, correction of the Work, the cost of retesting, and compensation for the A/E's additional services made necessary by such failure; otherwise the Owner shall bear such costs, and an appropriate Change Order shall be issued.

9.7.2.1 If A/E's observation or any inspection or testing undertaken pursuant to Sub-Article 9.7 reveals a failure in any one of a number of identical or similar items or elements incorporated in the Work to comply with (1) the requirements of the Construction Documents or, (2) with respect to the Performance of the Work, with laws, ordinances, rules, regulations, building codes or orders of any public authority having jurisdiction, the A/E will have the authority to order inspection and/or testing of all such items or elements of the Work, or of a representative number of such items or elements of the Work, as he may in his reasonable opinion consider necessary or advisable, and the Contractor shall bear all costs thereof, including the cost of the tests, correction of the Work, the cost of retesting, and the A/E's additional services, if any are required, made necessary thereby. However, neither the A/E's authority to act under Sub-Article 9.7 nor any decision made by him in good faith either to exercise or not to exercise such authority, shall give rise to any duty or responsibility of the A/E to the Contractor, any Subcontractor, any of their agents or employees, or any other person performing any of the Work.

9.7.3 Required certificates of inspection, testing or approval shall be secured by the Contractor and promptly delivered by him to the A/E and the Owner.

9.7.3.1 The Contractor shall obtain and deliver promptly to the Owner any certificates of final inspection of any part of his Work or operating permits for any mechanical or electrical apparatus, such as elevators, escalators, boilers, air compressors, fire alarms, etc., which may be required by law to permit full use and occupancy of the premises by the Owner. Except as is otherwise provided in Sub-Article 10.1.3, receipt of such permits or certificates by the Owner shall be a condition precedent to Completion of the Work.

9.7.3.2 Copies of reports issued as a result of services performed at the expense of the Owner pursuant to the provisions of this Article will be distributed to all parties to the Contract.

9.7.4 If the A/E or owner is to observe the inspections, tests or approvals required by the Contract Documents, they will do so promptly and, where practicable, at the source of supply.

9.7.5 In connection with testing and inspection services performed at the expense of the Owner, the Contractor shall provide Samples of materials and/or elements of the Work required as test specimens and shall provide incidental labor and facilities at the site reasonably required in support of such services.

9.7.6 The cost of testing services required solely for the convenience of the Contractor in his scheduling and performance of the Work shall be borne by the Contractor.

9.7.7 The cost of testing services related to remedial operations performed to correct deficiencies in the Work shall be borne by the Contractor.

9.7.8 If, during the course of the performance of any testing, inspection, control, balancing, adjusting, or similar work by the Contractor or an agent of the Contractor, it is the opinion of the A/E that the Contractor or said agent has failed to perform such work in a satisfactory manner, the Contractor shall, at his own expense, retain the services of a service organization which is satisfactory to the A/E for the performance of such work.

9.8 Litigation.

9.8.1 Unless otherwise specifically provided in this Agreement, all claims, counter-claims, disputes or other matters in question between the Owner and the Contractor arising out of, or relating to this Agreement, or the breach thereof, will be decided in a circuit court of competent jurisdiction within the State of South Dakota.

9.8.2 The Contractor shall carry on the Work and maintain its progress during any dispute or litigation proceedings, and the Owner shall continue to make payments to the Contractor to the extent required by the Contract Documents and South Dakota Law.

Article 10
TIME

10.1 Definitions.

10.1.1 The Contract Time is the period of time allotted in the Construction Contract for Substantial Completion of the Work as defined in Sub-Article 10.1.3, including authorized adjustments thereto.

10.1.2 The date of commencement of the Work is the date established in the Notice to Proceed.

10.1.3 The date of Substantial Completion of the Work is the date certified by the A/E when construction is sufficiently completed in accordance with the Contract Documents so that the Owner can occupy and utilize the Project for the use for which it is intended, and such Work is fully completed in accordance with the Contract Documents except for minor items, adjustments or corrections which have no material effect upon the utilization, function or intrinsic values of the entire Project, including all of its mechanical, electrical and other systems and facilities.

10.1.4 The term “day” as used in the Contract Documents shall mean calendar day unless otherwise specifically designated.

10.2 Progress and Completion.

10.2.1 All time limits stated in the Contract Documents, including the Construction Completion Schedule, are of the essence of the Contract.

10.2.2 The Contractor shall begin the Work on the date of commencement as defined in Sub-Article 10.1.2. He shall carry the Work forward expeditiously with adequate forces and shall achieve Substantial Completion within the Contract Time.

10.3 Delays and Extensions of Time.

10.3.1 If the Contractor is delayed at any time in the progress of the Work by any act or neglect of the Owner or the A/E, or by any employee of either, or by changes in the Construction Completion Schedule required by the Owner, or by any separate contractor employed by the Owner, or by changes ordered in the Work, or by labor disputes not caused by the labor practices of the Contractor or any Subcontractor in contravention of applicable labor practices, fire, unusual delay in transportation, severe and unusual weather conditions not reasonably anticipatable, unavoidable casualties, or any other causes beyond the Contractor's control and not occurring due to the fault or neglect of the Contractor, any Subcontractor or any other person for whose acts the Contractor is responsible, then the Contract Time shall be extended by Change Order for such reasonable time as the Owner shall determine, or the Owner may elect to require the Contractor to accelerate the Work, in which case the Contract Sum shall be increased by a Change Order in the amount of the direct cost to the Contractor (exclusive of overhead and profit of necessary over-time labor).

10.3.2 Any claim for extension of time shall be made in writing to the Owner with a copy to A/E not more than 10 days after the commencement of the delay; otherwise it shall be waived. In the case of continuing delay only one claim is necessary. The Contractor shall provide an estimate of the probable effect on such delay on the progress of the Work.

10.3.2.1 Such claims shall set forth in detail the nature of the circumstances which form the basis for each such claim, the date upon which each such alleged cause of delay began, or began to affect the timely prosecution of the Work, and ended, or ceased to have an adverse effect upon the timely prosecution of the Work, and the number of days extension of time requested as a consequence of each such alleged cause of delay. The Contractor shall provide such supporting documentation as the Owner may require, including, where appropriate, a revised Construction Completion Schedule indicating all of the activities affected by the circumstances which form the basis for the claim.

10.3.2.2 The Contractor shall not be entitled to a separate extension of time as a consequence of each one of a number of causes of delay which may have a concurrent or interrelated effect on the progress of the Work.

10.3.2.3 The Owner shall have the right to defer his decision or decisions with reference to any claim or claims for an extension of time made pursuant to the provisions of this Article until the facts or circumstances which form the basis for such claim or claims may be fully assessed to the Owner's reasonable satisfaction.

10.3.2.4 Notwithstanding the provisions of Sub-Article 10.3.2, claims for an extension of time arising out of authorized changes in the Work shall be made in writing prior to or concurrent with the submission of the Contractor's proposal pursuant to such change. No extension of time arising out of changes in the Work will be granted subsequent to the date upon which the Contractor is authorized to proceed with such change or changes in the Work unless specific provisions governing a subsequent determination of an extension of time have been incorporated in such authorization to proceed with such change or changes in the Work. No claim for damages or separate compensation for delay arising from such change in the Work shall be recognized or be deemed valid, it being understood that any additional cost to the Contractor arising from such change shall be included in the amended Contract Sum set forth in such Change Order.

10.3.2.5 Time extensions will not be granted for rain, wind, snow, or other natural phenomena of normal intensity for the locality where work is performed. Determinations of the extent of delay attributable to unusual weather phenomena shall be made by comparing the weather for the contract period involved with the average of the preceding five (5) year climactic range during the same period on the calendar. National Oceanic and Atmospheric Administration National Weather Service statistics for the locality or area where the work is performed shall be used to determine the five (5) year average weather conditions. Time extensions for weather delays do not entitle the Contractor to “extended overhead” recovery.

10.3.3 If no agreement is made stating the dates upon which interpretations as provided in Sub-Article 4.13 shall be furnished, then no claim for delay shall be allowed on account of failure to furnish such interpretations until 15 days after written request is made for them, and not then unless such claim is reasonable.

10.3.4 Should the contractor fail to substantially complete the work within the time agreed upon in the contract documents, or within such extra time as may have been allowed by increases in the contract or by formally approved extensions granted by the owner, the contractor and the contractor's surety shall be liable for and shall pay the owner the sums stipulated in the agreement for construction as liquidated damages for each calendar day of delay until the work is substantially complete. This sum is not a penalty but is liquidated damages due the owner from the contractor by reason of inconvenience to the public, added cost of engineering and supervision, and other items which have caused an expenditure of public funds resulting from the contractor's failure to complete the work within the time specified in the contract. In addition to liquidated damages, if any delay on the part of the contractor, any subcontractor or sub-subcontractor, anyone directly or indirectly employed by any of them, or anyone for whose acts any of them may be liable results in any claim by third parties against the owner or the A/E arising out of such delay, the contractor shall pay, satisfy, and discharge all losses, damages and expenses arising out of such claims, including attorneys' fees, and shall indemnify and hold harmless the owner and the A/E and their agents and employees from and against all costs, fees, losses, damages, and expenses arising out of such claims enforced against the owner or the A/E.

10.3.5 No extension of time will be granted to the Contractor for any delay other than those described in Sub-Article 10.3.1.

10.3.5.1 Should the Contractor fail, refuse or neglect to supply a sufficiency of workmen or to deliver the materials with such promptness as to prevent delay in the progress of the Work, or fail in any material respect diligently to commence and prosecute the Work and to proceed in accordance with the approved construction schedule, or if the different parts thereof are not commenced, prosecuted, finished, delivered or installed in such manner as will insure substantial completion in accordance with the approved Construction Completion Schedule, or if the Contractor shall fail in the performance of any of his obligations under this Contract in any material respect, the Owner shall have the right to direct the Contractor, upon 3 days notice at the Contractor's cost and expense, to furnish such additional labor and to expedite deliveries of materials (or the Owner may furnish such labor and expedite such deliveries at the cost of the Contractor), which labor or expediting shall, in the Owner's opinion, be sufficient to speed up and complete the Work in accordance with the Construction Completion Schedule.

10.3.5.2 If such additional labor shall not be available, the Owner shall have the right to direct the Contractor at the latter's own cost and expense, to work overtime to such an extent as will be sufficient, in the Owner's opinion, to speed up and complete the Work as herein provided.

10.3.6 The Contractor's right to make a claim or claims for an extension of time, as provided in Sub-Article 10.3.1, shall not preclude the Contractor's right to make a claim for delay damages arising out of the Owner's significant interference, by action or inaction, with the Contractor's Work.

10.4 Beneficial Occupancy.

10.4.1 The Owner shall have the privilege of Beneficial Occupancy and the use and benefit of designated areas, subdivisions or portions of the Project prior to completion and acceptance of the entire Project, provided that such Beneficial Occupancy shall not unduly interfere with the Contractor's operations nor unduly delay him in completing the entire Work. Such occupancy and use shall be further subject to the provisions set forth herein and the provisions of SDCL § 5-18B-13.

10.4.2 In the event that the Owner desires to exercise the privilege of Beneficial Occupancy, he shall give reasonable notice to the A/E and the Contractor. If the A/E determines that such proposed occupancy is reasonable and proper, the Contractor shall cooperate with the Owner in providing services and facilities reasonably required for the health, safety and comfort of the occupants and other parties lawfully present and/or entering or leaving the premises. Mutually acceptable arrangements shall be made between the Owner and the Contractor with regard to procedures, terms and conditions governing the operation and maintenance of such services and facilities as may be utilized for the benefit of the Owner. The Owner will assume proportionate and reasonable responsibility for operation of systems, equipment

and/or utilities required to provide such services, in part or in total, including proportionate and reasonable expenses of operation incidental thereto. No such Beneficial Occupancy shall accelerate the commencement of any warranty period on any system but only on the particular components being utilized.

10.4.3 The Owner's Beneficial Occupancy or use of such designated areas, subdivisions, or portion of the Work shall not constitute acceptance of systems, materials, or elements of the Work which are not in accordance with the requirements of the Contract Documents; nor relieve the Contractor from his obligations to complete the Work; nor for responsibility for loss or damage due to or arising out of defects in, or malfunctioning of, systems, materials, equipment, or elements of the Work; nor from other unfulfilled obligations or responsibilities of the Contractor under the Contract. If, however, damage results solely from any act of the Owner, the Owner will assume its proportionate responsibility for such damage.

Article 11
PAYMENTS AND COMPLETION

11.1 **Contract Sum:** The Contract Sum is stated in the Agreement for Construction.

11.2 **Schedule of Values:** Before the first Application for Payment, the Contractor shall submit to the Owner and A/E a schedule of values allocated to the various portions of the Work, prepared in such form and supported by such data to substantiate its accuracy as the Owner and A/E may require. The format and number of copies of such Applications for Payment shall be as directed by the Owner and the A/E. This schedule, unless objected to by the Owner, shall be used as a basis for the Contractor's Applications for Payment.

11.3 **Monthly Application for Payment.**

11.3.1 No later than the 5th day of each month the Contractor shall submit to the A/E his monthly itemized application for Payment. The Contractor shall not submit more than one pay application per month. The monthly Application for Payment shall be on AIA Document G702 and supported by such data substantiating the Contractors right to partial payment as the Owner or A/E may require; including but not limited to receipts, releases, and waivers of liens.

11.3.1.1 In applying for payment, the Contractor shall submit his monthly payment estimate based upon the approved schedule of work for the project, itemized in such form and supported by such evidence as will show his right to the payment claimed. Claims made on account of materials delivered and suitably stored at the site, but not incorporated in the work, shall be conditioned upon submission by the Contractor of Bills of Sale or such other procedure as will establish the Owner's title to such material or otherwise adequately protect the Owner's interest.

11.3.1.2 If the Contractor chooses to apply for payment for materials which cannot be incorporated into the Work, and cannot be stored on the site, he may do so provided the following conditions are met:

Unless otherwise agreed to by the Owner, the material shall be stored in a bonded or insured commercial warehouse within a geographic radius of 15 miles of the construction site, with the Owner being listed on the bond or insurance certificate as the sole beneficiary in the case of loss or damage to the stored materials. The Contractor shall be responsible for all storage, insurance or transportation costs associated with the materials. Conditions of insurance will apply to applicable portions of Sub-Article 11.3.1.2. Contractor shall provide the Owner with bills of sale or such other documents as will establish the ownership of the materials.

11.3.2 The Contractor warrants that title to all Work, materials and equipment covered by an Application for Payment will pass to the Owner either by incorporation in the construction or upon the receipt of payment by the Contractor, whichever occurs first, free and clear of all liens, claims, security interests or encumbrances, hereinafter referred to in this Article as "liens"; and that no Work, materials or equipment covered by an Application for Payment will have been acquired by the Contractor, or by any other person performing Work at the site or furnishing materials and equipment for the Project, subject to an agreement under which an interest therein or an encumbrance thereon is retained by the seller or otherwise imposed by the Contractor or such other person.

11.3.3 Monthly applications received after the 5th day of the month will be treated as if submitted on the 5th day of the following month.

11.4 Recommendation for Payment.

11.4.1 By the 15th of each month, the A/E will review the Contractors Monthly Application for Payment and make his certification to the Owner with a copy to the Contractor, for such amount as the A/E believes is properly due, or notify the Contractor in writing his reasons for withholding a Certificate as provided in Sub-Article 11.6.1.

11.4.2 The issuance of a Certification for Payment will constitute a representation by the A/E to the Owner, based on his observations at the site as provided in Sub-Article 4.3 and the data comprising the Monthly Application for Payment, that the Work has progressed to the point indicated; that, to the best of his knowledge, information and belief, the quality of the Work is in accordance with the Contract Documents (subject to an evaluation of the Work for conformance with the Contract Documents upon Substantial Completion, to the result of any subsequent tests required by or performed under the Contract Documents, to minor deviations from the Contract Documents correctable prior to completion, and to any specific qualifications stated in his Certificate); and that the A/E believes that the Contractor is entitled to payment in the amount recommended. However, by issuing a Certification for Payment, the A/E shall not thereby be deemed to represent that he has made exhaustive or continuous on-site inspections to check the quality or quantity of the Work or that he has reviewed the construction means, methods, techniques, sequences or procedures, or that he has made any examination to ascertain how or for what purpose the Contractor has used the moneys previously paid on account of the Contract Sum. The Owner will not be bound by the amount stated in the A/E's Certification for Payment in making determinations of amounts properly payable to the Contractor.

11.5 Progress Payments.

11.5.1 Based upon his review of the Monthly Application for Payment, and the A/E's Certification, the Owner shall make progress payments to the Contractor in such amounts as the Owner reasonably determines are properly due less the aggregate of previous payments in each case. Payment of amounts determined to be due by the Owner under each Monthly Application for Payment shall be due to the Contractor 20 days after the 15th of each month unless the A/E's certification was delayed by following the procedures of Article 11.6.1. In such case, payment shall be 25 days after the 15th of each month. The Owner shall at all times retain an amount sufficient to complete the Work pursuant to SDCL .§§ 5-18B-11 and 5-18B-13. If the Owner retains any portion of a certified progress payment that is properly due and undisputed beyond the time for payment specified herein and for reasons other than those required by statute, the Owner shall owe and pay the Contractor four percent (4%) interest compounded annually on the retained amount starting from the date payment first becomes due under this article.

11.5.2 The Contractor shall promptly pay each Subcontractor, upon receipt of payment from the Owner, out of the amount paid to the Contractor on account of such Subcontractor's Work, the amount to which said Subcontractor is entitled reflecting any amounts actually withheld, if any, from payments to the Contractor on account of such Subcontractor's Work. The Contractor shall not withhold retainage from its Subcontractors unless retainage is withheld from the Contractor by the Owner. The Contractor shall, by an appropriate agreement with each Subcontractor, require each Subcontractor to make payments to his Sub-subcontractors in similar manner.

11.5.3 The Owner shall, on request, furnish to any Subcontractor, if practicable, information regarding the percentages of completion or the amounts applied for by the Contractor and the action taken thereon by the Owner on account of Work done by such Subcontractor.

11.5.4 Neither the Owner nor the A/E shall have any obligation to pay or to see to the payment of any moneys to any Subcontractor except as may otherwise be required by law.

11.5.5 No Certification for Payment, nor any progress payment, nor any partial or entire use or occupancy of the Project by the Owner, shall constitute acceptance or approval of any Work not in accordance with the Contract Documents.

11.6 Payments Withheld.

11.6.1 The A/E may decline to certify the full payment of the amount requested by the Contractor in his monthly application to the extent necessary to reasonably protect the Owner. If the A/E is unable to certify payment in the amount of the Application, he will, within 10 days after receipt of the monthly application, notify the Contractor in writing the reasons he cannot make such a certification. If the Contractor and the A/E cannot agree on a revised amount within five days of A/E sending written notice, the A/E will promptly issue a Certification for Payment for the amount for

which he is able to certify to the Owner pursuant to Sub-Article 11.4.2. The A/E may also decline to certify payment because of subsequently discovered evidence or subsequent observations, he may nullify the whole or any part of any Certification for Payment previously issued, and the Owner may withhold payment of all or any part of an Application for Payment, to such extent as may be necessary to protect the Owner from loss because of:

11.6.1.1 Defective work not remedied;

11.6.1.2 Third party claims filed or reasonable evidence indicating probable filing of such claims;

11.6.1.3 Failure of the Contractor to make payments properly to subcontractors or for labor, materials or equipment;

11.6.1.4 Reasonable evidence that the Work cannot be completed for the unpaid balance of the Contract Sum;

11.6.1.5 Damage to the Owner or another contractor;

11.6.1.6 Reasonable evidence that the Work will not be completed within the Contract Time;

11.6.1.7 Failure to carry out the Work in accordance with the Contract Documents;

11.6.1.8 A lien or attachment is filed and such lien is not discharged within 5 days of demand from the Owner;

11.6.1.9 Failure of the Contractor and/or of the Mechanical or Electrical Subcontractors to comply with the mandatory requirements for maintaining "up-to-date" Record Drawings;

11.6.1.10 Incomplete or otherwise inadequate Application for Payment; or

11.6.1.11 Reasonable evidence that the Contractor is in material breach of his obligations under the Contract.

11.6.2 When the above grounds in Sub Article 11.6.1 are removed, payment shall be made for amounts withheld because of them.

11.7 Substantial Completion.

11.7.1 When the Contractor considers that the Work, or a designated portion thereof which is acceptable to the Owner, is Substantially Complete as defined in Sub Article 10.1.3 the Contractor shall prepare for submission to the A/E and Owner a list of items to be completed or corrected. The failure to include any item on such list does not alter the responsibility of the Contractor to complete all Work in accordance with the Contract Documents. When the A/E and Owner on the basis of an inspection determines that the Work or designated portion thereof is Substantially Complete, the A/E will then prepare a Certificate of Substantial Completion which shall establish the Date of Substantial Completion, shall state the responsibilities of the Owner and the Contractor for security, maintenance, heat, utilities and damage to the Work, and shall fix the time within which the Contractor shall complete the items listed therein. Warranties and Guarantees required by the Contract Documents shall commence on the Date of Substantial Completion of the Work or designated portion thereof unless otherwise provided in the Certificate of Substantial Completion. The Certificate of Substantial Completion shall be submitted to the Owner and the Contractor for their written acceptance of the responsibilities assigned to them in such Certificate.

11.7.2 Upon Substantial Completion of the Work or designated portion thereof and upon application by the Contractor and certification by the A/E, the Owner shall make payment, reflecting adjustment for defective or incomplete work, if any, for such Work or portion thereof, as provided in the Contract Documents. Double the amount necessary to complete the Work shall be retained by the Owner pursuant to SDCL § 5-18B-13.

11.8 Final Completion and Final Payment.

11.8.1 Upon receipt of written notice that the Work is ready for final inspection and acceptance and upon receipt of a final Application for Payment, the A/E and Owner will promptly make such inspection and, when they find the Work acceptable under the Contract Documents and the Contract fully performed, the A/E will promptly issue a final

Certificate for payment stating that to the best of his observations and inspections, the Work has been completed in accordance with the terms and conditions of the Contract Documents and that the entire balance found to be due the Contractor and noted in said final Certificate, is due and payable. The A/E's Final Certificate for Payment will constitute a further representation that the conditions precedent to the Contractor's being entitled to final payment as set forth in Sub-Article 11.8.2 have been fulfilled.

11.8.2 The final payment shall not become due until the Contractor submits to the A/E and Owner (1) an affidavit that all payrolls, bills for materials and equipment, and other indebtedness connected with the Work for which the Owner or his property might in any way be responsible, have been paid or otherwise satisfied, (2) consent of surety to final payment, (3) if required by the Owner, other data establishing payment or satisfaction of all such obligation, such as receipts, releases and waivers of liens arising out of the Contract, to the extent and in such form as may be designated by the Owner, (4) an Unemployment Compensation Contribution Certificate from the South Dakota Department of Labor, and (5) a full and complete release of the Owner from all liability under the Contract and otherwise, except to the extent provided in Sub-Article 11.8.4. If the Contractor fails to furnish such releases or waivers of liens as the Owner reasonably requires to determine that there are no outstanding liens, the Owner may require that Contractor, as a condition of final payment to furnish a bond satisfactory to the Owner to indemnify the Owner against any such liens. Cost of such bond shall be borne by the Contractor. If any such lien remains unsatisfied after all payments are made, the Contractor shall refund to the Owner all moneys that the latter may be compelled to pay in discharging such lien, including all costs and reasonable attorneys' fees.

11.8.3 Owner shall make final payment of all sums due to the Contractor 30 days after the completion and acceptance of the project by the Owner and Contractor's compliance with Article 11.8.2 above. If the Owner fails to make final payment to the Contractor within the time specified herein, the Owner shall pay the Contractor interest at the rate of eight percent (8%) compounded annually on the amount retained starting from the date final payment first becomes due.

11.8.4 The acceptance of final payment by the Contractor shall constitute a complete and unconditional waiver and release of any and all claims by the Contractor of whatever nature, and regardless whether they are then known or unknown, and a complete and unconditional release of the Owner and every person for whom the Owner is responsible for any and all matters related to the Contract or otherwise, except those claims which have been made in writing and identified by the Contractor as not having been settled at that time.

Article 12
PROTECTION OF PERSONS AND PROPERTY

12.1 Safety Precautions and Programs: The Contractor shall be responsible for initiating, maintaining and supervising all safety precautions and programs in connection with the Work, and for safeguarding all adjacent properties and facilities.

12.2 Safety of Persons and Property.

12.2.1 The Contractor shall take all reasonable precautions for the safety of, and shall provide all reasonable protection to prevent damage, injury or loss to:

12.2.1.1 All employees on the Work and all other persons who may be affected thereby;

12.2.1.2 All the Work and all materials and equipment to be incorporated therein, whether in storage or off the site, under the care, custody or control of the Contractor and any of his Subcontractors or Sub-subcontractors; and

12.2.1.3 Other property at the site or adjacent thereto, including but not limited to, work of the Owner or of separate contractors, trees, shrubs, lawns, walks, pavements, roadways, structures and utilities not designated for removal, relocation or replacement in the course of construction.

12.2.2 The Contractor shall give all notices and comply with all applicable laws, ordinances, rules, regulations and lawful orders of any public authority bearing on the safety of persons or property or their protection from damage, injury or loss, and shall indemnify the Owner and the A/E and save them harmless against all claims, penalties, actions and proceedings relating thereto or the Contractor's failure so to comply.

12.2.3 The Contractor shall erect and maintain, as required by existing conditions and progress of the Work, all reasonable safeguards for safety and protection, including posting danger signs and other warnings against hazards, promulgating safety regulations and notifying owners and users of adjacent utilities.

12.2.4 When the use or storage of any hazardous materials or equipment is necessary for the execution of the Work, the Contractor shall exercise the utmost care and shall carry on such activities under the supervision of properly qualified personnel.

12.2.5 The Contractor shall promptly remedy all damage or loss to any property referred to in Sub-Articles 12.2.1.2 and 12.2.1.3 caused in whole or in part by the Contractor, any Subcontractor, any Sub-subcontractor, or anyone directly or indirectly employed by any of them, or by anyone for whose acts any of them may be liable and for which the Contractor is responsible under Sub-Articles 12.2.1.2 and 12.2.1.3, except damage or loss attributable to the acts or omissions of the Owner or A/E or anyone directly or indirectly employed by either of them, or by anyone for whose acts either of them may be liable, and not attributable to the fault or negligence of the Contractor. The foregoing obligations of the Contractor are in addition to his obligations under Sub-Article 6.16.

12.2.6 The Contractor shall designate a responsible member of his organization at the Site whose duty shall be the prevention of accidents. This person shall be qualified as a safety supervisor by experience, training, or education and shall have the responsibility to insure and enforce safety requirements on behalf of the Contractor and shall be designated by the Contractor in writing to the Owner and the A/E.

12.2.7 The Contractor shall issue weekly safety reports to the Owner and the A/E attesting to conditions on the Site relating to safety and to actions taken.

12.2.8 The Contractor shall not load or permit any part of the Work to be loaded so as to endanger its safety.

12.2.9 The structure of the Project is designed to support the loads of the finished building. No provision is included for stresses or loads imposed by construction operations. If the Contractor desires to place such loads in excess of the design load shown on drawings, he shall submit drawings and calculations prepared by, and bearing the seal of a professional structural engineer of the proposed method for supporting such loads for the A/E's review and approval. No loading of any kind in excess of design loads shall be placed on any part of the building structure prior to the A/E's approval of submitted drawings and calculations. The costs of the A/E's review shall be borne by the Contractor.

12.2.10 The Contractor shall prepare a written report setting forth the circumstances and details related to any accident or occurrences involving death, bodily injury, sickness, disease, personal injury, and/or loss or injury to or destruction of tangible property. Such reports shall be forwarded promptly to the insurance carriers, the A/E and the Owner.

12.3 **Emergencies:** In any emergency affecting the safety of persons or property, the Contractor shall act, at his discretion, to prevent threatened damage, injury or loss and shall as promptly as conditions permit notify the insurance carriers, Owner, and A/E of the nature of the emergency and circumstances related thereto. Immediately thereafter, the Contractor shall prepare a written report setting forth in detail the action taken and describing in detail all circumstance and conditions which are related to such action.

Article 13
INSURANCE

13.1 The Contractor shall not commence work under this contact until he has obtained all the insurance required under this article and such insurance has been approved by the Owner. Each contractor shall maintain and shall ensure that each subcontractor maintain for the life of the contract:

13.1.1 **Worker's Compensation Insurance** as required by South Dakota Law and Employers Liability Insurance with a limit of not less than $1,000,000 each accident.

13.1.2 **Commercial General Liability Insurance** or equivalent form with a limit of not less than $1,000,000 each occurrence. If such insurance contains a general aggregate limit it shall apply separately to this Agreement or be no less than two times the occurrence limit.

13.1.3 **Business Automobile Liability Insurance** or equivalent form with a limit of not less than $1,000,000 each accident. Such insurance shall include coverage for owned, hired, and non-owned vehicles.

13.1.4 **Builder's Risk Insurance** in the full amount of this contract, upon any building, structure, equipment and appliance in the process of construction or installation under state contract and upon all materials on site, until such time as the building, structure, equipment and appliances have been finally accepted by the Owner and the contract completed. This insurance shall include the interest of the Owner, Contractor, Subcontractors, and Sub-subcontractors in the Work and shall insure against loss by physical damage including, without duplication of coverage, fire, flood, e x t e n d e d coverage, theft, vandalism, malicious mischief, and collapse.

13.2 **Certificates of Insurance**.

13.2.1 Certificates of the above insurance shall be filed with the Owner and shall be subject to the Owner's approval for adequacy of protection. Each respective contractor shall provide the certificates for the insurance required herein.

13.2.2 The Owner's approval or acceptance of such certificates of insurance shall in no way release or relieve the respective contractor from any responsibility, liability or obligation devolving upon him.

13.2.3 All insurance policies and certificates shall be issued only by companies authorized to do business in the State of South Dakota and acceptable to the Owner. It shall be the Contractor's responsibility to keep the respective insurance policies and coverages current and in force for the life of the contract.

Article 14
CHANGES IN THE WORK

14.1 **Change Orders:** A Change Order is a written order to the Contractor signed by the Owner, issued after execution of the Contract, authorizing a change in the Work or an adjustment in the Contract Sum or the Contract Time. The Contract Sum and the Contract Time may be changed only by Change Order. A Change Order signed by the Contractor indicates his agreement therewith, including the adjustment in the Contract Sum or the Contract Time.

14.2 The Owner, without invalidating the Contract, may order changes in the Work within the general scope of the Contract consisting of additions, deletions, or other revisions, the Contract Sum and the Contract Time being adjusted accordingly. All such changes in the Work shall be authorized by Change Order, and shall be performed under the applicable conditions of the Contract Documents. No later than the 5th day of each month, the A/E will process a written change order to include all outstanding RFPs.

14.3 The cost or credit to the Owner resulting from a change in the Work shall be determined in one or more of the following ways:

14.3.1 By mutual acceptance of a lump sum properly itemized and supported by sufficient substantiating data to permit evaluation. Such lump sum proposals shall be supported by a completely detailed analysis of the proposed change subdivided into the Work of the Contractor and/or the Work of each Subcontractor and/or Sub-subcontractors involved in the proposed change, as applicable, with each such subdivision further broken down into the following elements:

14.3.1.1 Number of man-hours of labor to be performed by each trade, craft or classification of employee involved in the proposed change.

14.3.1.2 The hourly rate for each such trade, craft or classification of employee, including the appropriate wage supplement for social security, old age and unemployment contributions, and such other employee benefits as may be established by statute or by written agreement negotiated by and between organizations representing such crafts or trades and representatives of their employers.

14.3.1.3 The estimated quantity of each item or element of material and/or equipment entering into the proposed change.

14.3.1.4 The unit cost of each such item or element of material and/or equipment.

14.3.1.5 Rental of items or units of construction plant and equipment with a schedule of the period or periods of use of such item or unit in connection with the proposed change.

14.3.1.6 Rental terms and rates for each such item or unit of construction plant and equipment. Rental for equipment shall be based on the following:

14.3.1.6.1 Hourly rental rates shall be based on 80% of the applicable rates for equipment listed in the 'Green Book', latest edition, (published by the Associated Equipment Distributors, 615 West 22nd Street, Oakbrook, Illinois, 60523).

14.3.1.6.2 Hourly rental rates for equipment not listed in the 'Green Book' shall be based on 100% of the applicable rates for equipment listed in the 'Blue Book', latest edition (published by Dataquest, 1290 Ridder Park Drive, San Jose, California, 95131).

14.3.1.6.3 Hourly rental rates determined from the 'Green Book' or 'Blue Book' includes all items of cost and expense to the Contractor, including gas, oil, maintenance, repairs, insurance, and transportation to and from construction site.

14.3.1.7 Power and/or other utilities entering into the proposed change.

14.3.1.8 Rates and terms applicable to such power and/or other utilities.

14.3.1.9 Additional premiums, if applicable, for the extension of insurance and bond coverages as required herein to the proposed change.

14.3.1.10 Applicable federal, state and local taxes.

14.3.1.11 Indirect Cost and Fee computed as a percentage override applied to net cost in accordance with the provisions of this Article.

14.3.2 By unit prices stated in the Contract Documents or subsequently agreed upon;

14.3.3 By cost to be determined in a manner agreed upon by the parties and a mutually acceptable fixed or percentage fee;

14.3.4 By the method provided in Sub-Article 14.3.12.

14.3.5 The Contractor shall require that the itemized analysis of each portion of the proposed change to be performed by a Subcontractor and/or Sub-subcontractor be prepared by each such Subcontractor and/or Sub-subcontractor in accordance with the format established herein. Copies of all such itemized analysis shall be appended to the Contractor's itemized analysis of the proposed change in the Work.

14.3.6 For purposes of calculating Indirect Cost and Fee in relation to Change Orders, the net cost of a proposed change in the Work shall include, and unless otherwise agreed in writing prior to the performance of the proposed change, shall be limited to the fair and reasonable estimated cost of the total of all of the individual items, elements, or components involved in proposed change in the Work (including adds and deducts) as set forth in Sub-Articles 14.3.1.1 through 14.3.1.11.

14.3.7 For each portion of a proposed net additive change in the Work to be performed directly by the Contractor, the cost to Owner shall include an increment for the Indirect Cost and Fee of the Contractor associated with such portion of proposed change of 8% of the net cost of the Work.

14.3.8 For each portion of a proposed net additive change in the Work to be performed directly by a Subcontractor, in addition to an increment or increments for Subcontractor's Indirect Cost and profit associated therewith of 8%, the cost to the Owner shall include a supplementary increment or increments for Contractor's Indirect Cost and Fee associated therewith of 6% of the net cost of the Work.

14.3.9 In computing Indirect Cost and Fee, the percentage for Indirect Cost and Fee shall be taken on basic wage only. No percentage override shall be taken on Social Security, Old Age and Unemployment contributions, contributions to Industry funds, education, and Training Funds and/or similar wage supplements, contributions or benefits.

14.3.10 Items, elements or components of changes in the Work or proposed changes which shall be classified as Indirect Cost and excluded from net cost shall include, but shall not necessarily be limited to:

14.3.10.1 All classifications of administrative, supervisory, and clerical personnel not engaged manually in the performance of the Work, including timekeepers, clerks, watchmen, and security personnel.

14.3.10.2 Miscellaneous expense, job burden, and/or other generalized categories of cost or expense.

14.3.10.3 Use of small tools.

14.3.10.4 Insurance other than insurance coverage required herein.

14.3.11 In changes in the Work involving both additions to and deductions in the Work, or any portion or element thereof, or the relocation or rearrangement of items, portions or elements thereof, or the substitution of any items, portions or elements thereof, such additions and deductions shall be balanced and the Contractor's Fee computed on the same basis for deductions as well as additions. If at the request of the A/E and/or the Owner a number of unrelated changes in the Work are set forth individually, summarized and totaled in a single Change Order for reasons of administrative convenience, the amount or amounts of individual deductive changes in the Work set forth therein shall, in any event, be balanced against the amount or amounts of individual additive changes in computing the Contractor's Fee for the purpose of adding and deducting.

14.3.12 If none of the methods set forth in Sub-Articles 14.3.1, .3.2 or .3.3 is agreed upon, the Contractor, provided he receives a written order signed by the Owner, shall promptly proceed with the Work involved. The cost of such Work shall then be determined by the Owner on the basis of the reasonable expenditures and savings of those performing the Work attributable to the change, including, in the case of an increase in the Contract Sum, a reasonable allowance for the Contractor's Fee. In such case, and also under Sub-Articles 14.3.3 and .3.4 above, the Contractor shall keep and present, in such form as the Owner may prescribe, an itemized accounting together with appropriate supporting data for inclusion in a Change Order, at the end of each day, and will submit to the Owner or his designated representative: (a) daily time slips showing the name of each workman employed on such work, the number of hours which he is employed thereon, the character of his duties, and the wages and benefits to be paid to him and on his behalf, and (b) a memorandum of the equipment used in the performance of such Work, together with the rental claimed therefor. Unless otherwise provided in the Contract Documents, cost shall be limited to the following: cost of materials, including sales tax and cost of delivery; cost of labor, including social security, old age and unemployment insurance, and fringe benefits required by agreement or custom; worker's or workmen's compensation insurance; bond premiums; rental value of equipment and machinery; and the additional costs of supervision and field office personnel directly attributable to the change. Pending final determination of cost to the Owner, payments on account shall be made on the basis of amounts reasonably estimated by the Owner. The amount of credit to be allowed by the Contractor to the Owner for any deletion or change which results in a net decrease in the Contract sum will be the amount of the actual net cost as confirmed by the A/E and agreed to by the Owner. When both additions and credits covering related Work or substitutions are involved in any one change, the allowance or credit for the Contractor's Fee shall be figured on the basis of the net increase, or decrease, if any, with respect to that change.

14.4 Differing Site Conditions

14.4.1 The Contractor shall promptly, and before the conditions are disturbed, give a written notice to the A/E of (1) subsurface or latent physical conditions at the site which differ materially from those indicated in this contract, or (2) unknown physical conditions at the site, of an unusual nature, which differ materially from those ordinarily encountered and generally recognized as inhering in work of the character provided for in the contract.

14.4.2 The A/E shall investigate the site conditions promptly after receiving the notice. If the conditions do materially so differ and cause an increase or decrease in the Contractor’s cost of, or the time required for, performing any part of the work under this contract, whether or not changed as a result of the conditions, the Contract Sum shall be adjusted as provided in this Article, provided that the work has been ordered in writing by Owner and A/E as provided in Sub-Article 14.1 above. There shall be included in the adjustment to the Contract Sum under the preceding sentence a reasonable allowance for any extraordinary increase in Indirect Cost borne by the Contractor because of such additional work.

14.5 Claims for Additional Cost.

14.5.1 If the Contractor wishes to make a claim for an increase in the Contract Sum, he shall give the A/E and Owner a written notice thereof within 10 days after the occurrence of the event giving rise to such claim except where claim is made in connection with deviations in Shop Drawing or Sample submittals, in which case claim shall be made in writing to the A/E concurrently with such submittals. This notice shall be given by the Contractor before proceeding to execute the work, except in an emergency endangering life or property in which case the Contractor shall proceed in accordance with Sub-Article 12.3. No such claim shall be valid unless so made. Any change in the Contract Sum resulting from such claim shall be authorized by Change Order.

14.5.2 If the Contractor claims that additional cost is involved because of, but not limited to, (1) any written interpretation pursuant to Sub-Article 4.13, (2) any order by the Owner to stop the Work pursuant to Sub-Article 5.2 where the Contractor was not at fault, (3) any written order for a minor change in the Work issued pursuant to Sub-Article 14.6, or (4) any deviation in Shop Drawing or Sample submittals from the requirements of the Contract Documents, the Contractor shall make such claim as provided in Sub-Article 14.5.1.

14.6 Minor Changes in the Work: The A/E will have authority to order minor changes in the Work not involving an adjustment in the Contact Sum or an extension of the Contract Time and not inconsistent with the intent of the Contract Documents. Such changes shall be effected by written order, and shall be binding on the Owner and the Contractor. The Contractor shall carry out such written orders promptly.

Article 15
UNCOVERING AND CORRECTION OF WORK

15.1 Uncovering of Work.

15.1.1 If any portion of the Work should be covered contrary to the request of the A/E or the Owner, or the requirements specifically expressed in the Contract Documents, it must, if required in writing by the A/E or the Owner, be uncovered for his observation and shall be replaced at the Contractor's expense.

15.1.2 If any other portion of the Work has been covered which the A/E or the Owner has not specifically required to observe prior to being covered, the A/E or the Owner may request to see such Work and it shall be uncovered by the Contractor. If such work be found in accordance with the Construction Documents, the cost of uncovering and replacement shall, by appropriate Change Order, be charged to the Owner. If such work be found not in accordance with the Construction Documents, the Contractor shall pay such costs unless it be found that this condition was caused by the Owner or a separate contractor as provided in Article 8, in which event the Owner shall be responsible for the payment of such costs.

15.2 Correction of Work.

15.2.1 The Contractor shall promptly correct all Work rejected by the A/E as defective or as failing to conform to the Construction Documents whether observed before or after Substantial Completion and whether or not fabricated, installed or completed. The Contractor shall bear all costs of correcting such rejected Work, including compensation for the A/E's additional services and the Office of the State Engineer fees made necessary thereby.

15.2.2 If, at any time after the Owner's acceptance of the fully completed Project any of the Work is found not to have been provided in conformance with the Construction Documents, or, if within one year after such acceptance any of the Work is otherwise found to be faulty or defective, the Contractor shall correct it promptly after receipt of a written notice from the Owner to do so. The Contractor shall also repair or replace any part of the Work which is damaged by the defective condition or the remedial Work. This obligation shall survive termination of the Contract, subject to the terms of any applicable statute of limitations. The Owner shall give such notice promptly after discovery of the condition.

15.2.3 The Contractor shall remove from the Site all portions of the Work which are defective or non-conforming and which have not been corrected under Sub-Articles 6.4.1, 15.2.1 and 15.2.2, unless removal is waived by the Owner.

15.2.4 If the Contractor fails to correct defective or non-conforming Work as provided in Sub-Articles 6.4.1, 15.2.1 and 15.2.2, the Owner may correct it in accordance with Sub-Article 5.3.

15.2.5 If the Contractor does not proceed with the correction of such defective or non-conforming Work within a reasonable time fixed by written notice from the A/E, the Owner may remove it and may store the materials or equipment at the expense of the Contractor. If the Contractor does not pay the cost of such removal and storage within 10 days thereafter, the Owner may upon 10 additional days written notice sell such Work at auction or a private sale and shall account for the net proceeds thereof, after deducting all the costs that should have been borne by the Contractor, including compensation for the A/E's additional services made necessary thereby. If such proceeds of sale do not cover all costs which the Contractor should have borne, the difference shall be charged to the Contractor and an appropriate Change Order shall be issued. If the payments then or thereafter due to the Contractor are not sufficient to cover such amount, the Contractor shall pay the difference to the Owner upon demand.

15.2.6 The Contractor shall bear the cost of making good all work of the Owner or separate contractors destroyed or damaged by such correction removal.

15.2.7 Nothing contained in this Article shall be construed to establish a period of limitation with respect to any other obligation which the Contractor might have under the Contract Documents, including Sub-Article 6.4 hereof. The establishment of any time period prescribed by the terms of any warranty required by the Contract Documents relates only to the specific obligation of the Contractor to correct the Work, and has no relationship to the time within which his obligation to comply with the Contract Documents may be sought to be enforced, nor the time within which proceedings may be commenced to establish the Contractor liability with respect to his obligations other than specifically to correct the Work.

15.3 Acceptance of Defective or Non-Conforming Work: If the Owner prefers to accept defective or non-conforming Work, he may do so instead of requiring its removal and correction, in which case a Change Order will be issued to reflect a reduction in the Contract Sum where appropriate and equitable. Such adjustment shall be effected whether or not final payment has been made.

Article 16
TERMINATION OF THE CONTRACT

16.1 Termination by the Contractor: If the Work is stopped for a period of 90 days under an order of any court or any public authority having jurisdiction, or as a result of an act of government, such as a declaration of a national emergency making materials unavailable, through no act or fault of the Contractor or Subcontractor or their agents or employees or any other persons performing any of the Work under a contract with the Contractor, then the Contractor may, upon 7 additional days written notice to the Owner and the A/E, terminate the Contract and recover from the Owner payment for all Work executed to the termination date, together with reasonable demobilization costs. The Contractor shall have no other right to terminate the Contract for any reason.

16.2 Termination by the Owner.

16.2.1 If the Contractor is in default under the Contract Documents, the Owner may, without prejudice to any other right or remedy and upon written notice to the Contractor, terminate the contract.

Prior to termination of the Contract, the Owner shall give the Contractor and his surety 10 calendar days written notice, during which the Contractor and/or his surety may rectify the cause of the termination. If rectified to the satisfaction of the Owner within said 10 days, the Owner may rescind its notice of termination. If not rectified, the termination for cause shall become effective at the end of the 10 day notice period. In the alternative, the Owner may postpone the effective date of the termination notice, at its sole discretion, if it should receive reassurances from the Contractor and its surety that the causes of termination will be remedied in a time and manner which the Owner finds acceptable. If at any time more than 10 days after the notice of termination, the Owner determines that the Contractor or its surety has not or is not likely to rectify the causes of termination in an acceptable manner or within the time allowed, then the Owner may immediately terminate the Contract for cause by giving written notice to the Contractor and its surety. In no event shall termination for cause terminate the obligations of the Contractor's surety on its payment and performance bonds.

Notice of termination, whether initial or given after a period of postponement, may be served upon the Contractor and the surety by mail or any other means at their last known places of business in South Dakota or elsewhere, by delivery to any officer or management/supervisory employee of either wherever they may be found, or, if no such officer, employee

or place of business is known or can be found by reasonable inquiry within 3 days, by posting the notice at the job site. Failure to accept or pick up registered or certified mail addressed to the last known address shall be deemed to be delivery.

Upon termination of the Contract, the Owner shall take possession of the premises and of all materials, tools, appliances, equipment, and other facilities on the Project, wherever stored, and may finish the Work by whatever method he may deem expedient. The Contractor shall assign Subcontracts to the Owner or to a designated substitute contractor promptly upon request. In such case the Contractor shall not be entitled to receive any further payment until the Work is finished and the Owner has determined its damages owing to the Contractor's default.

16.2.2 If the costs of finishing the Work, including compensation for the A/E's and Office of the State Engineer's additional services made necessary by the Contractor's default, and all other damages suffered by the Owner on account of the Contractor's default, exceed the unpaid balance of the Contract Sum, the Contractor shall pay the difference to the Owner, and this obligation for payment shall survive the termination of the Contract. If the costs of finishing the Work are less than the unpaid portion of the contract Sum, the Owner shall pay the unpaid balance of any amount properly owing to the Contractor for all Work executed to the date of termination, less actual damages. The Owner will not be obligated to pay any further amount on account of Direct Cost, Indirect Cost or Fee.

16.2.3 If it should be judicially determined that the Owner improperly terminated this Contract for cause, then the termination shall be deemed to be a termination for the convenience of the Owner.

16.3 Termination for Convenience.

16.3.1 The Owner may terminate this Contract at any time without cause, in whole or in part, upon giving the Contractor notice of such termination. Upon such termination, the Contractor shall immediately cease Work and remove from the project site all of its labor forces and such of its materials as Owner elects not to purchase or to assume in the manner hereinafter provided. Upon such termination, the Contractor shall take such steps as Owner may require to assign to the Owner the Contractor's interest in all Subcontracts and purchase orders designated by Owner. After all such steps have been taken to Owner's satisfaction, the Contractor shall receive as full compensation for termination and assignment the following:

(1) All amounts then otherwise due under the terms of this Contract,

(2) Amounts due for work performed subsequent to the latest Request for Payment through the date of termination,

(3) Reasonable compensation for the actual cost of demobilization incurred by the Contractor as a direct result of such termination. The Contractor shall not be entitled to any compensation for lost profits or for any other type of contractual compensation or damage other than those provided by the preceding sentence. Upon payment of the foregoing, Owner shall have no further obligations to Contractor of any nature.

16.3.2 In no event shall termination for the convenience of the Owner terminate the obligations of the Contractor's surety on its payment and performance bonds.

Gilt Edge Superfund Site

Automation Improvements

Addition of PLC control and remote monitoring capabilities to the existing site to allow un-manned operation

February 1, 2015

Table of Contents

1. REQUEST FOR PROPOSAL (RFP) 1

2. SITE HISTORY AND CONDITIONS 2

3. PROJECT PURPOSE: 2

4. EXISTING SYSTEMS 3

A. WATER TREATMENT PLANT 3
B. RUBY REPOSITORY (P&ID 00Y-07) 7
C. RUBY WET WELL 8
D. STRAWBERRY POND (P&ID 00Y-03): 8
E. HOODOO GULCH (P&ID 00Y-04): 11
F. SUNDAY PIT (P&ID 00Y-05): 11
G. ANCHOR HILL PIT (P&ID 00Y-06): 12
H. SITE OFFICE (P&ID 00Y-02): 12

5. FIELD SYSTEMS CONVERSIONS FOR REMOTE OPERATION 13

A. MODIFICATIONS TO THE HEAT TRACE SYSTEMS 13
B. MODIFICATIONS TO THE EMERGENCY POWER SYSTEMS 13
C. 14

6. SUMMARY OF PROJECT 14

APPENDIX SECTION A: SITE COMMUNICATION STUDY 16

1. RADIO INSTALLATIONS 17

APPENDIX SECTION B: WATER PLANT WORK 19

1. PLC WORK 19
2. HMI WORK 19
3. DEVICE ADDITIONS AND SITE WORK 20
4. PROCEDURE 20

APPENDIX SECTION C: RUBY REPOSITORY WORK 22

1. EXISTING EQUIPMENT MODIFICATIONS 22
2. DEVICE ADDITIONS 22
3. PROCEDURE 22

APPENDIX SECTION D: HOODOO GULCH 25

1. EXISTING EQUIPMENT MODIFICATIONS 25
2. DEVICE ADDITIONS 25
3. PROCEDURE 25

APPENDIX SECTION E: STRAWBERRY POND 28

1. EXISTING EQUIPMENT MODIFICATIONS 28
2. DEVICE ADDITIONS 28
3. PROCEDURE 28

APPENDIX SECTION F: SUNDAY PIT WORK 31

1. EXISTING EQUIPMENT MODIFICATIONS 31
2. DEVICE ADDITIONS 31
3. PROCEDURE 31

APPENDIX SECTION G: ANCHOR HILL PIT WORK 34

1. EXISTING EQUIPMENT MODIFICATIONS 34
2. DEVICE ADDITIONS 34
3. PROCEDURE 34

APPENDIX SECTION H: SITE OFFICE 37

1. EXISTING EQUIPMENT MODIFICATIONS 37
2. DEVICE ADDITIONS 37
3. PROCEDURE 37

APPENDIX SECTION I: SPECIFICATIONS/BIDDING DOCUMENTS 39

APPENDIX SECTION J: PROCESS CONTROL MODIFICATIONS - CDM 40

APPENDIX SECTION K: RAIN GAUGE CALCULATION 41

1. EXISTING EQUIPMENT MODIFICATIONS 41
2. DEVICE ADDITIONS 41
3. PLC WORK 41
4. MATHEMATICS 41

APPENDIX SECTION L: NEW SITE P&IDS 43

APPENDIX SECTION M: WATER PLANT PIDS 44

APPENDIX SECTION N: SITE REFERENCE DOCUMENTATION 45

1. Request for Proposal (RFP)

This RFP document is the basis for development and submitting a priced proposal for the automation improvements described herein for the Gilt Edge Mine Superfund Site. The document includes:

- Descriptions of the existing equipment
- Listing of proposed equipment and primary elements modifications and additions at each of the pumping facilities and the treatment plant
- Specifications/Bidding Documents
- On-Site Water Treatment Plant Operator requested Process Control Modifications
- Proposed Site P&IDs
- Existing Water Treatment Plant P&IDs
- Modificaions and additions to two existing site PLCs, one at the water treatment plant and one at the Ruby Repository pump house.

The winning contractor will be referred to in this request-for proposal as the SCADA contractor. The priced proposals from selected Contractors shall comply with the requirements listed and descriptions of operational conditions to be implemented at the various site locations described throughout this document, including the specifications (with control loop descriptions) and P&IDs in the appendix.

The work primarily includes software and programming for operation, a new HMI (desktop computer) at the Water Treatment Plant and 2 portable HMIs (laptop computers) for remote monitoring and operation, as well as specified control panels and backpanels (complete with components installed and tested prior to delivery). The panels will be provided and installed by the SCADA contractor. The SCADA and video systems will communicate via a new radio data network. Procurement, installation, integration and testing of the radio communications system is included in this contract. The Radio system will be a turnkey solution and will include radios, antennas, towers or poles, and all appurtenances and labor required for system installation and commissioning. Procurement, installation, integration and testing of a video monitoring system is also included in this contract. Additional process equipment and work described in the supporting documentation will be provided and mounted, but not wired, by the On-Site Water Treatment Plant Operations Contractor. Unless specifically stated otherwise, the SCADA Contractor shall be required to finalize all installations. This includes field conduit and wiring as well as PLC programming and HMI display development and revision. The SCADA contractor shall have responsibility for delivery of a fully functional control system as defined in these documents.

There are two existing PLCs at the site and also two PLCs that are part of packaged equipment. The SCADA Contractor shall modify the existing PLC programs and add the new field unit RTUs to make a complete plant control solution.

2. Site History and Conditions

The site is a Superfund site that is an inactive mine where acidic acid mine drainage is collected and treated. The following is from the EPA's webpage describing the site, conditions and remediation work

Site Risk: "*Sulfide waste rock and exposed ore zones contain sulfate and heavy metals, including arsenic, cadmium, chromium, copper, lead, nickel, silver and zinc, which generate acid mine drainage or contaminated leachate when exposed to oxygen and water. Elevated nitrates and cyanide were also present in heap leach residues.*" and "*Currently the transport of contaminants off site is controlled through the use of a high density sludge water treatment plant; the site presents no immediate threat to human health.*"

Further information on the site and remediation activities can be found at:
http://www2.epa.gov/region8/gilt-edge-mine

3. Project Purpose:

The purpose of this project is to provide controls revisions and additions, allowing the site remediation equipment to operate unattended via automatic PLC control. There is also a fallback to force the water plant into a failsafe mode, preventing outfall of untreated water into Strawberry Creek. This is currently accomplished with an existing PLC in the water treatment plant by placing the water treatment facility in a safe hold position pending manual intervention by operations personnel. Further, the control system shall notify offsite personnel of a situation requiring their attention by an integrated Autodialer system and make plant control data available for review by offsite computer systems via a simple web page. Site visit information along with data and procedural requests from the CDM Memorandum of July 22, 2013 titled "*Gilt Edge Mine Superfund Site Automation Improvements"* are referenced and implemented as practical. There will be an effort to minimize the impact to the facility in terms of implementation costs and training while achieving the desired outcome.

Some process improvements and control modifications mentioned in the EPA document "*Optimization Review: Gilt Edge Mine Superfund Site Water Treatment Site*" (EPA-542-R-13-002) have been incorporated as a part of this project as developed in the Automation Improvements document and/or site visit discussions. These are limited to instrumentation and control changes to allow modified facility control but not modifications to the chemical remediation portion of the facility.

Smart remote terminal units (RTUs), consisting of radio connected PLCs, will be added at Hoodoo Gulch, Strawberry Pond, Sunday Pit, Anchor Hill Pit, and office area. These units will be as identical as it is practical to make them so there will be a commonality of parts and maintenance. The SLC 5 PLC platform that is in service at the site at the Water Treatment Plant and the Ruby Repository must be supported by the new control system. The SCADA Contractor shall propose and implement the best available option for the site.

Each new control unit shall be configured to operate in a standalone mode. If there is a loss of communication, each RTU will operate independently for an adjustable period of time before dropping to a failsafe mode. Typically, if the system detects a loss of communication from one of the remote terminal units, it will start a ten-minute timer while trying to restore communication. After ten minutes with no communication resolution, the system will generate an alarm to the operators. If communication is not restored in an operator adjustable time following the alarm, the non-communicating controller will place that section of the operation in a failsafe mode. If this failsafe position reduces flow to the water treatment plant, it will go into BYPASS and generate alarms. If this occurs, the plant will remain in BYPASS until the mode is changed by operations; there is no automatic re-start. Once communication is regained, the normal polling from the central PLC (the water plant) will gather any missed alarm and process data. Depending on the software release version of the processors it may be necessary to program a comm buffer dump on the existing PLCs to keep them from locking up in times of poor communication.

Modifications shall be made to existing control panels and PLCs to incorporate any new automation required to control these sites. This is defined under the specific header for that site area as well as supporting documents in the Appendix.

4. Existing Systems

a. Water Treatment Plant

There are control items identified in the reports as well as operations requests that will be implemented in this revision, including:

a. Update HMI Software

1. Determine the most appropriate software upgrade to the existing HMI system software that will suffice for this automation revision.
2. The new development and operating software shall be installed on a new process control desktop computer with a new display unit to be located at the WTP. Development of the replacement program shall be done concurrent with operations.
3. Remote plant monitoring and control will be implemented through a web access VPN portal. Two new, portable remote computers shall be provided as a part of this contract and configured to control the facility. Web access from other computers shall be established to allow remote monitoring of operational parameters through a web page (no operations control) using a standard web browser.
4. Capability for remote operation of the site Pan, Tilt, Zoom video cameras will also be set up to allow camera operation from both the control computers and a secure VPN portal accessible to outside computers for SD DENR and EPA video camera access. VPN portals and

access will be set up by the SCADA Contractor. Capability for the On-Site Water Treatment Plant Operations Contractor to view and control these video units must be available.

5. Graphics will be extensively modified to accommodate the new field information. Graphics will include standard screen graphics as well as alarm and history displays. Refer to the specification sections 13500, 13502, and 13504 in the appendix for details on system requirements.

b. Add an Autodialer System

Autodialer software will be incorporated into the revised water plant control system to alert off-site personnel of site alarms. These systems will group alarms from the different pit area RTUs and specific alarms in the water treatment plant. A sample form is included in the appendix and will be filled out by On-Site WTP Operations Contractor and implemented by the SCADA Contractor. The PLC programmer will add the logic to emulate this form and determine which autodialer voice alarm to activate. Generally, the critical alarms will require quick site response while the general alarms may be acknowledged and issues resolved via the authorized remote computers without site intervention.

c. Additional Non-Process Monitoring Points

Inputs will be added to the PLC and HMI for the generator status, automatic transfer switch status, Tramont fuel system, and PLC UPS. It is assumed the existing water plant PLC has sufficient room to absorb these IO points. New graphics and alarms pages will be added to the HMI to show these points.

d. Video Camera Addition

A fixed position color video camera (CCTV-5) will be added in the treatment plant to allow a visual inspection of the clarifier discharge. This shall be available over the web as well as locally. This unit shall be Ethernet based and capable of 1080p, full color performance.

e. Automate Backwash of the Filters.

The softener system has been rebuilt and is controlled by its own PLC. The filter system status graphic exists on the plant PLC. This graphic shows the time cycle and operating hours between backwashes as well as instantaneous and totalized flow. Unless the pressure drop exceeds a maximum, this timed cycle is the normal mode of operation. When the run time is exceeded or the pressure drop exceeds the setpoint, a filter backwash is initiated by the softener PLC. Currently, regeneration initiation

is a manual operation. This revision will fully automate the backwash system by adding a control subroutine to the PLC.

Normal operation will be AUTOMATIC where the plant PLC will monitor the cycle timer and the differential pressure across the filters and determine when to initiate a backwash. Operations can assume control by selecting MANUAL position.

f. Automate the Lime Slurry System Restart Via Operator Request at the HMI.

The normal mode of the Lime Slurry system shall be AUTOMATIC. In this mode, the lime slurry PLC initiates a slaking cycle when LIT-0400 indicates the lime slurry tank level is low (below 40%).

The Lime System status and displays are currently brought into the Plant HMI so the operator can remotely monitor the unit function and any alarms.

A remote RESET button shall be added to the plant HMI displays of the Lime System Status so that the alarms can be cleared and the lime slurry system returned to service from the plant HMI. This may be done in one of two ways: using the existing software link if the Lime Slaker System program can receive outside reset commands or by using the spare wires between the Water Plant PLC cabinet and the Lime system control cabinet to wire a hard reset from the Plant PLC. This shall be determined during PLC program review and appropriate action taken. Add notification to Off-site operations personnel via the Autodialer system.

g. Fix Clarifier Rake Controller to Respond to Torque Inputs from the Rake Arm.

Physical inspection showed the travel limit switches and the torque initiating switches as well as the lift motor to be installed. P&ID I-2 shows the rake height system as being installed and going to the PLC.

A review of the Westech documentation indicates the reversing motor starter for the rake lift motor is not supplied. This is to be provided and installed by the On-Site Water Treatment Plant Operations Contractor. If PLC logic is missing or requires modification, it must be corrected as part of this SCADA Contract to make a fully automatic system with manual override capabilities**.**

h. Operations Requested Modifications to the Existing Water Plant Control

Included within is the outline form of the requested process changes to be incorporated in this revision. The actual document is included as Appendix I

of the package. Note: any items in square brackets […] indicate additions by HDR to accommodate site process changes.

1. If the filter feed level (LI-0300 at tank TK-004) reaches 99%, stop the water plant feed pump at the Strawberry Pond and put the water plant on HOLD. Sound both a computer alarm and a radio alarm. [Initiate an autodialer sequence to alert off-site personnel.]
2. If the water plant inflow meter (FIT-0200) reads less than 5% 15 seconds after a feed pump at the Strawberry Pond Pump House is started, [and the Sunday Pit dump valve indicates CLOSED], stop the pump and sound the computer and radio alarms. [Initiate and autodialer sequence to alert off-site personnel.]
3. Add high and low pH plant shutdowns based on reactor tank pH (AIC-0220). If the pH drops below 4.01 or rises above 11.99 [for a period of more than 2 minutes (operator adjustable)], stop the filter feed pump at the water treatment plant. After the filter feed pump shuts down, open the dump valve at the Sunday Pit (FV-301). If this valve does not show open within an operator adjustable time as indicated by ZSO-301, stop the Strawberry Pond pumps feeding the water treatment plant (P-401/P-403). Sound both a computer alarm and a radio alarm. [Initiate an autodialer sequence to alert off-site personnel.]
4. Add high and low pH plant shutdowns based on filter feed tank pH (AIC-0310). If the pH drops below 6.50 or rises above 10.01 [for a period of more than 2 minutes (operator adjustable stop the filter feed pump at the Water Treatment Plant. After the filter feed pump shuts down, open the dump valve at the Sunday Pit (FV-301). If this valve does not show open within an operator adjustable time as indicated by ZSO-301, stop the Strawberry Pond pumps feeding the Water Treatment Plant (P-401/P-403). Sound both a computer alarm and a radio alarm. [Initiate an autodialer sequence to alert off-site personnel.]
5. As mentioned in F, above add a software or physical contact to reset Lime silo and slaker alarms from the Water Plant HMI [Add alarms from the Lime silo and slaker to the autodialer system]
6. Modify existing effluent turbidity alarm setpoint time delays. Make alarm and shutdown point delays operator adjustable (with supervisory approval) and set high alarm (AAH-0360) delay to 2 minutes and high-high alarm (AAHH-0360) delay to 15 seconds. [Initiate an autodialer sequence to alert off-site personnel.]

i. Plant Equipment Additions and PLC Program Changes for Remote Monitoring and Operations

The existing satellite internet connection at the main office (see sheet 00Y602) shall be utilized for remote plant monitoring. This access will be limited by the use of a Virtual Private Network that will allow monitoring from a few computers and remote facility control from only two dedicated units. The monitoring stations will look at a web page type graphic and will not require any special software. These graphics will emulate some of the plant control screens and present camera video of the monitored sites. The computers requiring remote control capability over the internet will require additional Allen-Bradley specific software to be provided, installed, and configured by the SCADA Contractor.

Along with this is the previously defined auto-dialer software system that will notify a list of standby personnel of plant issues. The auto-dialer will have several messages available and will send a specific message depending on a pre-selected alarm condition. This will help the offsite person make a better decision on support requirements at the facility.

These modifications are defined in the Appendix at specification section 13441 and operator spreadsheet at specification 13500B.

b. Ruby Repository (P&ID 00Y-07)

a. New Instrumentation devices (see specifications 13441 and 13500A)

1. LT-220: level transmitter for the overflow pond (primary element by On-Site WTP Operations Contractor, integrated into SCADA by SCADA Contractor).
2. FQIT-221: 2”, ARD Wet Well Pit flow indicating totalizer style magnetic flowmeter. Provide local indication at the Ruby Repository existing HMI as well as at the Site (Water Plant) and remote HMIs.
3. LT-230: Level transmitter in the Ruby wet well for control of the new VFD driven pump, P-220 (primary element by others, wired, connected, and integrated into the control system by SCADA Contractor).
4. Monitoring points to the PLC and HMI for the generator, Automatic Transfer Switch, Tramont fuel system, and PLC UPS.
5. A Pan, Tilt, Zoom (PTZ) camera (CCTV-2) outside of the building to allow a visual inspection of the overflow pond. This PTZ camera shall have a weather protected, heated enclosure suitable for the local environment.
6. A VFD (mounted by others) and associated IO for the wet well pump
7. A new heat trace control panel (HTP-200)
8. TSL-206: building low temperature switch integrated into SCADA

9. Move the rain gauge input (YS-250) to the PLC. This will require addition of a single shot or off delay timer to extend the pulse of the rain gauge to two seconds for input to the PLC. This timer will be installed in the PLC cabinet. All math and totalization shall be done by the Ruby Repository PLC and stored in the history module of the plant HMI. Each pulse of the rain gauge is 0.01 inches of rain. Provide indications for rain in inches per hour, updated in two-minute increments, inches per day, inches per week, inches per month, and inches per year. Supporting math is in the Appendix K.
10. Set time delay after the Ruby Wet Well Pump, P-220 (H-Flume pump) starts to avoid suction surge from shutting the pump down immediately after starting.
11. Provide a 15 minute hold-up time UPS for the PLC and radio communications to provide ride-through until a genset starts in event of a power failure.

c. Ruby Wet Well (PID 00Y-07)

This wet well is outside the Ruby Repository pump house and collects seeps and runoff. The pump control and VFD will be added to the Ruby Pump house PLC. Devices specific to this wet well are:

a. A new hydrostatic level control loop and transmitter (LT-230; primary element by On-Site WTP Operations Contractor, integrated into PLC by SCADA Contractor) to control speed and operations of P-220.

b. A new 2”, flow totalizing and indicating magnetic flowmeter in the discharge line of P-220. Supplied and installed by the Water Plant site contractor and wired, setup, and integrated into SCADA by the SCADA Contractor.

c. A new pump (P-220) and its VFD (Pump & VFD by On-Site WTP Operations Contractor, integrated into SCADA by SCADA Contractor).

d. A new backup pump and its VFD (Pump & VFD by On-Site WTP Operations Contractor, integrated into SCADA by SCADA Contractor).

e. A local disconnect for the pumps (SS-P220; by On-Site WTP Operations Contractor).

A special programming requirement of the ARD Wet Well pumping system will be an option to change the operating mode based on the seasonal basis. This is required due to the wide variation in inflow between the dry and wet seasons. A list of additional monitor and control points and their associated control descriptions is included in the Appendix in specifications 13500 and 13441. This will be done by a selector switch on the HMI display.

d. Strawberry Pond (P&ID 00Y-03):

a. Pump Station Control Modifications

Strawberry Pond pump station will be automated by addition of a local PLC controller connected by radio to the site master PLC in the water treatment plant. Modifications to the existing VFD pump drive controls will include a provision for remote PLC operation. The existing manual control operation will be maintained for emergency use.

The pump discharge header is set up such that one 150 Hp pump (P-402) routes water from Strawberry Pond to Anchor Hill Pit in the event of a high level alarm. If a high level is determined in Strawberry Pond for five minutes as determined by LAH-403, the PLC will stop inflows by stopping Anchor Hill barge pump P-601 and Sunday pit barge pump P-301. If the level does not begin to drop, P-402 will start and pump water to the Anchor Hill Pit. This pumping will continue until the level returns to normal (LAH-403 clears) plus an operator adjustable dead band. The remaining two pumps, labeled P-401 (50Hp, and P-403 (150Hp) share a common discharge header and route water to the treatment plant or to Sunday Pit. Under normal operations, P-401 supplies the water plant and P-403 is on standby. If P-401 fails, P-403 can operate to supply the water treatment facility. In case of a HIGH-HIGH level in the Strawberry pit, P-403 will start and the automatic valve at Sunday pit (HV-1) will open, diverting all water to this pit. In this condition, flow to the water plant stops and it goes to a HOLD state.

	NORMAL LEVEL	LAH	LAHH	DUMP VALVE	WTP
P-401 to WTP	ON	ON	OFF	CLOSED	RUNNING
P-402 to Anchor Hill Pit	OFF	ON	ON	CLOSED	RUNNING
P-403 to Sunday Pit	OFF (BACKUP FOR P-401)	OFF	ON	OPEN	ON HOLD

Table 1: Strawberry Pit Pumps Operational Matrix

Feed to the water treatment plant will be set by the operator through the HMI and the VFD will modulate speed to maintain this flow. Speed and actuation of pump P-402, the dump to Anchor Hill Pit, will be manually set from the water plant HMI. At a high level in the Strawberry pit, P-402 will start and transfer water to the Anchor Pit. The speed of this pump can be remotely adjusted from the water plant but the rpm adjustment will be very tight to ensure adequate water is moving through the pump.

P-403 pump serves two purposes; it is a spare to P-401, feed to the treatment plant, and in case of a HIGH-HIGH level in the Strawberry pit, it will move water to the Sunday pit.

b.New Instrumentation Devices

1. Addition of a new PLC and radio as well as a UPS to support them for 15 minutes at a loss of power.
2. Modifications to the VFDs for remote control.
    a. There are three different VFD's in the pump house. A generic connection diagram is included in the drawings to show the intent of the control scheme. Final wiring will be determined based on the actual VFD schematic and performed by the SCADA Contractor.
3. Heat Trace Panel installation.
    a. This is the standard panel mentioned in section 5.b of this RFP. This panel allows the PLC to know when heat trace is required and if the heat trace is working.
4. TSL-406: Addition of building low temperature alarm switch.
5. LT-403: Addition of a level transmitter to monitor the Strawberry Pond Level (primary element by On-Site WTP Operations Contractor, integrated into SCADA by SCADA Contractor).
6. Add monitoring points to the PLC and HMI for the generator, Automatic Transfer Switch, Tramont fuel system, and PLC UPS as defined in section three of this report.

7. Add a weather protected, heated, PTZ camera (CCTV-4) outside of the building to allow a visual inspection of the overflow pond. Connect to the radio system and configure into the SCADA.
8. Add a submersible pump with a power monitor relay and PLC input at the Last Chance Pond (primary element by On-Site WTP Operations Contractor, integrated into SCADA by SCADA Contractor).

e. Hoodoo Gulch (P&ID 00Y-04):

a. Supply and install a new PLC and radio.

1. The PLC, radio, and UPS will be the same as that used throughout the facility. This commonality of parts will make replacement and spare parts management simpler.

b. Modifications to the pump for remote control

1. To allow the existing Hoodoo pump to be remotely operated, modifications of the control panel are required to interface with the new PLC. A modified schematic is shown in the drawings section, Appendix D of the "Automation Improvements" document.

c. Include provisions for a second pump with the same functionality as the first. The panels will be the same but the pumps will share the drain valve.

d. Supply and install a Heat Trace Panel to control and monitor the heat trace.

e. Connect and configure monitoring points to the PLC and remote HMI and OIT for the generator, Automatic Transfer Switch, Tramont fuel system, and PLC UPS.

f. Supply and install a weather protected PTZ camera (CCTV-1) to allow a visual inspection of the wet well level.

g. Connect and configure a level transmitter to monitor level (primary element by On-Site WTP Operations Contractor, integrated into SCADA by SCADA Contractor). This level transmitter, LT-120 shall be installed in a new stilling well. When the second Hoodoo pump is installed, LT-120 will be used to control the pump as well as continue to report level to the plant HMI.

h. Connect and configure a low-level shutdown switch to protect the new pump (primary element by On-Site WTP Operations Contractor, integrated into SCADA by SCADA Contractor). This will be installed in the new wet well along with the level transmitter LT-120.

i. Add an input for flow meter FIT-103 in the Hoodoo pipeline to allow monitoring and totalizing by the local PLC.

j. Revise the control of the existing dump valve FV-115 as shown on sheet 00E-02 to allow automatic operation.

f. Sunday Pit (P&ID 00Y-05):

a. Supply and install a new PLC, radio, and UPS.

b. Incorporate PLC control of the barge pump.

c. Connect and configure a motor driven actuator on valve FV-301 (actuator by On-Site WTP Operations Contractor, connected and integrated into SCADA by SCADA Contractor).

d. Connect and configure a motor driven actuator on valve FV-302 (actuator by On-Site WTP Operations Contractor, connected and integrated into SCADA by SCADA Contractor).

e. Incorporate PLC control of the Strawberry Pit dump valve FV-301.

f. Incorporate PLC control of the barge pump discharge valve FV-302.

g. Supply and install a Heat Trace Panel to control and monitor the heat trace of the return line and FV-301.

h. Supply and install a Heat Trace Panel to control and monitor the heat trrace of feed valve FV-302.

i. Connect and configure monitoring points to the PLC and remote HMI and OIT for the generator, Automatic Transfer Switch, Tramont fuel system, and PLC UPS.

g. Anchor Hill Pit (P&ID 00Y-06):

a. Supply and install a new radio, PLC, and UPS.

b. Connect and configure a motor driven actuator on diversion valve FV-601 (actuator by On-Site WTP Operations Contractor, integrated into SCADA by SCADA Contractor).

c. Incorporate PLC control of the barge pump.

d. Incorporate PLC control of the barge pump recycle valve FV-601.

e. Supply and install a Heat Trace Panel to control and monitor the heat trace.

f. Connect and configure monitoring points to the PLC and remote HMI and OIT for the generator, Automatic Transfer Switch, Tramont fuel system, and PLC UPS.

h. Site Office (P&ID 00Y-08):

a. Supply and install a new radio, PLC, and UPS.

b. Connect and configure monitoring points to the PLC and remote HMI and OIT for the generator, automatic transfer switch, Tramont fuel system, and PLC UPS.

i. General Site (P&ID 00Y-08):

a. Determine count and location then install radio repeater systems as dictated by radio site survey. These systems shall have a battery system capable of 48 hours of ride-through for enclimate weather in winter temperatures.

5. Field Systems Conversions for Remote Operation

a. Modifications to the Heat Trace Systems

i. Currently, the heat trace systems are manually activated by plugging the heat trace into a receptacle. This is not desirable for an unmanned operation. The drawing in the appendix is an automatic system that turns on the heat trace at temperatures below 40 degrees F and monitors the current to the heat trace to confirm it is actually working. Further, there is a Ground Fault sensing relay to determine if there is an insulation failure in the heat trace that may cause a safety issue.

b. Modifications to the Emergency Power Systems

i. Addition of remote monitoring capability at the various sites to allow, more informed monitoring of field assets. Among these are the generators, their fuel supply unit, engine block temperature, and the automatic transfer switch.

ii. Additional alarm points already available in the Tramont day tank system shall be added to allow remote monitoring of four alarms:
    1. General fuel system trouble
    2. High day tank level – indicating an over fill and possible spill.
    3. Low day tank level – indicating a possible generator shutdown and damage due to loss of fuel in the generator fuel header.
    4. Fuel in the rupture basin – indicating failure of the primary fuel tank.

iii. Additional alarm points already available in the generator control panel shall be added to the PLCs allowing remote monitoring of two alarms:
    1. Generator Running - Indicates a programmed exercise is occurring or the generator is running at the request of the automatic transfer switch or manual intervention. This is a notification to the plant operator and is recorded in the alarm log.
    2. Generator Alarm – This is a general-purpose alarm that will notify operations of the need for a visual inspection of the unit. This can be scheduled if the generator is offline but will be raised to critical if the unit is supplying power to the site as determined by the position of the transfer switch.

iv. Additional alarm points already available shall be added from the Automatic Transfer Switch to the PLC allowing remote monitoring of three alarms:
    1. ATS on Normal Power – Indicates utility power is available and supplying the load. This is the normal operational state for the ATS. A loss of this input will indicate there is no utility power available at the site. It also indicates the generator has not yet picked up the site loads.
    2. ATS on Emergency Power – This is an emergency situation and indicates that normal utility power is not available and the transfer switch has started the generator and connected the load to it. If the ATS is on

emergency power and there is a generator trouble alarm, this is a critical alarm and operations is notified.

3. ATS board failure – if the self-check of the transfer switch indicates an internal control failure, it will generate an alarm to the plant PLC.

.

6. Summary of Project

The overall project for automating operations for the Gilt Edge Water Treatment Plant is comprised of work completed by:

1) SCADA Contractor proposing on the work required in this RFP, including radio communications and video monitoring system, and;

2) On-Site Water Treatment Plant Operations Contractor.

SCADA Contractor (Work included in this RFP):

a. New Panel Fabrication: Following finalization of the IO for each pump station and Pit area, the new PLC panels can be designed and constructed. Specifications in the Appendix provide requirements and components of construction of these panels. The enclosures and panels will be installed under this contract. The SCADA Contractor will deliver a wired and tested backpanel to the field along with the necessary connection drawings to finish the electrical installation. The On-Site WTP Operations Contractor - Site Manager will be consulted on location of enclosure and PLC panel installations.

b. Programming work: Programming work will be done by the SCADA Contractor who will also supply the new panels, software, and computers required to automate the site. The SCADA Contractor's scope of work is defined in this document and further defined in the 13000 series specifications in Appendix H of this document.

c. Video Monitoring system: Procurement, installation, integration and testing of the video monitoring system will in performed under this contract. The cameras will mount on a radio antenna tower where practical and on their own mount where not. This will be determined on a case-by-case method. All video monitoring units will be an Ethernet based unit capable of at least 1080p, full color performance. Outdoor units shall be environmentally protected with heated, weatherproof enclosures and Pan, Tilt, Zoom capability.

d. Radio based communications system: Procurement, installation, integration and testing of the radio communications and alarm system will be performed under this contract.

On-Site Water Treatment Plant Operations Contractor:

a. Provide and Install Equipment and Instrumentation: The current On-Site Water Treatment Plant Operations Contractor will provide and install new components such as pumps, VFD, level indicators, and actuated valves and other equipment used to transfer water throughout the site. The On-Site Water Treatment Plan Operations Contractor - Site Manager should be contacted to ensure proper coordination of dependent activities. The On-Site WTP Operations Contractor will not install wiring or conduit for the SCADA contractor.

Appendix Section A: Site Communication Study

To control the facility as an operating unit will require reliable data communication between all the various pumping and storage facilities. Due to physical constraints of the site and the upcoming remediation, use of copper or fiber optic connections is impractical. This leaves radio as the only practical alternative.

Radio communication will be used to connect the remote PLCs to the water plant PLC which serves as the master. There will also be a radio link from the Water Treatment plant to the office area, which houses the satellite internet connection. It is assumed the radio units will be small enough to fit in the PLC cabinets and take advantage of their UPS and environment. Repeaters, if needed, will need to be self-contained in terms of power generation and storage. These can be solar or wind or a combination technology along with an energy storage unit and the ability to survive and perform in the environment of the area.

Normally, there will be little data translation over the radios since each PLC unit is a standalone unit that only transmits change of state information as necessary and analog data on a slow cycle. The only high rate data will be from the video monitor units at Strawberry Pit, Hoodoo Gulch, Ruby Pit, and the water treatment plant. These are demand only video feeds and are not normally in service. They are set to time out if unattended for a set time.

Currently, there is a DH+ data connection and a high speed, asynchronous modem connection from the Ruby Pit PLC to the water plant. If this hardwired connection becomes inoperable, it will be converted to a radio link. This is future work, however, the radio design must consider a future radio installation that will replace these copper connections with a wireless one.

Location of radio towers and repeaters must be coordinated with the future remediation activities to ensure the towers or repeaters do not need to be moved in the future. This coordination will be with the site manager.

A reliable data communication company will have to do a site survey to determine the proper equipment type and location to give reliable operation at the site such as Larson Data Communication from Mitchell, SD (866-996-5521).

The data communications company will perform a site and data rate evaluation based on the following items:

1. Run a computer model of the site elevation and the latitude, longitude, and elevation of the new radio installations. Determine future remediation impacts and revise model if necessary to be sure there are no issues. The site manager has final approval of all site equipment location.

2. Determine expected site uptime and reliability. The PLCs will operate in a standalone mode so there will be minimal data moving between PLCs. A lack of communication for several minutes will have no impact on overall site control.
3. Determine the site communication rate requirements. This is based on the data requirements of the PLCs and the video units. The PLC communication will be the least burden on the system. This will also be the least expensive installation. As video requirements are added, the price point will move based on the quality of the video required. Three data points should be evaluated:
    a. PLC data only
    b. Still photographs only, on a timed or event based request
    c. Full motion video
4. Determine if there is a need for repeaters and different power options for them. Considering site remediation work and remote location, solar, wind, or a combination may be the best option.

1. Radio Installations

1. Office Area

    This is the connection point for the satellite internet modem. Installation will include an Ethernet switch to connect the site data radio with the satellite. There will also be a WAP wireless access point inside the office trailer to accommodate the new, portable process computer. Note the existing front office computer will only have access to the plant via the web-based pages similar to other outside computers (other than the process computer). There will be no software modification to this unit.

    The office area data radio will communicate with the site radios for the purpose of connecting the plant to the satellite Internet and allowing the office to see the HMI screens.

    a. Install radio package with 15 minute UPS near the Northeast corner of the front office. Coordinate the actual location with the site manager.
    b. Install mast and antenna as designed by the data comm service.
    c. Connect satellite and new radio to wireless Ethernet switch.
    d. Connect and commission the new Wireless Access Point(s).
2. Water Treatment Plant.
    a. Install data radio package in the existing PLC panel at the electric room of the water plant. Tie radio power to the UPS system. Locate antenna as required from radio study and as directed by the site manager. Connect and commission a Wireless Access Point(s) for process access by the portable process computer.
    b. Install an Ethernet based networked printer to print alarm information and reports.

3. Strawberry Pump House
    a. Install radio in the new PLC panel and mount in the pump room of Strawberry Pond. Connect the radio to the UPS power supplying the PLC. Locate antenna as required from radio study.
4. Sunday Pit
    a. Install radio package in the new PLC panel on the electrical rack. Connect the radio to the UPS power supplying the PLC. Locate antenna as required from radio study.
5. Anchor Hill Pit
    a. Install radio package in the new PLC panel on the electrical rack. Connect the radio to the UPS power supplying the PLC. Locate antenna as required from radio study.
6. Hoodoo Gulch
    a. Install radio package in the new PLC panel on the electrical rack. Connect the radio to the UPS power supplying the PLC. Locate antenna as required from radio study.
7. Repeaters
    a. Location and number of repeaters will be determined by the data comm service. These panels will be self-contained with extended environmental duty radios to handle minimum temperatures of -20 DegF.
    b. If repeaters are powered from the utility, provide a 60 minute UPS at -20DegF to handle power outages.
    c. Consider using solar powered units for the repeaters as an alternative to powered units. Supply cost difference and run time data for consideration. Assume 30% of the run time will be presenting video and the remainder PLC data only.

Appendix Section B: Water Plant Work

1. PLC Work

a. Configure generator monitoring inputs, including block heater and temperature
b. Configure Automatic Transfer switch Inputs
c. Configure Tramont fuel system monitoring IO
d. Configure UPS alarms from PLC UPS

2. HMI Work

a. 13000 series specifications dictate the requirements of the new process control computer program. The water treatment plant PLC/HMI will now be the master PLC for the site. It will collect data from the distributed PLCs throughout the site and handle HMI graphics and historical record keeping.
b. Web screen management will be done by the master PLC and made available to selected computers via a Virtual Private Network and the satellite connection to the Internet.
c. Replace HMI/process control computer and display with a new unit.
d. Update/Replace the HMI software to include a Data Historian and point count to accommodate the added field PLCs.
e. Update/Replace the PLC programming software as required to program new PLC's.
f. Install autodialer emulation software (Win 411 or similar) and configure per spreadsheet 13500B in the specification section 13500. The relayed messages will be specific to an area or PLC. Spreadsheet 13500B presents alarm points and groupings that are used to generate a specific alarm. This must be coordinated with operations.
g. Build screens for new field PLCs.
h. Build a communication integrity screen. This screen can look at radio alarms, Ethernet packet failures, a PLC heartbeat or any combination to determine if there is a loss of communication at the site. This alarm is sent to the HMI for alarming and cataloging in the data historian. The alarm will notify operations of a data issue. After an adjustable period of time, the PLC suffering the radio issue can be programmed to shut down to a failsafe condition. This will be determined on a case-by-case basis.
i. Build a monitoring screen for each field video camera
j. Add a remote CYCLE START at the filter screen
k. Add a remote RESET at the Lime Slurry System screen. If this reset cannot be done with software, there are spare cables from the PLC cabinet to the Lime system control cabinet that can be used to send a dry contact closure.

l. Build an active site water flow graphic. This graphic will present instantaneous and totalized flow information as well as pump and valve status on a single overview screen.
m. Build data historian/report writer. Specification 13504 details these requirements.
n. Build website display package for VPN terminals.
o. Build VPN site for remote site monitoring by specific computers
p. Setup a portable computer with control software so plant changes can be made remotely.
q. Modify the existing base program to include the process personnel changes listed in section 2.A.viii of this report and Appendix I.

3. Device Additions and Site Work

a. Provided by On-Site WTP Operations Contractor
   1. Determine and install the necessary parts to allow automated operation of the Rake lift control.

b. Provided by this contract
   1. Add a Video camera (CCTV5) above the clarifier discharge to be integrated into the SCADA system.
   2. Add Genset alarm/monitoring conduit and wire integrated into SCADA.
   3. Add ATS alarm/monitoring conduit and wire integrated into SCADA.
   4. Add fuel system alarm/monitoring conduit and wire integrated into SCADA.
   5. Install Radio/UPS and connect to PLC IO and communication network.
   6. Add PLC UPS alarm points to PLC IO

4. Procedure

a. Wire two alarms from the UPS at the PLC into Discrete inputs. Tag wires as shown:

Tag	Service
XA-503A:	UPS General Alarm
XA-503B:	UPS on Battery

b. Find conduit and cable from the PLC panel to the existing genset control panel. Add a pair of wires to connect the general alarm to the PLC. Tag wires as shown:

Tag	Service
YI-500:	Generator Running
XA-500:	Generator General Alarm

c. Add conduit and cable from the new PLC panel to the existing Tramont fuel unit. Add enough cable for four dry contact signals. Connect to the PLC Discrete Input card in spare locations. Tag wires as shown:

TAG	Service
XS-501	General Fuel System Trouble Alarm
LSL-501	Low Fuel Level Switch
LSH-501A	High Fuel Level Switch
LSH-501B	Fuel in Containment Basin

d. Add conduit and cable from the new PLC panel to the existing Automatic Transfer Switch. Add enough cable for three dry contact signals. Connect to the PLC Discrete Input card in spare locations. Tag wires as shown:

Tag	Service
XS-502	ATS General Fault Alarm
YI-502A	ATS in Normal Position
YI-502B	ATS in Emergency Position

e. Mount the video camera (CCTV5) over clarifier discharge in a location directed by operations. Route an Ethernet cable in conduit from the camera to the Ethernet switch in the PLC cabinet. Power for the camera can come from the local clarifier control cabinet.
f. Install radio/UPS and connect to PLC IO communication network .
g. Field test and accept all components and control functions.

Appendix Section C: Ruby Repository Work

1. Existing Equipment Modifications

1. Re-connect two existing pressure switches on the pump discharge headers (by On-Site WTP Operations Contractor, integrated into SCADA).
2. Local graphic re-work
    a. Revise existing pump graphic to correct piping issues.
    b. Add Toe Pump control screen.
    c. Add a rain gauge display screen.
    d. Emulate water plant HMI screens.
3. PLC Modifications
    a. Add LI-220
    b. Add FQIT-221
    c. Add LIC-230
    d. Add Generator monitoring, including block heater and temperature
    e. Add Automatic Transfer Switch monitoring
    f. Add Tramont Fuel system Monitoring
    g. Add Rain gauge single shot relay and data input to PLC
    h. Add heat trace control IO
    i. Add Low building temperature alarm
    j. Add UPS and alarms

2. Device Additions

a. Provided by On-Site WTP Operations Contractor

1. Level Transmitter for the wet well
2. Flow transmitter for the wet well discharge pump
3. Level transmitter for the underground storage tank (H-Flume)
4. Level transmitter for the overflow pond
5. Pump and backup pump for wet well
6. VFDs for the two wet well pumps

b. Provided by this contract

1. Heat Trace Monitoring Panel
2. Building low temperature switch

3. Procedure

1. Add a UPS for the PLC cabinet and Operator Interface Terminal.
2. Build a heat trace panel per drawing 00E-501. Mount in pump building and power from an existing 120 volt power panel.

3. Permanently connect power, PLC control signals, and the heat trace to this panel. Turn ON, wait thirty minutes and adjust current switch sensitivity for dependable operation. The current switch should operate dependably when the heat trace cable is turned on and not drop out as the heat trace warms and the current drops. Adjust CT wraps, if necessary. Turn to AUTO position. Heat trace is now controlled by the PLC based on the operation of the ambient temperature switch TSL-205 and as controlled by the PLC.
4. Hydrostatic level transmitter to be installed by the On-Site WTP Operations Contractor in the bottom of the stilling well. SCADA Contractor to Coordinate zero and span settings with On-Site WTP Operations Contractor. Run conduit and analog cable back to the PLC analog input card in the position shown in the 13500 spreadsheet. Tag the cable LT-230.
5. Install conduit and cable from the existing genset control panel to the PLC panel. Add a pair of wires to connect the general alarm to the PLC. Tag wires as shown:

Tag	Service
YI-200:	Generator Running
XA-200:	Generator General Alarm

6. Add conduit and cable from the new PLC panel to the existing Tramont fuel unit. Add enough cable for four dry contact signals back to the PLC Discrete Input card in the positions shown in the 13500 spreadsheet. Tag wires as shown:

TAG	Service
XS-201	General Trouble Alarm
LSL-201	Low Fuel Level Switch
LSH-201A	High Fuel Level Switch
LSH-201B	Fuel in Containment Basin

7. Add conduit and cable from the new PLC panel to the existing Automatic Transfer Switch. Add cable for three dry contact signals back to the PLC Discrete Input card in the positions shown in the 13500 spreadsheet. Tag wires as shown:

Tag	Service
XS-202	ATS General Fault Alarm
YI-202A	ATS in Normal Position
YI-202B	ATS in Emergency Position

8. Mount and connect ambient temperature switch TSL-205 to the PLC Discrete Input card at the position shown in the 13500 spreadsheet. Tag wires as shown:

TAG	Service
TSL-205	Heat Trace Activation

9. Run conduit and wires for one Discrete Input and one Discrete Output signals from the Heat Trace Panel HTP-200 to the PLC and terminate at the position shown in the 13500 spreadsheet. Tag wires as shown:

TAG	Service
HS-205	Heat Trace Activation
XA-205	Heat Trace Failure Alarm

10. Mount and connect building temperature switch TSL-206 to the PC Discrete Input card at the position shown in the 13500 spreadsheet. Tag wires as shown:

TAG	Service
TSL-206	Low Temperature Ruby Pump House

11. Mount the video camera (CCTV2) on a support post and locate as directed by On-Site WTP Operations Contractor- Site Manager. Route the Ethernet cable in conduit from the camera to the Ethernet switch in the PLC cabinet. Ethernet switch must supply camera power by power over Ethernet.

12. Field test and accept all components and control functions.

Appendix Section D: Hoodoo Gulch

1. Existing Equipment Modifications

a. Pump Control Panel Changes
b. Dump Valve Control Changes
c. Generator monitoring, including block heater and temperature
d. Automatic Transfer Switch monitoring
e. Tramont Fuel system Monitoring

2. Device Additions

a. Provided by On-Site WTP Operations Contractor

1. Level Transmitter
2. Low Level Float Switch for pump shutdown

b. Provided by this Contract

1. PLC control cabinet with radio communication back to the water plant PLC.
2. Heat Trace Monitoring Panel
3. Video Camera Installation

3. Procedure

a. Mount pre-engineered and tested PLC cabinet to the electrical panel at Hoodoo gulch.
b. Power PLC cabinet and radio. Add UPS to maintain communications system in the event of a power failure. Align and install antenna for reliable communications.
c. Revise the pump control panel as per drawing 00E-02.
d. Remove the dump valve control switch from the pump control panel. Dress wires out of panel and seal hole.
e. Build a new switch per drawing 00E-02.
f. Mount a new Hoodoo Gulch Dump Valve control switch near the Soft start panel. Power this switch from the 120 volt panel, not the pump panel.
g. Connect the dump valve wiring and PLC wiring to the new switch.
h. Build a heat trace panel per drawing 00E-02.
i. Mount in field and power from the existing 120 volt power panel.
j. Permanently connect PLC control signal and the heat trace to this panel. Turn ON, wait thirty minutes and adjust current switch sensitivity for dependable operation. Turn to AUTO position. Heat trace is now controlled by the PLC based on the operation of the ambient temperature switch TSL-105.
k. Add a 10” PVC stilling well between the existing pump access ports for the new level transmitter LT-120 and the new float switch LSL-121.

l. Hydrostatic level transmitter to be installed by the On-Site WTP Operations Contractor in the bottom of the Hoodoo collection tank. SCADA Contractor to Coordinate zero and span settings with On-Site WTP Operations Contractor. Run conduit and analog cable back to the PLC analog input card in the position shown in the 13500 spreadsheet. Tag the cable LT-120.

m. New float switch to be installed by the On-Site WTP Operations Contractor in the Hoodoo collection tank along with LT-120. Coordinate with the On-Site WTP Operations Contractor to determine the low-level pump shut off point and set the float to open the contacts at that point with a falling water level. This will be the shutdown for the pump. The switch wiring can be run in the same conduit as the level transmitter wiring as both are 24 VDC. Tag the cable LSL-121.

n. Add conduit and cable from the new PLC panel to the existing genset control panel. Pick up two alarms from existing dry contacts in the genset panel. Wire these alarms to the PLC Discrete Input card in the position shown in the 13500 spreadsheet. Tag wires as shown:

YI-100:	Generator Running
XA-100:	Generator General Alarm

o. Add conduit and cable from the new PLC panel to the existing Tramont fuel unit. Add enough cable for four dry contact signals back to the PLC Discrete Input card in the positions shown in the 13500 spreadsheet. Tag wires as shown:

TAG	Service
XS-101	General Trouble Alarm
LSL-101	Low Fuel Level Switch
LSH-101A	High Fuel Level Switch
LSH-101B	Fuel in Containment Basin

p. Add conduit and cable from the new PLC panel to the existing Automatic Transfer Switch. Add cable for three dry contact signals back to the PLC Discrete Input card in the positions shown in the 13500 spreadsheet. Tag wires as shown:

XS-102	ATS General Fault Alarm
YI-102A	ATS in Normal Position
YI-102B	ATS in Emergency Position

q. Add conduit and analog cable to connect the existing flowmeter transmitter signal to its analog input to the PLC analog input card at the position shown in the 13500 spreadsheet. Label this wire FI-103.

r. Mount and connect ambient temperature switch TSL-205 to the PLC Discrete Input card at the position shown in the 13500 spreadsheet. Tag wires as shown:

TAG	Service
TSL-205	Heat Trace Activation

s. Run conduit and wires for one Discrete Input and one Discrete Output signals from the Heat Trace Panel HTP-200 to the PLC and terminate at the position shown in the 13500 spreadsheet. Tag wires as shown:

TAG	Service
HS-205	Heat Trace Activation
XA-205	Heat Trace Failure Alarm

t. Field test and accept all components and control functions.

Appendix Section E: Strawberry Pond

1. Existing Equipment Modifications

a. Pump VFD Control Changes
b. Generator monitoring, including block heater and temperature
c. Automatic Transfer Switch monitoring
d. Tramont Fuel system Monitoring
e. Discharge header piping modifications.

2. Device Additions

a. Provided by On-Site WTP Operations Contractor

1. Pond Level Transmitter
2. Pump for last chance Pond that can be integrated into the SCADA system

b. Provided by this Contract

1. PLC control cabinet with radio communication back to the water plant PLC
2. UPS for radio communications
3. Heat Trace Monitoring Panel
4. Video Camera Installation
5. Ambient low temperature switch
6. Building low temperature switch

3. Procedure

a. Mount pre-engineered and tested PLC cabinet in the Strawberry Pit electrical room.
b. Power PLC cabinet and radio. Align and install antenna for reliable communications.
c. Revise the three pump VFD panels to allow remote speed control via the PLC. Refer to drawing 00E-02 for a VFD modification example.
d. Build a heat trace panel per drawing 00E-02
e. Mount in pump building and power from an existing 120 volt power panel.
f. Permanently connect power, PLC control signals, and the heat trace to this panel. Turn ON, wait thirty minutes and adjust current switch sensitivity for dependable operation. The current switch should operate dependably when the heat trace cable is turned on and not drop out as the heat trace warms and the current drops. Adjust CT wraps, if necessary. Turn to AUTO position. Heat trace is now controlled by the PLC based on the operation of the ambient temperature switch TSL-405 and as controlled by the PLC.
g. Hydrostatic level transmitter to be installed by the On-Site WTP Operations Contractor in the Strawberry Pond. SCADA Contractor to coordinate zero and span settings with On-Site WTP Operations Contractor. Run conduit and analog cable

back to the PLC analog input card in the position shown in the 13500 spreadsheet. Tag the cable LT-403.

h. Add conduit and cable from the new PLC panel to the existing genset control panel. Pick up two alarms from existing dry contacts in the genset panel. Wire these alarms to the PLC Discrete Input card in the position shown in the 13500 spreadsheet. Tag wires as shown:

Tag	Service
YI-400:	Generator Running
XA-400:	Generator General Alarm

i. Add conduit and cable from the new PLC panel to the existing Tramont fuel unit. Add enough cable for four dry contact signals back to the PLC Discrete Input card in the positions shown in the 13500 spreadsheet. Tag wires as shown:

TAG	Service
XS-401	General Trouble Alarm
LSL-401	Low Fuel Level Switch
LSH-401A	High Fuel Level Switch
LSH-401B	Fuel in Containment Basin

j. Add conduit and cable from the new PLC panel to the existing Automatic Transfer Switch. Add cable for three dry contact signals back to the PLC Discrete Input card in the positions shown in the 13500 spreadsheet. Tag wires as shown:

Tag	Service
XS-402	ATS General Fault Alarm
YI-402A	ATS in Normal Position
YI-402B	ATS in Emergency Position

k. Mount and connect ambient temperature switch TSL-405 to the PLC Discrete Input card at the position shown in the 13500 spreadsheet. Tag wires as shown:

TAG	Service
TSL-405	Heat Trace Activation
XA-405	Heat Trace Failure

l. Mount and connect building temperature switch TSL-406 to the PC Discrete Input card at the position shown in the 13500 spreadsheet. Tag wires as shown:

TAG	Service
TSL-406	Low Building Temperature Alarm

m. Mount the video camera (CCTV4) on a support post and locate as directed by On-Site WTP Operations Contractor- Site Manager. Route the Ethernet cable in conduit from the camera to the Ethernet switch in the PLC cabinet. Ethernet switch must supply camera power by power over Ethernet.

n. Field test and accept all components and control functions.

Appendix Section F: Sunday Pit Work

1. Existing Equipment Modifications

a. Pump control changes to interface with PLC.
b. Valve control changes to interface with PLC
c. Generator monitoring, including block heater and temperature
d. Automatic Transfer Switch monitoring
e. Tramont Fuel system Monitoring

2. Device Additions

a. Provided by the On-site WTP Operations Contractor

1. Install a motorized actuator on Sunday Pit dump valve FV-301.
2. Install a motorized actuator on barge pump discharge valve FV-302.

b. Provided by this Contract

1. PLC control cabinet with radio communication back to the water plant PLC.
2. UPS for radio communications
3. Heat Trace Monitoring Panel with ambient temperature switch
4. PLC control for FV-301.
5. PLC control for FV-302.

3. Procedure

a. Mount PLC panel on the existing electrical panel backboard and power from the local 120V power panel. If no panel exists, mount a small isolation transformer to supply the 120VAC to the PLC system.
b. Build a heat trace panel per drawing 00E-02
c. Add conduit and cable from the new PLC panel to the valve actuator on FV-301. Add enough cable for four dry contact signals back to the PLC Discrete Input card and two Discrete Output signals in the positions shown in the 13500 spreadsheet. Tag wires as shown:

TAG	Service
XS-301	FV-301 Actuator Trouble Alarm
YS-301	FV-301 in Remote
ZSC-301	FV-301 Closed
ZSO-301	FV-301 Open
HS-301E	Valve open command (fail position)

HS-301E	Valve close command

d. Add conduit and cable from the new PLC panel to the valve actuator on FV-302. Add enough cable for four dry contact signals back to the PLC Discrete Input card and two Discrete Output signals in the positions shown in the 13500 spreadsheet. Tag wires as shown:

TAG	Service
XS-302	FV-302 Actuator Trouble Alarm
YS-302	FV-302 in Remote
ZSC-302	FV-302 Closed
ZSO-302	FV-302 Open
HS-302E	Valve open command
HS-302E	Valve closed command (fail position)

e. Modify the existing barge pump motor starter circuit to allow PLC control and monitoring as shown on drawing 00Y-05. Add a conduit from the new PLC panel to the starter bucket and install enough cable for three dry contact signals back to the PLC Discrete Input card and one Discrete Output signal in the positions shown in the 13500 spreadsheet. Tag wires as shown:

TAG	Service
XS-303B	P-301 Overload
YS-303A	P-301 Running
YS-303B	P-301 field switch in Remote
HS-303B	P-301 Run Command

f. Add conduit and cable from the new PLC panel to the existing genset control panel. Pick up two alarms from existing dry contacts in the genset panel. Wire these alarms to the PLC Discrete Input card in the position shown in the 13500 spreadsheet. Tag wires as shown:

Tag	Service
YI-400:	Generator Running
XA-400:	Generator General Alarm

g. Add conduit and cable from the new PLC panel to the existing Tramont fuel unit. Add enough cable for four dry contact signals back to the PLC Discrete Input card in the positions shown in the 13500 spreadsheet. Tag wires as shown:

TAG	Service
XS-401	General Trouble Alarm
LSL-401	Low Fuel Level Switch
LSH-401A	High Fuel Level Switch
LSH-401B	Fuel in Containment Basin

h. Add conduit and cable from the new PLC panel to the existing Automatic Transfer Switch. Add cable for three dry contact signals back to the PLC Discrete Input card in the positions shown in the 13500 spreadsheet. Tag wires as shown:

Tag	Service
XS-402	ATS General Fault Alarm
YI-402A	ATS in Normal Position
YI-402B	ATS in Emergency Position

i. Mount and connect ambient temperature switch TSL-405 to the PLC Discrete Input card at the position shown in the 13500 spreadsheet. Tag wires as shown:

TAG	Service
TSL-405	Heat Trace Activation
XA-405	Heat Trace Failure

j. Field test and accept all components and control functions.

Appendix Section G: Anchor Hill Pit Work

1. Existing Equipment Modifications

a. Pump Control Changes to interface with PLC.
b. Valve control changes to interface with PLC
c. Generator monitoring, including block heater and temperature
d. Automatic Transfer Switch monitoring
e. Tramont Fuel system Monitoring

2. Device Additions

a. provided by On-Site WTP Operations Contractor

1. Install a motorized actuator on barge pump recirculation valve FV-601

b. Provided by this Contract

a. PLC control cabinet with radio communication back to the water plant PLC.
b. UPS for radio communications
c. PLC control for FV-601.
d. Heat Trace Monitoring Panel

3. Procedure

a. Mount PLC panel on the existing electrical panel backboard and power from the local 120V power panel. If no panel exists, mount a small isolation transformer to supply the 120VAC to the PLC system.
b. Build a heat trace panel per drawing 00E-02
c. Add conduit and cable from the new PLC panel to the new valve actuator on FV-601. Add enough cable for four dry contact signals back to the PLC Discrete Input card and two Discrete Output signals in the positions shown in the 13500 spreadsheet. Tag wires as shown:

TAG	Service
XS-602	FV-601 Actuator Trouble Alarm
YS-602	FV-601 in Remote
ZSC-602	FV-601 Closed
ZSO-602	FV-601 Open

d. HS-602E Valve open command HS-602E Valve close command (Fail Position). Valve will open to allow recirculation in Anchor Hill Pit to prevent overflow at

Strawberry Pond from addition of Anchor Hill Pit water, in the event of a high level condition at Strawberry Pond.

e. Modify the existing barge pump motor starter circuit to allow PLC control and monitoring as shown on drawing 00Y-06. Add a conduit from the new PLC panel to the starter bucket and install enough cable for three dry contact signals back to the PLC Discrete Input card and one Discrete Output signal in the positions shown in the 13500 spreadsheet. Tag wires as shown:

TAG	Service
XS-601B	P-601 Overload
YS-601A	P-601 Running
YS-601B	P-601 field switch in Remote

f. HS-601B P-601 Run Command

g. Mount the video camera (CCTV4) on a support post and locate as directed by On-Site WTP Operations Contractor. Route the Ethernet cable in conduit from the camera to the Ethernet switch in the PLC cabinet. Ethernet switch must supply camera power by power over Ethernet.

h. Add conduit and cable from the new PLC panel to the existing genset control panel. Pick up two alarms from existing dry contacts in the genset panel. Wire these alarms to the PLC Discrete Input card in the position shown in the 13500 spreadsheet. Tag wires as shown:

Tag	Service
YI-400:	Generator Running
XA-400:	Generator General Alarm

i. Add conduit and cable from the new PLC panel to the existing Tramont fuel unit. Add enough cable for four dry contact signals back to the PLC Discrete Input card in the positions shown in the 13500 spreadsheet. Tag wires as shown:

TAG	Service
XS-401	General Trouble Alarm
LSL-401	Low Fuel Level Switch
LSH-401A	High Fuel Level Switch
LSH-401B	Fuel in Containment Basin

j. Add conduit and cable from the new PLC panel to the existing Automatic Transfer Switch. Add cable for three dry contact signals back to the PLC Discrete Input card in the positions shown in the 13500 spreadsheet. Tag wires as shown:

Tag	Service
XS-402	ATS General Fault Alarm
YI-402A	ATS in Normal Position
YI-402B	ATS in Emergency Position

k. Mount and connect ambient temperature switch TSL-405 to the PLC Discrete Input card at the position shown in the 13500 spreadsheet. Tag wires as shown:

TAG	Service
TSL-405	Heat Trace Activation
XA-405	Heat Trace Failure

k. Field test and accept all components and control functions.

Appendix Section H: Site Office

1. Existing Equipment Modifications

a. Generator monitoring including block heater and temperature
b. Automatic Transfer Switch monitoring
c. Tramont Fuel system Monitoring

2. Device Additions

a. Provided by this Contract

1. PLC control cabinet with radio communication back to the water plant PLC.
2. UPS for radio communications

3. Procedure

a. Add conduit and cable from the new PLC panel to the existing genset control panel. Pick up two alarms from existing dry contacts in the genset panel. Wire these alarms to the PLC Discrete Input card in the position shown in the 13500 spreadsheet. Tag wires as shown:

Tag	Service
YI-400:	Generator Running
XA-400:	Generator General Alarm

b. Add conduit and cable from the new PLC panel to the existing Tramont fuel unit. Add enough cable for four dry contact signals back to the PLC Discrete Input card in the positions shown in the 13500 spreadsheet. Tag wires as shown:

TAG	Service
XS-401	General Trouble Alarm
LSL-401	Low Fuel Level Switch
LSH-401A	High Fuel Level Switch
LSH-401B	Fuel in Containment Basin

c. Add conduit and cable from the new PLC panel to the existing Automatic Transfer Switch. Add cable for three dry contact signals back to the PLC Discrete Input card in the positions shown in the 13500 spreadsheet. Tag wires as shown:

Tag	Service

XS-402	ATS General Fault Alarm
YI-402A	ATS in Normal Position
YI-402B	ATS in Emergency Position

d. Field test and accept all components and control functions.

Appendix Section I: Specifications/Bidding Documents

Appendix Section J: Process Control Modifications - CDM

Additional SCADA controls to add to existing WTP control program to allow for un-manned operations.

NEW PLC PROGRAMMING

1. ADD - If the filter feed (FF) level reaches 99% then the PLC needs to turn the WTP feed pump off (Strawberry pump house). Sound both a computer alarm as well as a radio alarm.
   LOGIC – If the filter feed tank is at 99% then overflow is imminent. This means that the overflow pipe (94% - 98%) is frozen or otherwise obstructed. If the tank overflows, the plant will "flood" until water flows out the doors.
2. ADD - If the WTP inflow flow meter reads "0" while the feed pump in Strawberry pump house is running, then after 15 seconds the pump needs to be turned off. Sound both a computer alarm as well as a radio alarm.
   LOGIC – If the flow meter reads zero, then both the inlet valve and the bypass valve are closed and the feed pump is dead-heading. This must be corrected or damage to the feed pump will occur.
3. ADD - Reactor tank low-low and high-high pH alarm conditions. The pH values for these conditions should be <4.01 and >11.99 SU respectively. If either of these conditions occurs, then sound both a computer alarm as well as a radio alarm. Also, put the plant into bypass and shut the filter feed pump off.
   LOGIC – There is an obvious problem with the lime delivery --- either not enough or too much. In either case, the WTP should be bypassed until a person arrives to troubleshoot the problem.
4. ADD – Filter feed tank low-low and high-high pH alarm conditions. The pH values for these conditions should be <6.50 and >10.01 SU respectively. If either of these conditions occurs, then sound both a computer alarm as well as a radio alarm. Also, put the plant into bypass and shut the filter feed pump off.
   LOGIC – There is an obvious problem with the CO_2 delivery --- either not enough or too much. In either case the WTP should be bypassed until a person arrives to troubleshoot the problem.
5. ADD – Need to be able to reset lime silo and slaker alarms from the control room HMI. Also need to be able to restart the slaker system from the WTP control room HMI.
   LOGIC – Makes running the WTP easier. All other motors and mixers are controlled from the HMI in the control room.

CHANGE – Timer values for treated water turbidity alarm conditions. Control programming is already written, but we need to reduce the time period associated with high turbidity conditions and high-high turbidity conditions. Change to 2 minutes and 15 seconds respectively. Timers are currently set at 10 minutes and 2 minutes respectively.

LOGIC – The time allowed under these upset conditions should be lowered to better ensure water quality entering Strawberry Creek.

Appendix Section K: Rain Gauge Calculation

1. Existing equipment Modifications

1. Remove the existing rain gauge display unit.
2. Extend wires from the rain gauge on the roof to the time delay relay mounted in the PLC.

2. Device Additions

a. Provided by this contract

1. Mount the time delay relay circuit in the PLC cabinet. The circuit will be instant on, time release. It will extend the 0.1 second pulse from the rain gauge to a 2 second pulse for the PLC input. This will eliminate missed pulses.
2. Connect a normally open contact from the timer relay to a digital input to the PLC.
3. Consider a Koyo model KT-V4S-C-D set up as a one shot. See sketch below.
4. Programming will be added to the local PLC as detailed in this document.

3. PLC Work

The rain gauge subroutine will emulate the local display unit of the rain sensor. The benefit of moving this to the PLC is for display flexibility and historical records. This data will also be available for reports, if desired.

1. Display Workup:
    a. Display instantaneous rainfall in inches/hour, updated every 2 minutes.
    b. Display total inches/day from midnight to midnight.
    c. Display total inches/week from Sunday to Sunday.
    d. Display total inches/month from first to last day at midnight.
    e. Display total inches/year from January 1st to December 31st.
2. Generate a graphic page showing these points and a graph of per week rain totals.
3. Make this data available for trending and reporting as well as stored in the data historian.

4. Mathematics

Rain Gauge Constant: 1 pulse = 0.01” of rain.

(Total # pulses)/(100*time) = inches of rain/unit of time

To show inches of rain per hour at two-minute intervals:

(#counts in two minutes)(0.3) = inches/hr.

The remaining are totalized values:

(Total Counts from Midnight to Midnight)*(0.01) = Daily Total.

(Total Counts from Sunday Midnight to Sunday Midnight)*(0.01) = Weekly Total.

(Total Counts from first to last day of month, at Midnight)*(0.01) = Monthly Total.

(Total Counts from January 1st at Midnight to December 31st at Midnight) = Yearly Total

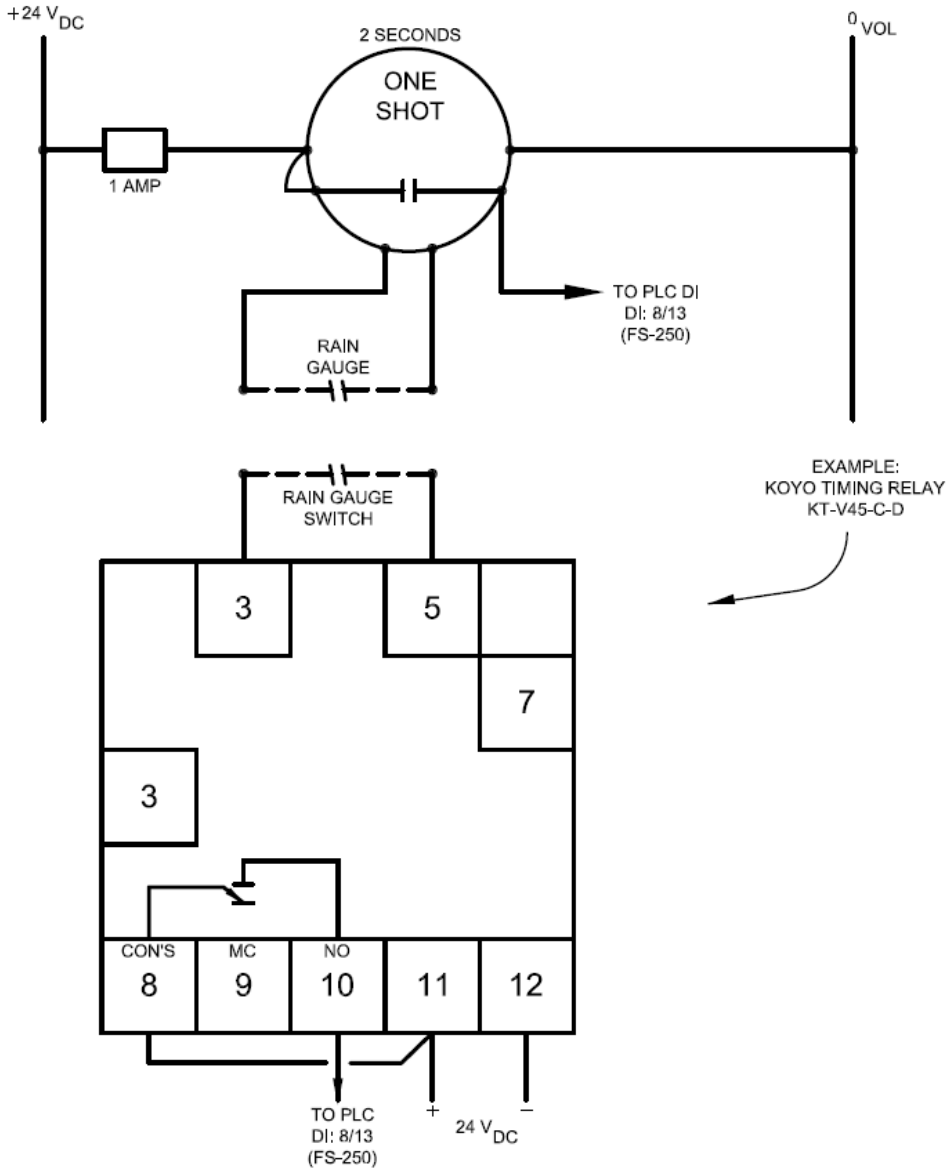

Appendix Section L: New Site P&IDs

Appendix Section M: Water Plant PIDs

Appendix Section N: Site Reference Documentation

2014/10/13

SECTION 01010

SUMMARY OF WORK

PART 1 - GENERAL

1.1 SUMMARY

A. Section Includes:
   1. Work covered by the Contract Documents.
   2. Type of the Contract.
   3. Work under other contracts.
   4. Use of premises.
   5. Owner's occupancy requirements.
   6. Work restrictions.

B. Related Specification Sections include but are not necessarily limited to:
   1. Division 00 - Bidding Requirements, Contract Forms, and Conditions of the Contract.
   2. Division 01 - General Requirements.

1.2 WORK COVERED BY CONTRACT DOCUMENTS

A. Project Identification: Gilt Edge Superfund Site SCADA Integration of Existing Water Collection, Conveyance and Treatment Systems.

B. Address: 4 miles SE of Lead, SD 57754.

C. Owner: EPA Region 8/SD DENR.

D. Engineer for SCADA Addition: HDR, Inc., 6300 S. Old Village Place, Suite 100 –Sioux Falls, SD 57108-2102.

E. The Work Consists of the Following:
   1. Providing SCADA monitoring and control to the existing water collection, conveyance and treatment systems at the Gilt Edge Mine Superfund Site to allow for un-attended operation of the existing facilities. The mine is no longer operating and the water collection and treatment systems are currently being operated be CDM under a contract operations agreement with the EPA and SD DENR.
   2. The work primarily includes software, programming for remote operation as described in the attached document and specifications, a new HMI at the Water Treatment Plant, portable HMI for remote monitoring and operation, and specified backpanels (complete with components installed and tested prior to delivery) to be installed into panels supplied and installed by others. These backpanels will be installed by the SCADA integrator.
   3. Other equipment and work described in the supporting documentation is for reference and will be provided by others, including such items as:
      a. Primary Elements (i.e. flow monitoring, level indication, proximity switches, etc.)
      b. Pumps
      c. Video Cameras
   4. All conduit, wiring and control panels will be provided and installed by others.
   5. The radio path study will be conducted by others and along with the radios, antennas, and towers or poles required for mounting of antennas.
   6. Any components to be on the fabricated backpanels specified are to be provided and installed with this work by the systems integrator.

1.3 TYPE OF CONTRACT

A. Project will be constructed under a single prime contract.

1.4 WORK PHASING

A. The Work will be conducted in a manner to assure the normally uninterrupted operation of the existing pumping and treatment systems. Intermittent, short-duration interruptions may be allowed on a case-by-case basis as coordinated with the site operations.

B. Before commencing Work in each area, submit a schedule showing the proposed timeframe in which the work in that area will be performed.

1.5 USE OF PREMISES

A. General: Contractor shall have limited use of premises for construction operations as indicated by the Contract Documents.

B. Use of Site: Limit use of premises to work in areas indicated. Do not disturb portions of Project site beyond areas in which the Work is indicated.
   1. Limits: Confine construction operations to immediate areas described in the attached document.
   2. Operations Occupancy: Allow for continuous Operations occupancy of Project site.
   3. Driveways and Entrances: Keep driveways, parking, loading areas, and entrances serving premises clear and available to Owner, Owner's employees, and emergency vehicles at all times. Do not use these areas for parking or storage of materials.
   4. Due to the nature of the Work included in this project, deliveries are assumed to not be required. The limited components to be provided (HMI's & backpanels) will be brought on site by the systems integrator.

1.6 OWNER'S OCCUPANCY REQUIREMENTS

A. Full Owner Occupancy: Owner will occupy site during entire construction period. Cooperate with Owner during construction operations to minimize conflicts and facilitate Owner usage. Perform the Work so as not to interfere with Owner's day-to-day operations. Maintain existing exits, unless otherwise indicated.
   1. Maintain access to existing walkways, corridors, and other adjacent occupied or used facilities. Do not close or obstruct walkways, corridors, or other occupied or used facilities without written permission from Owner and authorities having jurisdiction.
   2. Provide not less than 48 HRS notice to Owner of activities that will affect Owner's operations.

B. Owner Occupancy of Completed Areas of Construction: Owner reserves the right to occupy and to place and install equipment in completed areas of building, before Substantial Completion, provided such occupancy does not interfere with completion of the Work. Such placement of equipment and partial occupancy shall not constitute acceptance of the total Work.

1.7 WORK RESTRICTIONS

A. On-Site Work Hours: Work shall be generally performed inside the existing building during normal business working hours of ____ AM to _____ PM, Monday through Friday, except otherwise indicated.
   1. Weekend Hours: With prior written approval of the Owner.
   2. Early Morning Hours: With prior written approval of the Owner.

B. Existing Utility Interruptions: Do not interrupt utilities serving facilities occupied by Owner or others unless permitted under the following conditions and then only after arranging to provide temporary utility services according to requirements indicated:
   1. Notify Owner not less than 48 hours in advance of proposed utility interruptions.
   2. Do not proceed with utility interruptions without Owner's written permission.

PART 2 - PRODUCTS - (NOT APPLICABLE TO THIS SPECIFICATION SECTION)

PART 3 - EXECUTION - (NOT APPLICABLE TO THIS SPECIFICATION SECTION)

END OF SECTION

2013/11/01

SECTION 01060
SPECIAL CONDITIONS

PART 1 - GENERAL

1.1 SUMMARY

A. Section Includes:
   1. Administrative and procedural requirements for:
      a. Preconstruction Conference.
      b. Project signs.
      c. Contractor's Superintendent's Field Office.
      d. Engineer's Field Office.
      e. Drawings and Contract Documents for Contractor use.
      f. Project photographs.
      g. Testing.
      h. Schedule of Values.
      i. Project meetings.
      j. Special considerations related to adjacent properties and facilities.
      k. Historical and archaeological finds.

B. Related Specification Sections include but are not necessarily limited to:
   1. Division 00 - Bidding Requirements, Contract Forms, and Conditions of the Contract.
   2. Division 01 - General Requirements.

1.2 PRECONSTRUCTION CONFERENCE

A. A preconstruction conference shall be held at the Gilt Edge Mine after award of Contract.
   1. Engineer will notify the Contractor as to the date and time of the conference two (2) weeks in advance of the proposed date.
   2. Contractor's Project Manager and Project Superintendent and Contractor's Subcontractor Representatives shall attend.

1.3 PROJECT SIGNS

A. Engineer's Sign: None.

B. Contractor's Standard Company Sign: None.

1.4 CONTRACTOR'S SUPERINTENDENT'S FIELD OFFICE/REQUIRED FACILITIES

A. Field office not required.

B. Equipment Required: Telephone (superintendent cell phone is acceptable) and sanitary facilities (portable is acceptable and recommended for moving between work sites).

C. Assure contact to the superintendent is possible via telephone and access is available to the field office during the normal working day.

D. On site, maintain complete field file of Shop Drawings, posted Contract Drawings and Specifications, and other files of field operations including provisions for maintaining "As Recorded Drawings."

E. If a field office is used, remove field office from site upon acceptance of the entire work by the Owner.

1.5 ENGINEER'S FIELD OFFICE

A. Not Required.

1.6 RFP DOCUMENTS FOR CONTRACTOR USE

A. Refer to General Conditions.

B. Contractor shall pick up all "no-charge" RFP documents within 10 days from date of Notice to Proceed.

C. Additional documents after "no-charge" documents will be furnished to Contractor at cost.

1.7 PROJECT MEETINGS

A. Construction Meetings:
   1. The Contractor will conduct construction meetings involving:
      a. Contractor's project manager and/or project superintendent.
      b. Owner's designated representative(s).
      c. DENR or EPA's designated representative(s).
      d. Contractor's subcontractors as appropriate to the Work in progress.
   2. Weekly brief planning meetings will be held during active site work to discuss the week's upcoming activities and potential impacts to the pumping and treatment processes..
   3. The Contractor will take meeting minutes and submit copies of meeting minutes to participants and designated recipients identified at the Preconstruction Conference.
      a. Corrections, additions or deletions to the minutes shall be noted and addressed at the following meeting.
   4. The meetings will be at a mutually agreed upon time by the Contractor and Site Operations.

PART 2 - PRODUCTS - (NOT APPLICABLE TO THIS SPECIFICATION SECTION)

PART 3 - EXECUTION - (NOT APPLICABLE TO THIS SPECIFICATION SECTION)

END OF SECTION

2013/11/01

SECTION 01340
SUBMITTALS

PART 1 - GENERAL

1.1 SUMMARY

A. Section Includes:
1. Mechanics and administration of the submittal process for:
   a. Shop Drawings.
   b. Samples.
   c. Informational submittals.
2. General content requirements for Shop Drawings.

B. Related Specification Sections include but are not necessarily limited to:
1. Division 00 - Bidding Requirements, Contract Forms, and Conditions of the Contract.
2. Division 01 - General Requirements.
3. Operations and Maintenance Manual submittal requirements are specified in Specification Section 01340.
4. Specification Sections in Division 02 through Division 16 identifying required submittals.

1.2 DEFINITIONS

A. Shop Drawings:
1. See General Conditions.
2. Product data and samples are Shop Drawing information.
3. Initial and Revised Construction Baseline Schedules.

B. Informational Submittals:
1. Submittals other than Shop Drawings and samples required by the Contract Documents that do not require approval.
2. Representative types of informational submittal items include but are not limited to:
   a. Construction Record Schedules (progress schedules).
   b. Warranties.
   c. Survey data.
3. For-Information-Only submittals upon which the Engineer is not expected to conduct review or take responsive action may be so identified in the Contract Documents.

1.3 SUBMITTAL SCHEDULE

A. Schedule of Shop Drawings:
1. Submitted and approved within 20 days of receipt of Notice to Proceed.
2. Account for multiple transmittals under any Specification Section where partial submittals will be transmitted.
3. Submittal and approval prior to 50 percent completion.

1.4 PREPARATION OF SUBMITTALS

A. Legibility:
1. All submittals and all pages of all copies of a submittal shall be completely legible.
2. Submittals which, in the Engineer's sole opinion, are illegible will be returned without review.

B. Shop Drawings and Samples:
1. Scope of any submittal and letter of transmittal:
   a. Limited to one (1) Specification Section.

b. Do not submit under any Specification Section entitled (in part) "Basic Requirements" unless the product or material submitted is specified, in total, in a "Basic Requirements" Specification Section.

2. Numbering letter of transmittal:
   a. Use the Specification Section number followed by a series number ("-xx" and beginning with "01"); increase the series number sequentially with each additional transmittal for that Specification Section.
3. Describing transmittal contents:
   a. Provide listing of each component or item in submittal capable of receiving an independent review action.
   b. Identify for each item:
      1) Manufacturer and Manufacturer's Drawing or data number.
      2) Contract Document tag number(s).
      3) Unique page numbers for each page of each separate item.
   c. When submitting "or-equal" items that are not the products of named manufacturers, include the words "or-equal" in the item description.
4. Contractor certification of review and approval:
   a. Contractor's review and approval certification stamp shall be applied either to the letter of transmittal or a separate sheet preceding each independent item in the submittal.
      1) Stamp may be either a wet ink stamp or electronically embedded.
      2) Clearly identify the person who reviewed the submittal and the date it was reviewed.
      3) Shop Drawing submittal stamp shall read "(Contractor's Name) has satisfied Contractor's obligations under the Contract Documents with respect to Contractor's review and approval as stipulated in the General Conditions."
5. Resubmittals:
   a. Number with original Specification Section and series number with a suffix letter starting with "A" on a (new) duplicate transmittal form.
   b. Do not increase the scope of any prior transmittal.
   c. Account for all components of prior transmittal.
      1) If items in prior transmittal received "A" or "B" Action code, list them and indicate "A" or "B" as appropriate.
         a) Do not include submittal information for items listed with prior "A" or "B" Action in resubmittal.
      2) Indicate "Outstanding-To Be Resubmitted At a Later Date" for any prior "C" or "D" Action item not included in resubmittal.
         a) Obtain Engineer's approval to exclude items.
6. For 8-1/2 x 11 IN, 8-1/2 x 14 IN, and 11 x 17 IN size sheets, provide five (5) copies of each submittal for Engineer plus the number required by the Contractor.
   a. The number of copies required by the Contractor will be defined at the Preconstruction Conference, but shall not exceed three (3).
7. Contractor shall use green color for marks on transmittals.
   a. Duplicate all marks on all copies transmitted, and ensure marks are photocopy reproducible.
   b. Engineer will use red marks or enclose marks in a cloud.
8. Transmittal contents:
   a. Coordinate and identify Shop Drawing contents so that all items can be easily verified by the Engineer.
   b. Provide submittal information or marks defining specific equipment or materials utilized on the Project.
      1) Generalized product information, not clearly defining specific equipment or materials to be provided, will be rejected.
   c. Identify material project application, tag number, Drawing detail reference, weight, and other Project specific information.

d. Provide sufficient information together with technical cuts and technical data to allow an evaluation to be made to determine that the item submitted is in compliance with the Contract Documents.

e. Submit items such as equipment brochures, cuts of fixtures, product data sheets or catalog sheets on 8-1/2 x 11 IN pages.

1) Indicate exact item or model and all options proposed.

f. When a Shop Drawing submittal is called for in any Specification Section, include as appropriate, scaled details, sizes, dimensions, performance characteristics, capacities, test data, anchoring details, installation instructions, storage and handling instructions, color charts, layout Drawings, rough-in diagrams, wiring diagrams, controls, weights and other pertinent data in addition to information specifically stipulated in the Specification Section.

1) Arrange data and performance information in format similar to that provided in Contract Documents.

2) Provide, at minimum, the detail specified in the Contract Documents.

g. If proposed materials deviate from the Contract Drawings or Specifications in any way, clearly note the deviation and justify the said deviation in detail in a separate letter immediately following transmittal sheet.

C. Informational Submittals:

1. Prepare in the format and detail specified in Specification requiring the informational submittal.

1.5 TRANSMITTAL OF SUBMITTALS

A. Shop Drawings and Samples:

1. Transmit all submittals to:

HDR
6300S. Old Village Place
Sioux Falls, SD 57108
Attn: Allan Erickson

2. Utilize one (1) copy of attached Exhibit A to transmit all Shop Drawings.
3. All submittals must be from Contractor.

a. Submittals will not be received from or returned to subcontractors.

B. Informational Submittals:

1. Transmit under Contractor's standard letter of transmittal or letterhead.
2. Submit in triplicate or as specified in individual Specification Section.
3. Transmit to:

HDR
6300S. Old Village Place
Sioux Falls, SD 57108
Attn: Allan Erickson

C. Electronic Transmission of Submittals:

1. Transmittals maybe made electronically.

a. Use email.

b. Protocols and processes will be determined at the Pre-Construction Conference.

2. Scan all transmittals into Adobe Acrobat Portable Document Format (PDF), latest version, with printing enabled.

a. Do not password protect or lock the PDF document.

b. Rotate sheets that are normally viewed in landscape mode so that when the PDF file is opened the sheet is in the appropriate position for viewing.

3. Required signatures may be applied prior to scanning for transmittal.

1.6 ENGINEER'S REVIEW ACTION

A. Shop Drawings and Samples:
   1. Items within transmittals will be reviewed for overall design intent and will receive one (1) of the following actions:
      a. A - FURNISH AS SUBMITTED.
      b. B - FURNISH AS NOTED (BY ENGINEER).
      c. C - REVISE AND RESUBMIT.
      d. D - REJECTED.
      e. E - ENGINEER'S REVIEW NOT REQUIRED.
   2. Submittals received will be initially reviewed to ascertain inclusion of Contractor's approval stamp.
      a. Submittals not stamped by the Contractor or stamped with a stamp containing language other than that specified herein will not be reviewed for technical content and will be returned without any action.
   3. In relying on the representation on the Contractor’s review and approval stamp, Owner and Engineer reserve the right to review and process poorly organized and poorly described submittals as follows:
      a. Submittals transmitted with a description identifying a single item and found to contain multiple independent items:
         1) Review and approval will be limited to the single item described on the transmittal letter.
         2) Other items identified in the submittal will:
            a) Not be logged as received by the Engineer.
            b) Be removed from the submittal package and returned without review and comment to the Contractor for coordination, description and stamping.
            c) Be submitted by the Contractor as a new series number, not as a re-submittal number.
      b. Engineer, at Engineer’s discretion, may revise the transmittal letter item list and descriptions, and conduct review.
         1) Unless Contractor notifies Engineer in writing that the Engineer’s revision of the transmittal letter item list and descriptions was in error, Contractor’s review and approval stamp will be deemed to have applied to the entire contents of the submittal package.
   4. Submittals returned with Action "A" or "B" are considered ready for fabrication and installation.
      a. If for any reason a submittal that has an "A" or "B" Action is resubmitted, it must be accompanied by a letter defining the changes that have been made and the reason for the resubmittal.
      b. Destroy or conspicuously mark "SUPERSEDED" all documents having previously received "A" or "B" Action that are superseded by a resubmittal.
   5. Submittals with Action "A" or "B" combined with Action "C" (Revise and Resubmit) or "D" (Rejected) will be individually analyzed giving consideration as follows:
      a. The portion of the submittal given "C" or "D" will not be distributed (unless previously agreed to otherwise at the Preconstruction Conference).
         1) One (1) copy or the one (1) transparency of the "C" or "D" Drawings will be marked up and returned to the Contractor.
            a) Correct and resubmit items so marked.
      b. Items marked "A" or "B" will be fully distributed.
      c. If a portion of the items or system proposed are acceptable, however, the major part of the individual Drawings or documents are incomplete or require revision, the entire submittal may be given "C" or "D" Action.
         1) This is at the sole discretion of the Engineer.
         2) In this case, some Drawings may contain relatively few or no comments or the statement, "Resubmit to maintain a complete package."

3) Distribution to the Owner and field will not be made (unless previously agreed to otherwise).

6. Failure to include any specific information specified under the submittal paragraphs of the Specifications will result in the submittal being returned to the Contractor with "C" or "D" Action.
7. Calculations required in individual Specification Sections will be received for information purposes only, as evidence calculations have been performed by individuals meeting specified qualifications, and will be returned stamped "E. Engineer's Review Not Required" to acknowledge receipt.
8. All costs, associated with the review of any Shop Drawing resubmitted more than twice shall be borne by the Contractor with said costs being deducted from the Contract Price.
9. Transmittals of submittals which the Engineer considers as "Not Required" submittal information, which is supplemental to but not essential to prior submitted information, or items of information in a transmittal which have been reviewed and received "A" or "B" action in a prior submittal, will be returned with action "E. Engineer's Review Not Required."
10. Samples may be retained for comparison purposes.
    a. Remove samples when directed.
    b. Include in bid all costs of furnishing and removing samples.
11. Approved samples submitted or constructed, constitute criteria for judging completed work.
    a. Finished work or items not equal to samples will be rejected.

PART 2 - PRODUCTS – (NOT APPLICABLE TO THIS SPECIFICATION SECTION)

PART 3 - EXECUTION – (NOT APPLICABLE TO THIS SPECIFICATION SECTION)

1

HDR

EXHIBIT A **Shop Drawing Transmittal No.**

_____-_____

(Spec Section) (Series)

Project Name:		Date Received:	
Project Owner:		Checked By:	
Contractor:	HDR Engineering, Inc.	Log Page:	
Address:	Address:	HDR No.:	
		Spec Section:	
		Drawing/Detail No.:	
Attn:	Attn:	1st. Sub	ReSub.
Date Transmitted:	Previous Transmittal Date:		

Item No.	No. Copies	Description	Manufacturer	Mfr/Vendor Dwg or Data No.	Action Taken*

Remarks:

* The Action designated above is in accordance with the following legend:

A - Furnish as Submitted

B - Furnish as Noted

C - Revise and Submit
1. Not enough information for review.
2. No reproducibles submitted.
3. Copies illegible.
4. Not enough copies submitted.
5. Wrong sequence number.
6. Wrong resubmittal number.
7. Wrong spec. section.
8. Wrong form used.
9. See comments.

D - Rejected

E - Engineer's review not required
1. Submittal not required.
2. Supplemental Information. Submittal retained for informational purposes only.
3. Information reviewed and approved on prior submittal.
4. See comments.

Engineer's review and approval is limited to determine whether items covered by this submittal will, after installation or incorporation in the Work, conform in general to the information given in the Contract Documents and be compatible with the design concept of the completed Project as a functioning whole. Any deviation from plans or specifications not depicted in the submittal or included but not clearly noted by the Contractor may not have been reviewed. Review by the Engineer shall not serve to relieve the Contractor of the contractual responsibility for any error or deviation from contract requirements.

Comments:

By Date

Distribution: Contractor File Field Owner Other

Copyright 1991-2013 HDR Engineering, Inc. - Revised Jun 1997, Oct 2001, Nov 2007, Oct 2011

2

EXHIBIT AA

Contractor's Submittal Certification

Shop Drawing Transmittal No.: _____

Contract/Project Name: _____

_____

Company Name: _____

has

1. reviewed and coordinated this Shop Drawing or Sample with other Shop Drawings and Samples and with the requirements of the Work and the Contract Documents;

2. determined and verified all field measurements, quantities, dimensions, specified performance and design criteria, installation requirements, materials, catalog numbers, and similar information with respect thereto;

3. determined and verified the suitability of all materials offered with respect to the indicated application, fabrication, shipping, handling, storage, assembly, and installation pertaining to the performance of the Work; and

4. determined and verified all information relative to Contractor's responsibilities for means, methods, techniques, sequences, and procedures of construction, and safety precautions and programs incident thereto.

☐ This Submittal **does not** contain any variations from the requirements of the Contract Documents.

☐ This Submittal **does** contain variations from the requirements of the Contract Documents. A separate description of said variations and a justification for them is provided in an attachment hereto identified as:

"Shop Drawing Transmittal No. _____Variation and Justification Documentation"

Insert picture file or electronic signature of Authorized Representative

_____ _____

Authorized Representative Date

Copyright 1991-2013 HDR Engineering, Inc. - Revised Oct 2011

Revision Log

END OF SECTION

SECTION 01601
JOB CONDITIONS

PART 1 - GENERAL

1.1 SUMMARY

A. Section Includes:
   1. Job conditions.

B. Related Specification Sections include but are not necessarily limited to:
   1. Division 00 - Bidding Requirements, Contract Forms, and Conditions of the Contract.
   2. Division 01 - General Requirements.

1.2 PROJECT CONDITIONS

A. Prior to installation of material, equipment and other work, verify with supplier and installer of the panels or other equipment, that the substrate or surface to which those materials attach is acceptable for installation of those materials or equipment. (Substrate is defined as building surfaces to which materials or equipment is attached to i.e., panels, floors, walls, ceilings, etc.).

B. Notify supplier/installer of any unacceptable substrate prior to installation of components provided in this project.

C. Maintaining Facility Operations: See Section 01010 – Description of Work

1.3 SITE CONDITIONS

A. The site is a Superfund site that is an inactive mine where acidic acid mine drainage is collected and treated.

B. The following is from the EPA's webpage describing the site, conditions and remediation work
   1. Site Risk: "*Sulfide waste rock and exposed ore zones contain sulfate and heavy metals, including arsenic, cadmium, chromium, copper, lead, nickel, silver and zinc, which generate acid mine drainage or contaminated leachate when exposed to oxygen and water. Elevated nitrates and cyanide were also present in heap leach residues.*" and "*Currently the transport of contaminants off site is controlled through the use of a high density sludge water treatment plant; the site presents no immediate threat to human health.*"
   2. Further information on the site and remediation activities can be found at: http://www2.epa.gov/region8/gilt-edge-mine

PART 2 - PRODUCTS – (NOT APPLICABLE TO THIS SPECIFICATION SECTION)

PART 3 - EXECUTION – (NOT APPLICABLE TO THIS SPECIFICATION SECTION)

END OF SECTION

2014/05/30

SECTION 10400
IDENTIFICATION DEVICES

PART 1 - GENERAL

1.1 SUMMARY

A. Section Includes:
   1. Tag, tape and stenciling systems for equipment and similar items, and hazard and safety signs.

B. Related Specification Sections include but are not necessarily limited to:
   1. Division 00 - Bidding Requirements, Contract Forms, and Conditions of the Contract.
   2. Division 01 - General Requirements.

1.2 QUALITY ASSURANCE

A. Referenced Standards:
   1. Instrumentation, Systems, and Automation Society (ISA).
   2. National Electrical Manufacturers Association/American National Standards Institute (NEMA/ANSI):
      a. Z535.2, Environmental and Facility Safety Signs.
      b. Z535.3, Criteria for Safety Symbols.
      c. Z535.4, Product Safety Signs and Labels.
   3. National Fire Protection Association (NFPA):
      a. 70, National Electrical Code (NEC).
   4. Occupational Safety and Health Administration (OSHA):
      a. 29 CFR 1910.145, Specification for Accident Prevention Signs and Tags.

1.3 SUBMITTALS

A. Shop Drawings:
   1. See Specification Section 01340 for requirements for the mechanics and administration of the submittal process.
   2. Product technical data including:
      a. Catalog information for all identification systems.
      b. Acknowledgement that products submitted meet requirements of standards referenced.
   3. Identification register, listing all items in PART 3 of this Specification Section to be identified, type of identification system to be used, lettering, location and color.

PART 2 - PRODUCTS

2.1 ACCEPTABLE MANUFACTURERS

A. Subject to compliance with the Contract Documents, the following manufacturers are acceptable:
   1. W.H. Brady Co.
   2. Panduit.
   3. Seton.
   4. National Band and Tag Co.
   5. Carlton Industries, Inc.

B. Submit request for substitution in accordance with Specification Section 01640.

2.2 MANUFACTURED UNITS

A. Type A1 - Round Metal Tags:
   1. Materials:
      a. Aluminum or stainless steel.
      b. Stainless steel shall be used in corrosive environments.
   2. Size:
      a. Diameter: 1-1/2 IN minimum.
      b. Thickness: 0.035 IN (20 GA) minimum.
   3. Fabrication:
      a. 3/16 IN minimum mounting hole.
      b. Legend: Stamped and filled with black coloring.
   4. Color: Natural.

B. Type A2 - Rectangle Metal Tags:
   1. Materials: Stainless steel.
   2. Size:
      a. 3-1/2 IN x 1-1/2 IN minimum.
      b. Thickness: 0.036 IN (20 GA) minimum.
   3. Fabrication:
      a. 3/16 IN minimum mounting hole.
      b. Legend: Stamped and filled with black coloring.
   4. Color: Natural.

C. Type A3 - Metal Tape Tags:
   1. Materials: Aluminum or stainless steel.
   2. Size:
      a. Width 1/2 IN minimum.
      b. Length as required by text.
   3. Fabrication:
      a. 3/16 IN minimum mounting hole.
      b. Legend: Embossed.
   4. Color: Natural.

D. Type B1- Square Nonmetallic Tags:
   1. Materials: Fiberglass reinforced plastic.
   2. Size:
      a. Surface: 2 x 2 IN minimum.
      b. Thickness: 100 mils.
   3. Fabrication:
      a. 3/16 IN mounting hole with metal eyelet.
      b. Legend: Preprinted and permanently embedded and fade resistant.
   4. Color:
      a. Background: Manufacturer standard or as specified.
      b. Lettering: Black.

E. Type B2 - Nonmetallic Signs:
   1. Materials: Fiberglass reinforced or durable plastic.
   2. Size:
      a. Surface: As required by text.
      b. Thickness: 60 mils minimum.
   3. Fabrication:
      a. Rounded corners.
      b. Drilled holes in corners with grommets.
      c. Legend: Preprinted, permanently embedded and fade resistant for a 10 year minimum outdoor durability.
   4. Color:
      a. Background: Manufacturer standard or as specified.

b. Lettering: Black.

5. Standards for OSHA signs: NEMA/ANSI Z535.1, NEMA/ANSI Z535.2, NEMA/ANSI Z535.3, NEMA/ANSI Z535.4, OSHA 29 CFR 1910.145.

F. Type C - Phenolic Name Plates:
1. Materials: Phenolic.
2. Size:
a. Surface: As required by text.
b. Thickness: 1/16 IN.
3. Fabrication:
a. Two (2) layers laminated.
b. Legend: Engraved through top lamination into bottom lamination.
c. Two (2) drilled side holes, for screw mounting.
4. Color: Black top surface, white core, unless otherwise indicated.

G. Type D - Self-Adhesive Tape Tags and Signs:
1. Materials: Vinyl tape or vinyl cloth.
2. Size:
a. Surface: As required by text.
b. Thickness: 5 mils minimum.
3. Fabrication:
a. Indoor/Outdoor grade.
b. Weather and UV resistant inks.
c. Permanent adhesive.
d. Legend: Preprinted.
e. Wire markers to be self-laminating.
4. Color: White with black lettering or as specified.
5. Standards for OSHA signs: NEMA/ANSI Z535.1, NEMA/ANSI Z535.2, NEMA/ANSI Z535.3, NEMA/ANSI Z535.4, OSHA 29 CFR 1910.145.

H. Type E - Heat Shrinkable Tape Tags:
1. Materials: Polyolefin.
2. Size: As required by text.
3. Fabrication:
a. Legend: Preprinted.
4. Color: White background, black printing.

I. Type F - Underground Warning Tape:
1. Materials: Polyethylene.
2. Size:
a. 6 IN wide (minimum).
b. Thickness: 3.5 mils.
3. Fabrication:
a. Legend: Preprinted and permanently imbedded.
b. Message continuous printed.
c. Tensile strength: 1750 psi.
4. Color: As specified.

J. Type G - Stenciling System:
1. Materials:
a. Exterior type stenciling enamel.
b. Either brushing grade or pressurized spray can form and grade.
2. Size: As required.
3. Fabrication:
a. Legend: As required.
4. Color: Black or white for best contrast.

K. Underground Tracer Wire:
1. Materials:
a. Wire:
1) 12 GA AWG.
2) Solid.
b. Wire nuts: Waterproof type.
c. Split bolts: Brass.

2.3 ACCESSORIES

A. Fasteners:
1. Bead chain: #6 brass, aluminum or stainless steel.
2. Plastic strap: Nylon, urethane or polypropylene.
3. Screws: Self-tapping, stainless steel.
4. Adhesive, solvent activated.

2.4 MAINTENANCE MATERIALS

A. Where stenciled markers are provided, clean and retain stencils after completion and include in extra stock, along with required stock of paints and applicators.

PART 3 - EXECUTION

3.1 GENERAL INSTALLATION

A. Install identification devices at specified locations.

B. All identification devices to be printed by mechanical process, hand printing is not acceptable.

C. Attach tags to equipment with sufficient surface or body area with solvent activated adhesive applied to back of each tag.

D. Attach tags with 1/8 IN round or flat head screws to equipment without sufficient surface or body area, or porous surfaces.
1. Where attachment with screws should not or cannot penetrate substrate, attach with plastic strap.

E. Single items of equipment enclosed in a housing or compartment to be tagged on outside of housing.
1. Several items of equipment mounted in housing to be individually tagged inside the compartment.

F. Tracer Wire:
1. Attach to pipe at a maximum of 10 FT intervals with tape or tie-wraps.
2. Continuous pass from each valve box and above grade at each structure.
3. Coil enough wire at each valve box to extend wire a foot above the ground surface.
4. 1,000 FT maximum spacing between valve boxes.
5. If split bolts are used for splicing, wrap with electrical tape.
6. If wire nuts are used for splicing, knot wire at each splice point leaving 6 IN of wire for splicing.
7. Use continuous strand of wire between valve box where possible.
a. Continuous length shall be no shorter than 100 FT.

3.2 SCHEDULES

A. Process Systems:
1. General:
a. Provide arrows and markers on piping.
1) At 20 FT maximum centers along continuous lines.
2) At changes in direction (route) or obstructions.

3) At valves, risers, "T" joints, machinery or equipment.
4) Where pipes pass through floors, walls, ceilings, cladding assemblies and like obstructions provide markers on both sides.

b. Position markers on both sides of pipe with arrow markers pointing in flow direction.
1) If flow is in both directions use double headed arrow markers.

c. Apply tapes and stenciling in uniform manner parallel to piping.

2. Trenches with piping:
a. Tag type: Type F - Underground Warning Tape.
b. Location: Halfway between top of piping and finished grade.
c. Letter height: 1-1/4 IN minimum.
d. Natural gas or digester gas:
1) Color: Yellow with black letters.
2) Legend:
a) First line: “CAUTION CAUTION CAUTION.”
b) Second line: “BURIED GAS LINE BELOW.”

e. Potable water:
1) Color: Blue with black letters.
2) Legend:
a) First line: “CAUTION CAUTION CAUTION.”
b) Second line: “BURIED WATER LINE BELOW.”

f. Storm and sanitary sewer lines:
1) Color: Green with black letters.
2) Legend:
a) First line: “CAUTION CAUTION CAUTION.”
b) Second line: “BURIED SEWER LINE BELOW.”

g. (Nonpotable) water piping, except 3 IN and smaller irrigation pipe:
1) Color: Green with black letters.
2) Legend:
a) First line: “CAUTION CAUTION CAUTION”
b) Second line: “BURIED NONPOTABLE WATER LINE BELOW.”

h. Chemical feed piping (e.g., chlorine solution, polymer solution, caustic solution, etc.):
1) Color: Yellow with black letters.
2) Legend:
a) First line: “CAUTION CAUTION CAUTION.”
b) Second line: “BURIED CHEMICAL LINE BELOW.”

i. Other piping (e.g., compressed air, irrigation, refrigerant, heating water, etc.):
1) Color: Yellow with black letters.
2) Legend:
a) First line: “CAUTION CAUTION CAUTION.”
b) Second line: “BURIED PIPE LINE BELOW.”

3. Yard valves, buried, with valve box and concrete pad:
a. Tag type: Type A2 - Rectangle Metal Tags.
b. Fastener: 3/16 IN x 7/8 IN plastic screw anchor with 1 IN #6 stainless steel pan head screw.
c. Legend:
1) Letter height: 1/4 IN minimum.
2) Valve designation as indicated on the Drawings (e.g., “V-xxx”).

4. Valves and slide gates:
a. Tag type:
1) Outdoor locations: Type B1 - Square Nonmetallic Tags.
2) Indoor noncorrosive:
a) Type A1 - Round Metal Tags.
b) Type B1 - Square Nonmetallic Tags.
3) Indoor corrosive:
a) Stainless steel Type A1 - Round Metal Tags.
b) Type B1 - Square Nonmetallic Tags.

b. Fastener:
    1) Type A1: Chain of the same material.
    2) Type B1: Stainless steel chain.
c. Color: Per ASME A13.1 corresponding to the piping system.
d. Legend:
    1) Letter height: 1/4 IN minimum.
    2) Valve designation as indicated on the Drawings (e.g., “V-xxx”).

5. Process equipment (e.g., pumps, pump motors, blowers, air compressors, bar screens, clarifier drive mechanism, etc.):
    a. Tag type:
        1) Type B2 - Nonmetallic Signs.
        2) Type D - Self-Adhesive Tape Tags and Signs.
        3) Type G - Stenciling System.
    b. Fastener:
        1) Self.
        2) Screws.
        3) Adhesive.
    c. Legend:
        1) Letter height: 1/2 IN minimum.
        2) Equipment designation as indicated on the Drawings (e.g., “Primary Sludge Pump P-xxx”).
6. Piping systems:
    a. Tag type:
        1) Outdoor locations: Type G - Stenciling System.
        2) Indoor locations:
            a) Type D - Self-Adhesive Tape Tags and Signs.
            b) Type G - Stenciling System.
    b. Fastener: Self.
    c. Color: Per ASME A13.1.
    d. Legend:
        1) Letter height: Manufacturers standard for the pipe diameter.
        2) Mark piping in accordance with ASME A13.1.
        3) Use piping designation as indicated on the Drawings.
        4) Arrow: Single arrow.
7. Process tanks (over 1000 GAL) and basins, (e.g., chemical storage, clarifiers, trickling filters, digesters, etc):
    a. Tag type:
        1) Type B2 - Nonmetallic Signs.
        2) Type G - Stenciling System.
    b. Fastener:
        1) Screw.
        2) Self.
    c. Location as directed by Owner.
    d. Legend:
        1) Letter height: 4 IN minimum.
        2) Equipment designation as indicated on the Drawings (e.g., “Clarifier CL-xxx”).
8. Tanks (less than 1000 GAL) (e.g., break tanks, chemical tanks, hydro-pneumatic tanks, air receivers, etc.):
    a. Tag type:
        1) Type D - Self-Adhesive Tape Tags and Signs.
        2) Type G - Stenciling System.
    b. Fastener: Self.
    c. Legend:
        1) Letter height: 2 IN minimum.
        2) Equipment designation as indicated on the Drawings (e.g., “Polymer Storage Tank Txxx”)

9. Equipment that starts automatically:
    a. Tag type:
        1) Type B2 - Nonmetallic Signs.
        2) Type D - Self-Adhesive Tape Tags and Signs.
    b. Fastener:
        1) Type B2 - Screw or adhesive.
        2) Type D - Self.
    c. Size: 5 IN x 7 IN
    d. Location: {Equipment name}.
    e. Legend:
        1) OSHA Warning Sign.
        2) Description of Warning: “THIS MACHINE STARTS AUTOMATICALLY.”

B. Instrumentation Systems:
    1. Instrumentation Equipment (e.g., flow control valves, primary elements, etc.):
        a. Tag type:
            1) Outdoor locations: Type B1 - Square Nonmetallic Tags.
            2) Indoor noncorrosive:
                a) Type A1 - Round Metal Tags.
                b) Type B1 - Square Nonmetallic Tags.
            3) Indoor corrosive:
                a) Stainless steel Type A1 - Round Metal Tags.
                b) Type B1 - Square Nonmetallic Tags.
        b. Fastener:
            1) Type A1: Chain of the same material.
            2) Type B1: Stainless steel chain.
        c. Legend:
            1) Letter height: 1/4 IN minimum.
            2) Equipment ISA designation as indicated on the Drawings (e.g., “FIT-xxx”).
    2. Enclosure for instrumentation and control equipment, (e.g., PLC control panels, etc.):
        a. Tag type: Type C - Phenolic Name Plates.
        b. Fastener: Screws.
        c. Legend:
            1) Letter height: 1/2 IN minimum.
            2) Equipment name (e.g., "PLC CONTROL PANEL PCP-xxx").
    3. Components inside equipment enclosure, (e.g., PLC’s, control relays, contactors, and timers):
        a. Tag type: Type D - Self-Adhesive Tape Tags.
        b. Fastener: Self.
        c. Legend:
            1) Letter height: 3/16 IN minimum.
            2) Description or function of component (e.g., "PLC-xxx” or “CR-xxx").
    4. Through enclosure door mounted components (e.g., selector switches, controller digital displays, etc.):
        a. Tag type: Type C - Phenolic Name Plates.
        b. Fastener: Screws.
        c. Legend:
            1) Letter height: 1/4 IN minimum.
            2) Component ISA tag number as indicated on the Drawings (e.g., “HS-xxx”).

C. HVAC Systems:
    1. General:
        a. Provide arrows and markers on ducts.
            1) At 20 FT maximum centers along continuous lines.
            2) At changes in direction (route) or obstructions.
            3) At dampers, risers, branches, machinery or equipment.

4) Where ducts pass through floors, walls, ceilings, cladding assemblies and like obstructions provide markers on both sides.

b. Position markers on both sides of duct with arrow markers pointing in flow direction.

1) If flow is in both directions use double headed arrow markers.

c. Apply tapes and stenciling in uniform manner parallel to ducts.

2. HVAC Equipment (e.g., unit heaters, exhaust fans, air handlers, etc.):

a. Tag type:

1) Type B2 - Nonmetallic Signs.

2) Type C - Phenolic Name Plates.

b. Fastener: Screws.

c. Legend:

1) Letter height: 1 IN minimum.

2) Equipment designation as indicated on the Drawings (e.g., "EF-xxx").

3. Ductwork:

a. Tag type:

1) Type D - Self-Adhesive Tape Tags and Signs.

2) Type G - Stenciling System.

b. Fastener: Self.

c. Legend:

1) Letter height: 1 IN minimum.

2) Description of ductwork, (e.g., “AIR SUPPLY”).

3) Arrows: Single arrow.

4. Enclosure for instrumentation and control equipment, (e.g., fan control panels, etc.):

a. Tag type: Type C - Phenolic Name Plates.

b. Fastener: Screws.

c. Legend:

1) Letter height: 1/2 IN minimum.

2) Equipment designation as indicated on the Drawings (e.g., "FAN CONTROL PANEL FCP-xxx").

5. Wall mounted thermostats:

a. Tag type: Type D - Self-Adhesive Tape Tags and Signs.

b. Fastener: Self.

c. Legend:

1) Letter height: 3/16 IN minimum.

2) Description of equipment controlled (e.g., "UH-xxx" or AHU-xxx").

6. Components inside equipment enclosure, (e.g., controller’s, control relays, contactors, and timers):

a. Tag type: Type D - Self-Adhesive Tape Tags and Signs.

b. Fastener: Self.

c. Legend:

1) Letter height: 3/16 IN minimum.

2) Description or function of component (e.g., "CR-xxx").

7. Through enclosure door mounted equipment (e.g., selector switches, controller digital displays, etc.):

a. Tag type: Type C - Phenolic Name Plates.

b. Fastener: Screws.

c. Legend:

1) Letter height: 1/4 IN minimum.

2) Component tag number as indicated on the Drawings or as defined by contractor (e.g., “HS-xxx”).

D. Electrical Systems:

1. Trenches with ductbanks, direct-buried conduit, or direct-buried wire and cable.

a. Tag type: Type F - Underground Warning Tape.

b. Letter height: 1-1/4 IN minimum.

c. Location:
    1) Where trench is 12 IN or more below finished grade: In trench 6 IN below finished grade.
    2) Where trench is less than 12 IN below finished grade: In trench 3 IN below finished grade.
d. Electrical power (e.g., low and medium voltage):
    1) Color: Red with black letters.
    2) Legend:
        a) First line: “CAUTION CAUTION CAUTION.”
        b) Second line: “BURIED ELECTRIC LINE BELOW.”
e. Communications (e.g., telephone, instrumentation, LAN, SCADA):
    1) Color: Orange with black letters.
    2) Legend:
        a) First line: “CAUTION CAUTION CAUTION.”
        b) Second line: “BURIED COMMUNICATION LINE BELOW.”

2. Switchgear, switchboards and motor control centers:
    a. Tag type: Type C - Phenolic Name Plates.
    b. Fastener: Screws.
    c. Main equipment legend:
        1) Letter height:
            a) First line: 1 IN minimum.
            b) Subsequent lines: 3/8 IN minimum.
        2) First line: Equipment name (e.g., "MAIN SWITCHBOARD MSBxxx").
        3) Second line:
            a) Source of power (e.g., "FED FROM MCCxxx LOCATED IN ROOM xxx").
            b) The source of power room number is only required when there are multiple electrical rooms, if the source is in another building, the building name or number shall be used.
        4) Third line: System voltage and phase (e.g., “480/277 V, 3PH”).
    d. Main and feeder device legend:
        1) Letter height: 3/8 IN minimum.
        2) Description of load (e.g., “MAIN DISCONNECT”, "PUMP Pxxx" or "PANELBOARD HPxxx").
3. Panelboards and transformers:
    a. Tag type: Type C - Phenolic Name Plates.
    b. Fastener: Screws.
    c. Legend:
        1) Letter height:
            a) First line: 3/8 IN minimum.
            b) Subsequent lines: 3/16 IN minimum.
        2) First line: Equipment name (e.g., "PANELBOARD LPxxx" or "TRANSFORMER Txxx").
        3) Second line (panelboards only): System voltage and phase (e.g., “208/120V, 3PH”).
4. Transfer switches:
    a. Tag type: Type C - Phenolic Name Plates.
    b. Fastener: Screws.
    c. Legend:
        1) Letter height:
            a) First line: 3/8 IN minimum.
            b) Subsequent lines: 3/16 IN minimum.
        2) First line: Equipment name (e.g., "AUTOMATIC TRANSFER SWITCH ATSxxx").
5. Safety switches, separately mounted circuit breakers and motor starters, VFD’s, etc.:
    a. Tag type: Type C - Phenolic Name Plates.
    b. Fastener: Screws.

c. Legend:
    1) Letter height: 1/4 IN minimum.
    2) First line: Description of load equipment is connected to (e.g., "PUMP Pxxx").

6. Enclosure for instrumentation and control equipment, (e.g., lighting control panels, etc.):
    a. Tag type: Type C - Phenolic Name Plates.
    b. Fastener: Screws.
    c. Legend:
        1) Letter height: 1/2 IN minimum.
        2) Equipment name (e.g., "LIGHTING CONTROL PANEL LCPxxx").
7. Components inside equipment enclosures (e.g., circuit breakers, fuses, control power transformers, control relays, contactors, timers, etc.):
    a. Tag type: Type D - Self-Adhesive Tape Tags and Signs.
    b. Fastener: Self.
    c. Legend:
        1) Letter height: 3/16 IN minimum.
        2) Description or function of component (e.g., "M-xxx", “CR-xxx” or “TR-xxx").
8. Through enclosure door mounted equipment (e.g., selector switches, controller digital displays, etc.):
    a. Tag type: Type C - Phenolic Name Plates.
    b. Fastener: Screws.
    c. Legend:
        1) Letter height: 1/4 IN minimum.
        2) Component tag number as indicated on the Drawings or as defined by Contractor (e.g., “HS-xxx”).
9. Conductors in control panels and in pull or junction boxes where multiple circuits exist.
    a. Tag type: Type D - Self-Adhesive Tape Tags.
    b. Fastener: Self.
    c. Tag conductor at both ends.
    d. Legend:
        1) Letter height: 1/8 IN minimum.
        2) Circuit number or wire number as scheduled on the Drawings or as furnished with the equipment.
10. Conductors in handholes and manholes.
    a. Tag type: Type A3 - Metal Tape Tags.
    b. Fastener: Nylon strap.
    c. Tag conductor at both ends.
    d. Legend:
        1) Letter height: 1/8 IN minimum.
        2) Circuit number or wire number as scheduled on the Drawings.
11. Grounding conductors associated with grounding electrode system in accordance with the following:
    a. Tag type: Type D - Self-Adhesive Tape Tags.
    b. Fastener: Self.
    c. Legend:
        1) Letter height: 1/8 IN minimum.
        2) Function of conductor (e.g., "MAIN BONDING JUMPER", "TO GROUND RING", "TO MAIN WATER PIPE").
12. Flash protection for switchboards, panelboards, industrial control panels and motor control centers:
    a. Tag type: Type D - Self-Adhesive Tape Signs.
    b. Fastener: Self.
    c. Legend: Per NFPA 70.
13. Entrances to electrical rooms:
    a. Tag type: Type B2 - Nonmetallic Signs.
    b. Fastener: Screw or adhesive.
    c. Size: 5 IN x 7 IN.

d. Location: Each door to room.
e. Legend:
1) OSHA Danger Sign.
2) Description of Danger: "HIGH VOLTAGE, AUTHORIZED PERSONNEL ONLY."

14. Equipment where more than one (1) voltage source is present:
a. Tag type:
1) Type B2 - Nonmetallic Signs.
2) Type D - Self-Adhesive Tape Signs.
b. Fastener:
1) Screw or adhesive.
2) Self.
c. Size: 1-3/4 IN x 2-1/2 IN.
d. Location: Exterior face of enclosure or cubical.
e. Legend:
1) OSHA Danger Sign.
2) Description of Danger: "MULTIPLE VOLTAGE SOURCES."

3.3 HAZARD AND SAFETY SIGNS

A. Provide {25} Hazard and Safety Signs:
1. Type {B2} {D}.
2. Inscription as directed by Owner.

END OF SECTION

2014/04/01

SECTION 13440

INSTRUMENTATION FOR PROCESS CONTROL: BASIC REQUIREMENTS

PART 1 - GENERAL

1.1 SUMMARY

A. Section Includes:
   1. Basic requirements for complete instrumentation system for process control.

B. Related Specification Sections include but are not necessarily limited to:
   1. Division 00 - Bidding Requirements, Contract Forms, and Conditions of the Contract.
   2. Division 01 - General Requirements.
   3. Section 10400 - Identification Devices.
   4. Section 13448 - Control Panels and Enclosures.
   5. Division 16 - Electrical.
   6. Section 16120 - Wire and Cable - 600 Volt and Below.

1.2 QUALITY ASSURANCE

A. Referenced Standards:
   1. Canadian Standards Association (CSA).
   2. FM Global (FM).
   3. The Instrumentation, Systems, and Automation Society (ISA):
      a. 7.0.01, Quality Standard for Instrument Air.
      b. S5.1, Instrumentation Symbols and Identification.
      c. S5.3, Graphic Symbols for Distributed Control/Shared Display Instrumentation, Logic and Computer Systems.
      d. S5.4, Standard Instrument Loop Diagrams.
      e. S20, Standard Specification Forms for Process Measurement and Control Instruments, Primary Elements and Control Valves.
   4. National Electrical Manufacturers Association (NEMA):
      a. 250, Enclosures for Electrical Equipment (1000 Volts Maximum).
   5. National Fire Protection Association (NFPA):
      a. 70, National Electrical Code (NEC).
   6. National Institute of Standards and Technology (NIST).
   7. Underwriters Laboratories, Inc. (UL):
      a. 913, Standard for Safety, Intrinsically Safe Apparatus and Associated Apparatus for Use in Class I, II, and III, Division 1, Hazardous (Classified) Locations.

B. Qualifications:
   1. Instrumentation subcontractor:
      a. Experience:
         1) Have satisfactorily provided a control system for a minimum of five (5) projects of similar magnitude and function.

C. Miscellaneous:
   1. Comply with electrical classifications and NEMA enclosure types shown on Drawings.

1.3 DEFINITIONS

A. Architecturally finished area: Offices, laboratories, conference rooms, restrooms, corridors and other similar occupied spaces.

B. Non-architecturally Finished Area: Pump, chemical, mechanical, electrical rooms and other similar process type rooms.

C. Hazardous Areas: Class I, II or III areas as defined in NFPA 70.

D. Highly Corrosive and Corrosive Areas: Rooms or areas identified on the Drawings where there is a varying degree of spillage or splashing of corrosive materials such as water, wastewater or chemical solutions; or chronic exposure to corrosive, caustic or acidic agents, chemicals, chemical fumes or chemical mixtures.

E. Outdoor Area: Exterior locations where the equipment is normally exposed to the weather and including below grade structures, such as vaults, manholes, handholes and in-ground pump stations.

F. Instrument Air Header: The segment of air supply piping and tubing which transports air from the compressed instrument air source through the branch isolation valve of any takeoff (branch) line.

G. Branch Line: The segment of air supply piping and tubing which transports air from the outlet of the air header branch isolation valve through an air user's isolation valve.

H. Intrinsically Safe Circuit: A circuit in which any spark or thermal effect is incapable of causing ignition of a mixture of flammable or combustible material in air under test conditions as prescribed in UL 913.

I. Calibrate: To standardize a device so that it provides a specified response to known inputs.

1.4 SYSTEM DESCRIPTION

A. Control System Requirements:
   1. This Specification Section provides the general requirements for the instrument and control system.
   2. The instrument and control system consists of all primary elements, transmitters, switches, controllers, computers, recorders, indicators, panels, signal converters, signal boosters, amplifiers, special power supplies, special or shielded cable, special grounding or isolation, auxiliaries, software, wiring, and other devices required to provide complete control of the plant as specified in the Contract Documents.

B. All signals shall be directly linearly proportional to measured variable unless specifically noted otherwise.

C. Single Instrumentation Subcontractor:
   1. Furnish and coordinate instrumentation system through a single instrumentation subcontractor.
      a. The instrumentation subcontractor shall be responsible for functional operations of all systems, performance of control system engineering, supervision of installation, final connections, calibrations, preparation of Drawings and Operation and Maintenance Manuals, start-up, training, demonstration of substantial completion and all other aspects of the control system.
   2. Ensure coordination of instrumentation with other work to ensure that necessary wiring, conduits, contacts, relays, converters, and incidentals are provided in order to transmit, receive, and control necessary signals to other control elements, to control panels, and to receiving stations.

1.5 SUBMITTALS

A. Shop Drawings:
   1. See Specification Section 01340 for requirements for the mechanics and administration of the submittal process.
   2. Submittals shall be original printed material or clear unblemished photocopies of original printed material.
      a. Facsimile information is not acceptable.
   3. Limit the scope of each submittal to one (1) Specification Section.

a. Each submittal must be submitted under the Specification Section containing requirements of submittal contents.
b. Do not provide any submittals for Specification Section 13440.

4. Product technical data including:
   a. Equipment catalog cut sheets.
   b. Instrument data sheets:
      1) ISA S20 or approved equal.
      2) Separate data sheet for each instrument.
   c. Materials of construction.
   d. Minimum and maximum flow ranges.
   e. Pressure loss curves.
   f. Physical limits of components including temperature and pressure limits.
   g. Size and weight.
   h. Electrical power requirements and wiring diagrams.
   i. NEMA rating of housings.
   j. Submittals shall be marked with arrows to show exact features to be provided.
5. Loop diagrams per ISA S5.4 as specified in Specification Section 13448.
6. Comprehensive set of wiring diagrams as specified in Specification Section 13448.
7. Panel fabrication Drawings as specified in Specification Section 13448.
8. PLC/DCS equipment Drawings.
9. HMI graphics.
10. Nameplate layout Drawings.
11. Drawings, systems, and other elements are represented schematically in accordance with ISA S5.1 and ISA S5.3.
    a. The nomenclature, tag numbers, equipment numbers, panel numbers, and related series identification contained in the Contract Documents shall be employed exclusively throughout submittals.
12. All Shop Drawings shall be modified with as-built information/corrections.
13. All panel and wiring drawings shall be provided in both hardcopy and softcopy.
    a. Furnish electronic files on CD-ROM or DVD-ROM media.
    b. Drawings in AUTO CAD format.
14. Provide a parameter setting summary sheet for each field configurable device.
15. Certifications:
    a. Documentation verifying that calibration equipment is certified with NIST traceability.
    b. Approvals from independent testing laboratories or approval agencies, such as UL, FM or CSA.
       1) Certification documentation is required for all equipment for which the specifications require independent agency approval.
16. Testing reports: Source quality control reports.

B. Operation and Maintenance Manuals:
   1. See Specification Section 01342 for requirements for:
      a. The mechanics and administration of the submittal process.
      b. The content of Operation and Maintenance Manuals.
   2. Warranties: Provide copies of warranties and list of factory authorized service agents.

1.6 DELIVERY, STORAGE, AND HANDLING

A. Do not remove shipping blocks, plugs, caps, and desiccant dryers installed to protect the instrumentation during shipment until the instruments are installed and permanent connections are made.

1.7 SITE CONDITIONS

A. Unless designated otherwise on the Drawings, area designations are as follows:
   1. Outdoor area:
      a. Wet.

b. Corrosive and/or hazardous when specifically designated on the Drawings or in the Specifications.
c. Below grade vaults and manholes:
1) Subject to temporary submergence when specifically designated on the Drawings or Specifications.
2. Architecturally finished area:
a. Dry.
b. Noncorrosive unless designated otherwise on the Drawings or in the Specifications.
c. Nonhazardous unless designated otherwise on the Drawings or in the Specifications.
3. Non-architecturally finished area: As designated elsewhere on the Drawings or in the Specifications.

PART 2 - PRODUCTS

2.1 NEMA TYPE REQUIREMENTS

A. Provide enclosures/housing for control system components in accordance with the following:
1. Areas designated as wet: NEMA Type 4.
2. Areas designated as wet and/or corrosive: NEMA Type 4X.
3. Either architecturally or non-architecturally finished areas designated as dry, noncorrosive, and nonhazardous: NEMA Type 12.
4. Areas designated to be subject to temporary submersion: NEMA 6P.

2.2 PERFORMANCE AND DESIGN REQUIREMENTS

A. System Operating Criteria:
1. Stability: After controls have taken corrective action, as result of a change in the controlled variable or a change in setpoint, oscillation of final control element shall not exceed two (2) cycles per minute or a magnitude of movement of 0.5 percent full travel.
2. Response: Any change in setpoint or change in controlled variable shall produce a corresponding corrective change in position of final control element and become stabilized within 30 seconds.
3. Agreement: Setpoint indication of controlled variable and measured indication of controlled variable shall agree within 3 percent of full scale over a 6:1 operating range.
4. Repeatability: For any repeated magnitude of control signal, from either an increasing or decreasing direction, the final control element shall take a repeated position within 0.5 percent of full travel regardless of force required to position final element.
5. Sensitivity: Controls shall respond to setpoint deviations and measured variable deviations within 1.0 percent of full scale.
6. Performance: All instruments and control devices shall perform in accordance with manufacturer's specifications.

2.3 ACCESSORIES

A. Provide identification devices for instrumentation system components in accordance with Specification Section 10400.

B. Provide corrosion resistant spacers to maintain 1/4 IN separation between equipment and mounting surface in wet areas, on below grade walls and on walls of liquid containment or processing areas such as Clarifiers, Digesters, Reservoirs, etc.

PART 3 - EXECUTION

3.1 INSTALLATION

A. Wherever feasible, use bottom entry for all conduit entry to instruments and junction boxes.

B. Panel-Mounted Instruments:
   1. Mount and wire so removal or replacement may be accomplished without interruption of service to adjacent devices.
   2. Locate all devices mounted inside enclosures so terminals and adjustment devices are readily accessible without use of special tools and with terminal markings clearly visible.

3.2 FIELD QUALITY CONTROL

A. See Specification Section 01650.

B. Maintain accurate daily log of all startup activities, calibration functions, and final setpoint adjustments.
   1. Documentation requirements include the utilization of the forms located at the end of this Specification Section.
      a. Loop Check-out Sheet.
      b. Instrument Certification Sheet.
      c. Final Control Element Certification Sheet.

C. Instrumentation Calibration:
   1. Verify that all instruments and control devices are calibrated to provide the performance required by the Contract Documents.
   2. Calibrate all field-mounted instruments, other than local pressure and temperature gages, after the device is mounted in place to assure proper installed operation.
   3. Calibrate in accordance with the manufacturer's specifications.
   4. Bench calibrate pressure and temperature gages.
      a. Field mount gage within seven (7) days of calibration.
   5. Check the calibration of each transmitter and gage across its specified range at 0, 25, 50, 75, and 100 percent.
      a. Check for both increasing and decreasing input signals to detect hysteresis.
   6. Replace any instrument which cannot be properly adjusted.
   7. Calibration equipment shall be certified by an independent agency with traceability to NIST.
      a. Certification shall be up-to-date.
      b. Use of equipment with expired certifications shall not be permitted.
   8. Calibration equipment shall be at least three (3) times more accurate as the device being calibrated.

D. Loop check-out requirements are as follows:
   1. Check control signal generation, transmission, reception and response for all control loops under simulated operating conditions by imposing a signal on the loop at the instrument connections.
      a. Use actual signals where available.
      b. Closely observe controllers, indicators, transmitters, HMI displays, recorders, alarm and trip units, remote setpoints, ratio systems, and other control components.
         1) Verify that readings at all loop components are in agreement.
         2) Make corrections as required.
            a) Following any corrections, retest the loop as before.
   2. Stroke all control valves, cylinders, drives and connecting linkages from the local control station and from the control room operator interface.
   3. Check all interlocks to the maximum extent possible.
   4. In addition to any other as-recorded documents, record all setpoint and calibration changes on all affected Contract Documents and turn over to the Owner.

E. Provide verification of system assembly, power, ground, and I/O tests.

F. Verify existence and measure adequacy of all grounds required for instrumentation and controls.

END OF SECTION

SECTION 13441
CONTROL LOOP DESCRIPTIONS

PART 1 - GENERAL

1.1 SUMMARY

A. Section Includes: Instrumentation control loops.

B. Related Specification Sections include but are not necessarily limited to:
   1. Division 00 - Bidding Requirements, Contract Forms, and Conditions of the Contract.
   2. Division 01 - General Requirements.
   3. Section 13440 - Instrumentation for Process Control: Basic Requirements.

1.2 QUALITY ASSURANCE

A. See Specification Section 13440.

1.3 SYSTEM DESCRIPTION

A. The control loop descriptions provide the functional requirements of the control loops represented in the Contract Documents.
   1. Descriptions are provided as follows:
      a. Control system overview and general description.
      b. Major equipment to be controlled.
      c. Major field mounted instruments (does not include local gages).
      d. Manual control functions.
      e. Automatic control functions/interlocks.
      f. Major indications provided at local control panels and motor starters/VFD's.
      g. Remote indications and alarms.

B. The control loop descriptions are not intended to be an inclusive listing of all elements and appurtenances required to execute loop functions, but are rather intended to supplement and complement the Drawings and other Specification Sections.
   1. The control loop descriptions shall not be considered equal to a bill of materials.

C. Provide instrumentation hardware and software as necessary to perform control functions specified herein and shown on Drawings.

D. The control system at the existing plant site will be linked via Ethernet over radio to four new field mounted PLCs. The effect of this communication link is to enable information transfer between the field devices and the water plant PLC. Other than modifications for PLC control, the existing, wired control systems such as the lime system, water filters, polymer systems, and Ruby Repository pump station will remain as they are.
   1. HMI server software resides in the Water Plant computer system. All graphics development is done here. The Operator Interface Terminal at the Ruby Repository pump station will receive graphics data pushes from the water plant computer via the asynchronous modem link. This OIT will function as a client and display the same monitoring/control screens as the water plant HMI.
   2. There is a new radio link from the Water Plant to the central site office to allow web access via satellite.
   3. There will also be an Ethernet printer in the Water Plant Control Room to allow report generation.

4. Each of the four new PLCs shall be capable of operating in a standalone mode. If there is a loss of data communication with the Water Plant PLC, the units shall operate with last known data until communication is restored or the system times out and goes to a programmed failsafe mode.

E. Automatic alarm dialing:
1. Software resident within the water plant HMI is programmed to activate a multi point autodialer unit. The autodialer automatically generates a call to listed telephone number(s) in the event of selected alarm conditions. These alarm conditions are broken into Divisions, allowing a custom audible message to be delivered to the operator. Operations will fill out an alarm spreadsheet to assist the programmer in setting up the system. An example spreadsheet is included in Section 13500B_Gilt_dialer.xlsx.

F. General Requirements:
1. In addition to the requirements specifically stated within the control loop descriptions, all control software and hardware shall be provided to ensure the safe and reliable operation of all controlled equipment.
2. A “Transmitter Trouble” alarm shall be generated upon loss of transmitter signal or if the signal is out of range (outside the 4 to 20 mA signal).
3. A “failsafe” design shall be incorporated in the logic so that loss of any signal or loss of power shall not endanger personnel or result in equipment damage.
4. Any restart of the PLC processor shall not restart the plant equipment. An operator initiated, controlled re-start of the plant equipment shall be implemented in the PLC logic.
5. All “soft” alarms on analog signals shall reside in the PLC logic and have de-bounce timers. The alarm setpoint shall be adjustable through the HMI with appropriate security.
6. All alarm and trip time delays shall be operator adjustable from the HMI system with appropriate security.
7. All process values, ranges, and setpoints described herein shall be considered “Initial Values” and may be changed during installation and startup.
8. The PLC and HMI system shall validate all operator entered setpoint values before implementation. All Alarm setpoint changes can be made by an operator level password unless otherwise noted and all Trip setpoint changes can be made by supervisory level password.
9. The flow signal inputs shall be totalized for each calendar day. The HMI system shall display a value for “today’s total flow” (FQI-xxx) and “Yesterday’s total flow” (FQIY-xxx). Each days total is to be stored in the HMI system.
10. All PID loops shall be programmed for “bumpless transfer” between auto and manual modes from the HMI system.

1.4 SUBMITTALS

A. See Specification Section 01340 for requirements for the mechanics and administration of the submittal process.

B. See Specification Section 13440.

C. Operation and Maintenance Manuals:
1. See Specification Section 01342 for requirements for:
   a. The mechanics and administration of the submittal process.
   b. The content of Operation and Maintenance Manuals.

D. Control Strategy for Record Documents:
1. Obtain this Specification Section 13441 in electronic format (Microsoft Word) from Engineer at beginning of Project.
2. Revise and update the file monthly during construction and start-up to reflect all changes that occur due to specific equipment and systems supplied on the Project.
   a. Show all revisions in 'track change' mode.

b. Change Specification Section Title to read "Control Loop Descriptions - Contractor Record Document."
c. Reference all changes by Request for Information (RFI) number or Change Proposal Request (CPR) number.
d. Submit revised file monthly to Engineer for review.

3. Deliver the revised and updated file as a final control loop description Record Document in the Operation and Maintenance Manual described in Specification Section 01342.
4. Provide both paper copy and electronic copy (on CD-ROM) of the Record Document control loop descriptions in the Operation and Maintenance Manual described in Specification Section 01342.

PART 2 - PRODUCTS - (NOT APPLICABLE TO THIS SPECIFICATION SECTION)

PART 3 - EXECUTION

3.1 CONTROL LOOPS

A. RTU-1: Hoodoo Gulch:

a. Control Loop100 – Hoodoo Genset:
   1) Major Equipment:
      a) PLC-100.
      b) Water Plant and remote HMI.
      c) Site Generator.
   2) Control Logic:
      a) XA-100: Generator general trouble alarm. This alarm is documented in the PLC Historian. This is a general notification alarm if the genset is not running and a priority one notification if it is. A genset general alarm that occurs while there is no site power will activate the autodialer.
      b) YI-100: Generator running indication.
   3) Indications at the HMI:
      a) XA-100: Generator general trouble alarm.
      b) YI-100: Generator running indication

b. Control Loop 101 – Tramont Fuel Unit:
   1) Major Equipment:
      a) PLC 100.
      b) Water Plant HMI.
      c) Tramont Fuel Unit.
   2) Indications at the HMI:
      a) LAH-101A: High day tank level.
      b) LAH-101B: Fuel in rupture Basin.
      c) LAL-101: Low day tank level.
      d) XA-101: Day tank system trouble.

c. Control Loop 102 – Automatic Transfer Switch:
   1) Major Equipment:
      a) PLC 100.
      b) Water Plant and remote HMI.
      c) Automatic Transfer Switch.
   2) Control Logic:
      a) When the ATS position is not NORMAL, all alarms associated with the Tramont fuel unit (Day Tank) and the generator are elevated to critical alarms.
   3) Indications at the HMI:
      a) XA-102: ATS trouble.
      b) YI-102A: ATS in normal Position.
      c) YI-102B: ATS in emergency position .

d. Control Loop 103 – Pump discharge flow meter:
   1) Major Equipment:
      a) PLC 100.
      b) Water Plant and remote HMI.
   2) Major Field Instruments:
      a) FE-103: Magnetic Flow Tube.
      b) FIT-103: Flow transmitter.
   3) Indications at the HMI:
      a) FI-103: Pump discharge flow.
      b) FQI-103B: Total flow (since last reset).
e. Control Loop 104 – UPS Monitoring:
   1) Major Equipment:
      a) PLC 100.
      b) Water Plant and remote HMI.
      c) PLC UPS.
   2) Indications at the HMI:
      a) XA-104A: UPS Fault Alarm.
      b) XA-104B: UPS on battery Alarm.
f. Control Loop 105 – Heat Trace Control:
   1) Major Equipment:
      a) PLC 100.
      b) Water Plant and remote HMI.
      c) Heat Trace Panel HTP-100.
   2) Major Field Instruments:
      a) TSL-105: Ambient air temperature switch.
      b) ISL-105: Low current switch (inside HTP-100).
   3) Control Logic:
      a) Operation of the heat trace is in accordance with the position of the local switch HS-105A:
         (1) When HS-105A is in ON position the heat trace is energized.
         (2) When HS-105A is in AUTO position heat trace is controlled by the PLC via operator switch HS-105B:
            (a) If HS-105B is in AUTO position; the heat trace cycles on and off based on the operation of the ambient temperature switch TSL-105.
            (b) If HS-105B is in MANUAL position; heat trace can be turned on or off by the operator. A position other than AUTO is documented and alarmed.
   4) Indications at the HMI:
      a) XA-105: Heat trace fault. This is a critical alarm.
      b) TSL-105: Indication that the heat trace should be active.
g. Control Loop 106 – Site Power Failure:
   1) Major Equipment:
      a) PLC 100
      b) Water Plant and remote HMI.
      c) Pump 1 control panel PCP-101.
   2) Indications at the HMI:
      a) XA-106: Hoodoo Gulch Pump Station power loss.
h. Control Loop 110 – Pump one monitoring:
   1) Major Equipment:
      a) PLC 100.
      b) Water Plant and remote HMI.
      c) Pump control Panel PCP-101.
   2) Major Field Instruments:
      a) LSL-110: Low level alarm/shutdown float switch.
      b) LS1-110: Pump stop float switch.
      c) LS2-110: Pump start float switch.

d) LSH-110: High level alarm float switch.

3) Control Logic:

a) Pump panel PCP-101 is a self contained, existing unit. The only control logic associated with this device is a remote permit to allow cycling the pump with a second unit, to be installed in the future. There will also be a control modification to the existing pump panel to allow the low level switch to stop the pump. The remaining points are for monitoring only and connect the pump panel to the PLC IO.

b) The pump must be permitted to run by the PLC. This allows the PLC to alternate the well pumps in the future.

c) The pump operates in accordance with the position of HS-110:

(1) If HS-110 switch is in OFF the pump will not be allowed to run from the PLC.

(2) If HS-110 switch is in AUTO, the pump will be made ready to operate depending on the selection of the alternator HS-111 and the level in the wet well.

4) Indications at the HMI:

a) HS-110: Remote lockout of the pump.

b) KQI-110: Pump run hours (since last reset).

c) LAH-110: High wet well level alarm.

d) LAL-110: Low wet well level alarm.

e) XA-110A: Soft Start fault.

f) XA-110B: circuit breaker trip.

g) YI-110A: Pump in Auto position.

h) YI-110B: Pump Running.

i. Control Loop 111 – Pump Cycle Controller:

1) Major Equipment:

a) PLC 100.

b) Water Plant and remote HMI.

c) Existing Pump control panel PCP-101 and pump.

d) Future Pump control panel PCP-102 and pump.

2) Control Logic:

a) This control loop simulates a pump alternator. There is currently one, and soon to be two independent wet well pumps at Hoodoo Gulch. These shall be cycled for even run hours. Programming will be set up for a dual pump, lead-standby system and in the future the second pump will just need to be connected.

b) Each pump will be controlled by the local HAND-OFF-AUTO switch at its control panel.

(1) When the switch is in HAND, the pump cycles per its internal logic in a stand-alone fashion.

(2) When the switch is in OFF, the pump is inhibited from operating.

(3) When the switch is in AUTO, the pump control panel will respond to float levels by operating the pumps as required to maintain level if it is permitted to operate by HS-110 for pump 1 and HS-120 for pump 2 and the call of the alternator switch HS-111.

c) The alternator HS-111 will toggle between available pumps after each operational cycle. It determines which pumps are available by looking at the status of the FAULT, TRIP, and AUTO inputs. If a pump is selected and a high wet well level alarm occurs, it will be stopped and the next pump will be commanded to run.

d) Only one pump is permitted to run at a time.

j. Control Loop 115 – Discharge Line Dump Valve:

1) Major Equipment:

a) PLC 100.

b) Water Plant and remote HMI.

c) Pump 1 or 2 run status.

2) Major Instrumentation:
   a) FV-115 fail open motor operated valve.
3) Control Logic:
   a) Operation of FV-115 is in accordance with the position of HS-115A:
      (1) If HS-115A is in OPEN position; the valve loses power and fails open.
      (2) If HS-115A is in the CLOSED position; the valve receives power and drives closed.
      (3) If HS-115A is in AUTO position; the valve responds to an output from the PLC based on the operator selection of HS-115B:
         (a) If HS-115B is in AUTO position; when a pump runs, the valve will be powered and driven closed. When there is no running pump. The valve loses power and fails to the open position.
         (b) If HS-115B is in MANUAL; the valve can be toggled open and closed from the HMI or OIT. A position other than AUTO is alarmed.
4) Indications at the HMI:
   a) YI-115: HS-115A field switch in AUTO.

k. Control Loop 120 – Pump 2 monitoring:
1) Major Equipment:
   a) PLC-100.
   b) Water Plant and remote HMI.
   c) Future Hoodoo Pump 2 wet well.
2) Major Instrumentation:
   a) LT-120
3) Control Logic:
   a) The operation of pump two and control loop 120 is identical to pump one and control loop 110 with the exception of an analog level transmitter with operator selectable setpoints rather than fixed float switches. This point will be built in the PLC in preparation for the installation of the second pump. Level transmitter LT-120 will connect to the PLC to indicate wet well level. When the second pump is installed, the level transmitter signal will control the pump via the PLC.
4) Indications at the HMI:
   a) LI-120: Level indication of the Hoodoo pump 2 wet well.
   b) LAL-120: Low level in the Hoodoo pump 2 wet well.
   c) LAH-120: High level in the Hoodoo pump 2 wet well.

l. Control Loop 121 – Future Pump 2 low level pump stop:
1) Major Equipment:
   a) PLC-100.
   b) Water Plant and remote HMI.
   c) Future Hoodoo Pump 2 wet well.
2) Major Instrumentation:
   a) LSL-121
   b) Control relay added to PLC panel to toggle with LSLL-121.
3) Control Logic:
   a) LSL-121 is normally held closed by water level in the wet well. If the level lowers below the operation level of the float, it will open, stopping pump 2 and alarming at the HMI.
4) Indications at the HMI:
   a) LAL-121: Low level pump stop indication of the Hoodoo pump 2 wet well.

B. RTU-2: Ruby Repository:

There is an existing PLC controlled pump station at this site. This project modifies the existing PLC by adding control points and revising the logic as required to accommodate the new site functionality. The Operator Interface Terminal (OIT) screen count shall be revised to show all screens rather than only the Ruby Repository.

Existing instrumentation and control is shown on the P&ID 00Y-07 for reference as half tone. Additions to the base program are listed below.

a. Control Loop 200 – Ruby Repository Genset:
   1) Major Equipment:
      a) PLC-200 (Existing).
      b) Water Plant and remote HMI and Ruby Repository OIT.
      c) Site Generator (Existing).
   2) Control Logic:
      a) XA-200: Generator general trouble alarm. This alarm is documented in the PLC Historian. This is a general notification alarm if the genset is not running and a priority one notification if it is. A genset general alarm that occurs while there is no site power will activate the autodialer.
      b) YI-200: Generator running indication.
   3) Indications at the HMI, OIT:
      a) XA-200: Generator general trouble alarm.
      b) YI-200: Generator running indication
b. Control Loop 201 – Tramont Fuel Unit:
   1) Major Equipment:
      a) PLC 200 (Existing).
      b) Water Plant and remote HMI and Ruby Repository OIT.
      c) Tramont Fuel Unit (Existing).
   2) Indications at the HMI, OIT:
      a) LAH-201A: High day tank level.
      b) LAH-201B: Fuel in rupture Basin.
      c) LAL-201: Low day tank level.
      d) XA-201: Day tank system trouble.
c. Control Loop 202 – Automatic Transfer Switch:
   1) Major Equipment:
      a) PLC 200 (Existing).
      b) Water Plant and remote HMI and Ruby Repository OIT.
      c) Automatic Transfer Switch (Existing).
   2) Control Logic:
      a) When the ATS position is not NORMAL, all alarms associated with the Tramont fuel unit (Day Tank) and the generator are elevated to critical alarms.
   3) Indications at the HMI, OIT:
      a) XA-202: ATS trouble.
      b) YI-202A: ATS in NORMAL Position.
      c) YI-202B: ATS in EMERGENCY Position.
d. Control Loop 203 – UPS Monitoring:
   1) Major Equipment:
      a) PLC 200 (Existing).
      b) Water Plant and remote HMI and Ruby Repository OIT.
      c) PLC UPS.
   2) Indications at the HMI, OIT:
      a) XA-203A: UPS Fault Alarm.
      b) XA-203B: UPS on battery Alarm.
   3) Major Equipment:
      a) PLC 200 (Existing).
      b) Water Plant HMI and Ruby Repository OIT.
      c) Heat Trace Panel HTP-200.
   4) Major Field Instruments:
      a) TSL-205: Ambient air temperature switch.
      b) ISL-205: Low current switch (within HTP-200).
   5) Control Logic:

a) Operation of the heat trace is in accordance with the position of the local switch HS-205A:
(1) When HS-205A is in ON position the heat trace is energized.
(2) When HS-205A is in AUTO position heat trace is controlled by the PLC via operator switch HS-205B:
(a) If HS-205B is in AUTO position; the heat trace cycles on and off based on the operation of the ambient temperature switch TSL-205.
(b) If HS-205B is in MANUAL position; heat trace can be turned on or off by the operator. A position other than AUTO is documented and alarmed.

6) Indications at the HMI, OIT:
a) XA-205: Heat trace fault. This is a critical alarm.
b) TSL-205: Closed switch indicates that the heat trace should be active.

e. Control Loop 206 – Low Room Temperature Alarm:
1) Major Equipment:
a) PLC 200 (Existing).
b) Water Plant and remote HMI and Ruby Repository OIT.
2) Major Field Instruments:
a) TSL-206: Ruby pump house ambient temperature switch.
3) Indications at the HMI, OIT:
a) TAL-206: Low temperature in the pump room.

f. Control Loops 210 and 211 – Ruby Pit Pumps Control.
1) Major Equipment:
a) PLC 200 (Existing).
b) Water Plant and remote HMI and Ruby Repository OIT.
c) Pump 1and existing soft start.
d) Pump 2 and existing soft start.
2) Major Field Instruments:
a) LT-210: UST level transmitter.
3) Control Logic:
The pre-existing pump control logic will be modified to act in response to LIC-210 setpoints and selections at the pump cycle switch HS-211. All existing pump safeties and interlocks will be maintained. The following logic is in effect when the pumps are set to AUTO.
a) This control loop simulates a pump alternator. Pump operation is based on operator adjustable level setpoints entered into LIC-210. Pump start commands are presented to the alternator HS-211 and it will do the logic for pump alternating and LEAD-LAG-STANDBY selection. Pumps shall be cycled for even run hours. If a pump is called to start and does not prove running within 15 seconds, it will be moved to STANDBY and an alarm generated. The lag pump will then be elevated to lead and cycle as one unit until the standby pump is returned to duty.
4) Indications at the HMI, OIT:
a) LIC-210: Water level indication in the underground storage tank.
b) LAL-210: Low level alarm in the underground storage tank.
c) LALL-210: Low-Low level in the underground storage tank.
d) Operator setpoints for lead, lag pump starts and pumps stop.

g. Control Loop 220 – Ruby Pit Overflow Pond Level.
1) Major Equipment:
a) PLC 200 (Existing).
b) Water Plant and remote HMI and Ruby Repository OIT.
2) Major Field Instruments:
a) LT-220: Ruby Pit Overflow Pond Level Transmitter.
3) Control Logic:
a) A high level in the Ruby Pit Overflow Pond will inhibit operation of the seep pit pump P-220.

4) Indications at the HMI, OIT:
   a) LI-220: Ruby Pit Overflow Pond level indication.
   b) LAL-220: Ruby Pit Overflow Pond low level alarm.
   c) LAH-220: Ruby Pit Overflow Pond high level alarm.

h. Control Loop 221 – ARD (Wet Well) Flow Indicating Totalizer.
   1) Major Equipment:
      a) PLC 200 (Existing).
      b) Water Plant and remote HMI and Ruby Repository OIT.
   2) Major Field Instrumentation:
      a) FQIT-221: ARD flow from Wet Well (P-220 discharge).
   3) Indications at the HMI, OIT:
      a) FI-221: ATD flow from Wet Well to UST.
      b) FQ-221: Total flow to the UST (since last reset).

i. Control Loop 225 and 230 – Wet Well Pump P-220 Control:
   1) Major Equipment:
      a) PLC 200 (Existing).
      b) Water Plant and remote HMI and Ruby Repository OIT.
      c) Wet Well pump and VFD.
   2) Major Field Instrumentation:
      a) LT-230: Ruby Toe Wet Well level transmitter.
   3) Control Logic:
      a) The Wet Well Pump P-220 operates in accordance with the selections made at the local VFD control display:
         (1) When the selector is set to LOCAL, the pump can be operated at the VFD.
         (2) When the selector is set to OFF, the pump is de-energized and does not run.
         (3) When the selector is set to REMOTE, the pump operates in accordance with the position of the HMI point SIC-225.
            (a) When SIC-225 is in MANUAL, the operator can adjust the speed of the pump.
            (b) When SIC-225 is set to AUTO, the pump speed varies in accordance to the mode of LIC-230.
               1. When LIC-230 is set to DRY, pump P-220 will cycle between two operator adjustable setpoints in an on/off arrangement. Pump speed will be operator adjustable with a default setpoint of 90%.
               2. When LIC-230 is set to WET, pump P-220 will operate in normal level control and its speed will vary as required to maintain an operator adjustable setpoint entered at LIC-230.
               3. Automatic pump operation is inhibited when there is a high level in the overflow pit as indicated by LAH-220.
   4) Indications at the HMI, OIT:
      a) KQI-225: run hours (since last reset).
      b) XA-225A: P-220 VFD fault.
      c) XA-225B: P-220 failed to start within 10 seconds of a PLC request to do so.
      d) YI-225A: P-220 VFD in Remote.
      e) YI-225B: P-220 Running.
      f) LIC-230: Seep Pit level indication.
      g) LAL-230: Seep Pit Low level alarm.
      h) LAH-230: Seep Pit High level alarm.

j. Control Loop 250 – Rain Gauge:
   1) Major Equipment:
      a) PLC 200 (Existing).
      b) Water Plant and remote HMI and Ruby Repository OIT.
   2) Major Field Instruments:
      a) Rain gauge roof top sensor.
   3) Control Logic:

a) The rain sensor pulses for 100 milliseconds every 0.01 inches of rain. This will be brought into the PLC 200 panel to activate a time delay or single shot relay, stretching the pulse to 2 seconds. The screen indications will be calculated by the number of counts and the elapsed time. All indications are presented on a display in a spreadsheet fashion. The mathematics for the display generation and an electrical schematic for the time delay relay are detailed in section I of the general report.

4) Indications at the HMI and OIT:
   a) Instantaneous rain, updated on 2 minute intervals.
   b) Daily rain totals from midnight to midnight.
   c) Weekly totals from Sunday to Sunday.
   d) Monthly totals.
   e) Yearly totals.

C. RTU-3: Sunday Pit:

Sunday Pit will have a radio connected PLC installed at the electrical equipment rack. The PLC will monitor and control the existing barge pump and two existing valves that will be retrofitted with electric actuators. These and other miscellaneous alarms are defined below.

a. Control Loop 301 – Strawberry Pond Dump Valve:
   1) Major Equipment:
      a) PLC-300.
      b) Water Plant and remote HMI.
   2) Major Field Instruments:
      a) FV-301: Strawberry Pond Dump Valve Actuator.
   3) Control Logic:
      a) FV-301 operates in accordance with the position of its local switch HS-301A;
         (1) When HS-301A is in LOCAL position, FV-301 is controlled by the local OPEN, CLOSE and STOP pushbuttons.
         (2) When HS-301A is in OFF position, FV-301 is locked in its last position and does not move.
         (3) When HS-301A is in REMOTE position, FV-301 operates in accordance with the selection of HS-301E at the HMI;
            (a) When HS-301E is in MANUAL, FV-301 can be controlled from the HMI or OIT screen.
            (b) When HS-301E is in AUTO, FV-301 position is determined by PLC interlocks. When the Strawberry Pond level gets too high (LAHH-403), FV-301 will open and the water plant will go into hold mode. If there is a lack of communication between the water plant PLC and the Sunday Pit PLC for an operator adjustable time (initially set at 10 minutes), FV-301 will open and the water plant will be placed on hold.
   4) Indications at the HMI:
      a) XA-301: FV-301 valve actuator trouble alarm.
      b) YI-301: HV-301 in Remote.
      c) ZCI-301: FV-301 Closed Indication.
      d) ZOI-301: FV-301 Open Indication.

b. Control Loop 302 – Barge Pump Discharge Valve:
   1) Major Equipment:
      a) PLC-300.
      b) Water Plant and remote HMI.
   2) Major Field Instruments:
      a) FV-302: Strawberry Pit Barge Pump Valve Actuator.
   3) Control Logic:
      a) FV-302 operates in accordance with the position of its local switch HS-302A;
         (1) When HS-302A is in LOCAL position, FV-302 is controlled by the local OPEN, CLOSE and STOP pushbuttons.

(2) When HS-302A is in OFF position, FV-302 is locked in its last position and does not move.
(3) When HS-302A is in REMOTE, FV-302 operates in accordance with the selection of HS-302E at the HMI;
(a) When HS-302E is in MANUAL, FV-301 can be controlled from the HMI screen.
(b) When HS-302 is in AUTO, FV-301 position is determined by PLC interlocks. If there is a lack of communication between the water plant PLC and the Sunday Pit PLC for an operator adjustable time (initially set at 10 minutes), FV-302 will close.

4) Indications at the HMI:
a) XA-302: FV-302 valve actuator trouble alarm.
b) YI-302: HV-302 in Remote.
c) ZCI-302: FV-302 Closed Indication.
d) ZOI-302: FV-302 Open Indication.

c. Control Loop 303 – Barge Pump P-301 Control:
1) Major Equipment:
a) PLC-300.
b) Water Plant and remote HMI.
c) Barge Pump P-301.
2) Control Logic:
Barge Pump P-301 operates in accordance with the local switch HS-303A;
a) When HS-303A is in HAND position, P-301 runs.
b) When HS-303A is in OFF position, P-301 is de-energized and does not run.
c) When HS-303A is in REMOTE position, P-301 operates according to selections at the HMI of HS-303B;
(1) When HS-303B is in ON position, P-301 runs.
(2) When HS-303B is in OFF position, P-301 is de-energized and does not run.
3) Indications at the HMI:
a) KQI-303: Pump run hours (since last reset).
b) XA-303A: Pump failed to start within 10 seconds of a PLC command to do so.
c) XA-303B: Pump Overload.
d) YI-303A: Pump running.
e) YI-303B: Pump control in Remote.

d. Control Loop 310 – Site Power Monitoring:
1) Major Equipment:
a) PLC 300.
b) Water Plant and remote HMI.
2) Indications at HMI:
a) XA-310: Loss of utility Power at PLC.

e. Control Loop 311 – UPS Monitoring:
1) Major Equipment:
a) PLC 300.
b) Water Plant and remote HMI.
c) PLC UPS.
2) Indications at the HMI:
a) XA-311A: UPS Fault Alarm.
b) XA-311B: UPS on battery Alarm.

f. Control Loop 312 – Sunday Pit Genset:
1) Major Equipment:
a) PLC-300.
b) Water Plant and remote HMI.
c) Site Generator (Existing).
2) Control Logic:

a) XA-312: Generator general trouble alarm. This alarm is documented in the PLC Historian. This is a general notification alarm if the genset is not running and a priority one notification if it is. A genset general alarm that occurs while there is no site power will activate the autodialer.
b) YI-312: Generator running indication.

3) Indications at the HMI, OIT:
a) XA-312: Generator general trouble alarm.
b) YI-312: Generator running indication

g. Control Loop 313 – Tramont Fuel Unit:
1) Major Equipment:
a) PLC 300.
b) Water Plant and remote HMI.
c) Tramont Fuel Unit (Existing).

2) Indications at the HMI, OIT:
a) LAH-313A: High day tank level.
b) LAH-313B: Fuel in rupture Basin.
c) LAL-313: Low day tank level.
d) XA-313: Day tank system trouble.

h. Control Loop 314 – Automatic Transfer Switch:
1) Major Equipment:
a) PLC 300.
b) Water Plant and remote HMI.
c) Automatic Transfer Switch (Existing).

2) Control Logic:
a) When the ATS position is not NORMAL, all alarms associated with the Tramont fuel unit (Day Tank) and the generator are elevated to critical alarms.

3) Indications at the HMI, OIT:
a) XA-314: ATS trouble.
b) YI-314A: ATS in NORMAL Position.
c) YI-314B: ATS in EMERGENCY Position.

i. Control Loop 315 – Heat Trace Control:
1) Major Equipment:
a) PLC 300.
b) Water Plant and remote HMI.
c) Heat Trace Panel HTP-301.

2) Major Field Instruments:
a) TSL-315: Ambient air temperature switch.
b) ISL-315: Low current switch (inside HTP-301).

3) Control Logic:
a) Operation of the heat trace is in accordance with the position of the local switch HS-315A:
(1) When HS-315A is in ON position the heat trace is energized.
(2) When HS-315A is in AUTO position heat trace is controlled by the PLC via operator switch HS-315B:
(a) If HS-315B is in AUTO position; the heat trace cycles on and off based on the operation of the ambient temperature switch TSL-315.
(b) If HS-315B is in MANUAL position; heat trace can be turned on or off by the operator. A position other than AUTO is documented and alarmed.

4) Indications at the HMI:
a) XA-315: Heat trace fault. This is a critical alarm.
b) TSL-315: Indication that the heat trace should be active.

j. Control Loop 316 – Heat Trace Control:
1) Major Equipment:
a) PLC 300.
b) Water Plant and remote HMI.

c) Heat Trace Panel HTP-302.

2) Major Field Instruments:
   a) TSL-316: Ambient air temperature switch.
   b) ISL-316: Low current switch (inside HTP-302).
3) Control Logic:
   a) Operation of the heat trace is in accordance with the position of the local switch HS-316A:
      (1) When HS-316A is in ON position the heat trace is energized.
      (2) When HS-316A is in AUTO position heat trace is controlled by the PLC via operator switch HS-105B:
         (a) If HS-316B is in AUTO position; the heat trace cycles on and off based on the operation of the ambient temperature switch TSL-315.
         (b) If HS-316B is in MANUAL position; heat trace can be turned on or off by the operator. A position other than AUTO is documented and alarmed.
4) Indications at the HMI:
   a) XA-316: Heat trace fault. This is a critical alarm.

D. RTU-4: Strawberry Pond:

Strawberry Pond is the collection hub for all water that passes through the treatment plant. It has a pump station with three pumps. P-401 is dedicated to water plant feed. P-402 comes on at high level in Strawberry pond and transfers water to the Anchor Hill Pit. P-403 can act as a backup to P-401 but primarily transfers excess water from Strawberry Pond to Sunday Pit if there is a High High level in Strawberry pond. When water is being transferred to Sunday pit via P-403, the water plant must go offline since the open diverter valve to Sunday pit will stop flow to the water plant.

a. Control Loop 400 – Strawberry Genset:
   1) Major Equipment:
      a) PLC-400.
      b) Water Plant and remote HMI.
      c) Site Generator.
   2) Control Logic:
      a) XA-400: Generator general trouble alarm. This alarm is documented in the PLC Historian. This is a general notification alarm if the genset is not running and a priority one if it is. A genset general alarm that occurs while there is no site power will activate the autodialer.
      b) YI-400: Generator running indication.
   3) Indications at the HMI:
      a) XA-400: Generator general trouble alarm.
      b) YI-400: Generator running indication
b. Control Loop 401 – Tramont Fuel Unit:
   1) Major Equipment:
      a) PLC 400.
      b) Water Plant and remote HMI.
      c) Tramont Fuel Unit.
   2) Indications at the HMI:
      a) LAH-401A: High day tank level.
      b) LAH-401B: Fuel in rupture Basin.
      c) LAL-401: Low day tank level.
      d) XA-401: Day tank system trouble.
c. Control Loop 402 – Automatic Transfer Switch:
   1) Major Equipment:
      a) PLC 400.
      b) Water Plant and remote HMI.

c) Automatic Transfer Switch.

2) Control Logic:

a) When the ATS position is not NORMAL, all alarms associated with the Tramont fuel unit (Day Tank) and the generator are elevated to critical alarms.

3) Indications at the HMI:

a) XA-402: ATS trouble.

b) YI-402A: ATS in normal Position.

c) YI-402B: ATS in emergency position .

d. Control Loop 403 – Strawberry Pond Level Transmitter:

1) Major Equipment:

a) PLC 400.

b) Water Plant and remote HMI.

2) Major Field Instruments:

a) LT-403: Strawberry Pond Level Transmitter.

3) Indications at the HMI:

a) LI-403: Strawberry Pond Level.

b) LAH-403: High level in Strawberry Pond.

c) LAHH-403: High-High level in Strawberry Pond.

e. Control Loop 404 – Water Plant Feed Loop:

1) Major Equipment:

a) PLC 400.

b) Water Plant and remote HMI.

2) Major Field Instruments:

a) Existing Water Plant feed rate transmitter FIT-0200.

3) Control Logic:

a) The water plant inflow meter, FIT-0200 provides the Process variable to flow controller FIC-404. To reduce radio traffic, this data will be sent to a holding register at the Strawberry Pit PLC and FIC-404 will use this register value as it process variable. This remote (Strawberry PLC) register will be updated once a minute or when the deviation between the stored value and the actual process value exceeds an operator adjustable setting. This deviation setting can be adjusted to a maximum of 5% and is set originally set at 3%.

b) FIC-404 sends a setpoint to the VFDs for P-401 and P-403 to maintain plant federate at an operator adjustable setpoint.

4) Indications at the HMI:

a) FI-404: Water Plant inflow reading.

f. Control Loop 405 – Heat Trace Control:

1) Major Equipment:

a) PLC 400.

b) Water Plant and remote HMI.

c) Heat Trace Panel HTP-400.

2) Major Field Instruments:

a) TSL-405: Ambient air temperature switch.

b) ISL-405: Low current switch.

3) Control Logic:

a) Operation of the heat trace is in accordance with the position of the local switch HS-405A:

(1) When HS-405A is in ON position the heat trace is energized.

(2) When HS-405A is in AUTO position heat trace is controlled by the PLC via operator switch HS-405B:

(a) If HS-405B is in AUTO position; the heat trace cycles on and off based on the operation of the ambient temperature switch TSL-405.

(b) If HS-405B is in MANUAL position; heat trace can be turned on or off by the operator. A position other than AUTO is documented and alarmed.

4) Indications at the HMI:

a) TAL-405: Ambient temperature below 40 DegF, heat trace is active.
b) XA-405: Heat trace trouble.

g. Control Loop 406 – Room Temperature Monitor:
1) Major Equipment:
a) PLC 400.
b) Water Plant and remote HMI.
2) Major Field Instruments:
a) TSL-406: Room temperature low alarm (below 40 DEGF).
3) Indications at the HMI:
a) TAL-406: Low room temperature alarm.

h. Control Loop 407 - Loss of Power Alarm:
1) Major Equipment:
a) PLC 400.
b) Water Plant and remote HMI.
2) Major Field Instruments:
a) 120VAC relay in PLC panel.
3) Indication at the HMI:
a) XA-407: Loss of power at Strawberry Pond Pump Station.

i. Control Loop 408 – Strawberry Pond Low Level Alarm:
1) Major Equipment:
a) PLC 400.
b) Water Plant and remote HMI.
2) Major Field Instrument:
a) LSL-408: Low Level float switch
3) Control Logic:
a) Activation of LSL-408 will stop all pumps at the Strawberry Pond.
4) Indication at the HMI:
a) LAL-408: Strawberry Pond Low Level Alarm and Pump Shutdown.

j. Control Loop 410 – Pump P-401 Control:
1) Major Equipment:
a) PLC 400.
b) Water Plant and remote HMI.
c) Water Plant Feed Pump P-401 and its Variable Frequency Drive.
2) Control Logic:
a) Control of the VFD for P-401, Water Plant feed pump is in accordance with the position of the HAND-OFF-REMOTE switch on the face of the drive;
(1) When the switch is in HAND position, the pump runs at a setpoint entered on the door of the drive.
(2) When the switch is in OFF position, the pump is de-energized and does not run.
(3) When the switch is in REMOTE position, the pump operates in accordance with the HMI controller SIC-410 selections;
(a) When SIC-410 is in MANUAL position, the operator can control pump speed from the HMI screen.
(b) When SIC-410 is in AUTO position, the speed of the pump varies as required to maintain a controlled flow to the water plant. It will do this as long as P-403 is OFF. If P-403 is ON, then P-401 stops and the water plant is put into HOLD by opening existing water plant valve FV-0215 and closing existing water plant valve FV-210. Refer to the existing plant P&ID I-2, included as reference drawings.
3) Indications at the HMI:
a) KQI-410: P-401 run hours (since last reset).
b) SI-410: Actual pump speed in percent.
c) SC-410: Requested pump speed in percent.
d) XA-410A: Pump failed to start within 15 seconds of a PLC command to do so.
e) XA-410B: VFD Fault.

f) YI-410A: Pump P-401 running.
g) YI-410B: P-401 VFD door switch in Remote position.

k. Control Loop 420 – Pump P-402 Control:
1) Major Equipment:
a) PLC 400.
b) Water Plant and remote HMI.
c) Anchor Pit Feed pump P-402 and its Variable Frequency Drive.
2) Control Logic:
a) Control of the VFD for P-402, Anchor Pit feed pump, is in accordance with the position of the HAND-OFF-REMOTE switch on the face of the drive;
(1) When the switch is in HAND position, the pump runs at a setpoint entered on the door of the drive.
(2) When the switch is in OFF position, the pump is de-energized and does not run.
(3) When the switch is in REMOTE position, the pump operates in accordance with the HMI controller SIC-420 selections;
(a) When SIC-420 is in MANUAL position, the operator can control the pump and its speed from the HMI or OIT screen.
(b) When SIC-420 is in AUTO position, P-402 is controlled by a high level in the Strawberry pond via an operator adjustable setpoint at LI-403, labeled LAH-403. When LAH-403 point is reached for more than 10 minutes, P-402 will start at an operator adjustable fixed speed. This speed is only adjustable from 85 to 100 %. Once LAH-403 clears by an operator adjustable deadband for more than 10 minutes, P-402 will stop.
3) Indications at the HMI:
a) KQI-420: P-402 run hours (since last reset).
b) SI-420: Actual pump speed in percent.
c) SC-420: Requested pump speed in percent.
d) XA-420A: Pump failed to start within 15 seconds of a PLC command to do so.
e) XA-420B: VFD Fault.
f) YI-420A: Pump P-402 running.
g) YI-420B: P-402 VFD door switch in Remote position.

l. Control Loop 430 – Pump P-403 Control:
1) Major Equipment:
a) PLC 400.
b) Water Plant and remote HMI.
c) Sunday Pit Transfer Pump P-403 and its Variable Frequency Drive.
2) Control Logic:
a) Control of the VFD for P-403, Water Plant feed pump is in accordance with the position of the HAND-OFF-REMOTE switch on the face of the drive;
(1) When the switch is in HAND position, the pump runs at a setpoint entered on the door of the drive.
(2) When the switch is in OFF position, the pump is de-energized and does not run.
(3) When the switch is in REMOTE position, the pump operates in accordance with the HMI controller SIC-430 selections;
(a) When SIC-430 is in MANUAL position, the operator can control the pump and speed from the HMI screen.
(b) When SIC-430 is in AUTO position, Pump P-403 can follow two operational protocols;

1.) If P-401 is operating normally and supplying water to the treatment plant, then P-403 is controlled by the level in the Strawberry Pond. When the operator adjustable LAHH-403 is exceeded for more than 10 minutes (adjustable) P-403 will start. This will cause P-401 to stop and the water plant to go on hold. A High-High level will also cause FV-301 to open, diverting water to the Sunday Pit.
2.) If P-401 is out of service, then P-403 acts as the feed pump to the water plant. It will control in the same manner as P-401 to control water feed to the plant. If there is a High-High level excursion as seen by LAHH-403, the pump will go to manual set speed (between 85 and 100%) and the water plant will go to hold. Water is then diverted to Sunday Pit.
3.) In a High-High level recovery, the level will drop below an operator adjustable deadband for 10 minutes at which time P-403 will stop and FV-301 will close.

3) Indications at the HMI:
   a) KQI-430: P-403 run hours (since last reset).
   b) SI-430: Actual pump speed in percent.
   c) SC-430: Requested pump speed in percent.
   d) XA-430A: Pump failed to start within 15 seconds of a PLC command to do so.
   e) XA-430B: VFD Fault.
   f) YI-430A: Pump P-403 running.
   g) YI-430B: P-403 VFD door switch in Remote position.

m. Control Loop 440 – Last Chance Pond Pump Alarm:
   1) Major Equipment:
      a) PLC 400.
      b) Water Plant and remote HMI.
      c) Last Chance Pond Submersible Pump Starter.
   2) Indications at the HMI:
      a) ISL-440: Low motor current.

E. RTU-5: Water Treatment Plant (Existing):

There will be some modification to the existing water plant PLC program and extensive re-work of the HMI screens and data historian. This is described in Appendix B of the "Automation Improvements" report. Changes in operating alarms and conditions are listed in Appendix I of the report. The points listed below are the new points added as a part of this project. Existing controls modifications are covered in Appendixes B and I, as mentioned above.

a. Control Loop Control Loop500 – Water Plant Genset:
   1) Major Equipment:
      a) Water Plant PLC (Existing).
      b) Water Plant and remote HMI.
      c) Water Plant Site Generator.
   2) Control Logic:
      a) XA-500: Generator general trouble alarm. This alarm is documented in the PLC Historian. This is a general notification alarm if the genset is not running and a priority one notification if it is. A genset general alarm that occurs while there is no site power will activate the autodialer.
      b) YI-500: Generator running indication.
   3) Indications at the HMI:
      a) XA-500: Generator general trouble alarm.

b) YI-500: Generator running indication

b. Control Loop 501 – Tramont Fuel Unit:
   1) Major Equipment:
      a) Water Plant PLC (Existing).
      b) Water Plant and remote HMI.
      c) Tramont Fuel Unit.
   2) Indications at the HMI:
      a) LAH-501A: High day tank level.
      b) LAH-501B: Fuel in rupture Basin.
      c) LAL-501: Low day tank level.
      d) XA-501: Day tank system trouble.

c. Control Loop 502 – Automatic Transfer Switch:
   1) Major Equipment:
      a) Water Plant PLC (Existing).
      b) Water Plant and remote HMI.
      c) Automatic Transfer Switch.
   2) Control Logic:
      a) When the ATS position is not NORMAL, all alarms associated with the Tramont fuel unit (Day Tank) and the generator are elevated to critical alarms.
   3) Indications at the HMI:
      a) XA-502: ATS trouble.
      b) YI-502A: ATS in normal Position.
      c) YI-502B: ATS in emergency position .

F. RTU-6: Anchor Hill Pit:

Anchor Hill Pit will have a radio connected PLC installed at the electrical equipment rack. The PLC will monitor and control the existing barge pump and one existing valve that will be retrofitted with an electric actuator. These and other miscellaneous alarms are defined below.

a. Control Loop 601 – Barge Pump P-601 Control:
   1) Major Equipment:
      a) PLC-600.
      b) Water Plant and remote HMI.
      c) Barge Pump P-601 starter.
   2) Control Logic:
      Barge Pump P-601 operates in accordance with the local switch HS-601A;
      a) When HS-601A is in HAND position, P-601 runs.
      b) When HS-601A is in OFF position, P-601 is de-energized and does not run.
      c) When HS-601A is in REMOTE position, P-601 operates according to selections at the HMI of HS-602B;
         (1) When HS-602B is in ON position, P-601 runs.
         (2) When HS-602B is in OFF position, P-601 is de-energized and does not run.
   3) Indications at the HMI:
      a) KQI-601: Pump run hours (since last reset).
      b) XA-601A: Pump failed to start within 10 seconds of a PLC command to do so.
      c) XA-601B: Pump Overload.
      d) YI-601A: Pump running.
      e) YI-601B: Pump control in Remote.

b. Control Loop 602 – Anchor Hill Pit Dump Valve:
   1) Major Equipment:
      a) PLC-600.
      b) Water Plant and remote HMI.
   2) Major Field Instruments:

a) FV-601: Anchor Hill Pit Dump Valve Actuator.

3) Control Logic:

a) FV-601 operates in accordance with the position of its local switch HS-602A;

(1) When HS-602A is in LOCAL position, FV-601 is controlled by the local OPEN, CLOSE and STOP pushbuttons.

(2) When HS-602A is in OFF position, FV-601 is locked in its last position and does not move.

(3) When HS-602A is in REMOTE position, FV-601 operates in accordance with the selection of HS-602E at the HMI;

(a) When HS-602E is in MANUAL, FV-601 can be controlled from the HMI screen.

(b) When HS-602E is in AUTO, FV-601 position is determined by PLC interlocks. When the Strawberry Pond level gets too high (LAH-403), FV-601 will open and the feedwater to Strawberry Pit is recirculated back into Anchor Hill Pit. If there is a lack of communication between the Anchor Hill PLC and the Sunday Pit PLC for an operator adjustable time (initially set at 10 minutes), FV-601 will open and Anchor Hill Pit will go into recirculation mode.

4) Indications at the HMI:

a) XA-602: FV-601 valve actuator trouble alarm.

b) YI-602: HV-601 in Remote.

c) ZCI-602: FV-601 Closed Indication.

d) ZOI-602: FV-601 Open Indication.

c. Control Loop 610 – Site Power Monitoring:

1) Major Equipment:

a) PLC 600.

b) Water Plant and remote HMI.

2) Indications at HMI:

a) XA-610: Loss of utility Power at PLC.

d. Control Loop 611 – UPS Monitoring:

1) Major Equipment:

a) PLC 600.

b) Water Plant and remote HMI.

c) PLC UPS.

2) Indications at the HMI:

a) XA-611A: UPS Fault Alarm.

b) XA-611B: UPS on battery Alarm.

e. Control Loop 612 – Sunday Pit Genset:

1) Major Equipment:

a) PLC-600.

b) Water Plant and remote HMI.

c) Site Generator (Existing).

2) Control Logic:

a) XA-612: Generator general trouble alarm. This alarm is documented in the PLC Historian. This is a general notification alarm if the genset is not running and a priority one notification if it is. A genset general alarm that occurs while there is no site power will activate the autodialer.

b) YI-612: Generator running indication.

3) Indications at the HMI, OIT:

a) XA-612: Generator general trouble alarm.

b) YI-612: Generator running indication

f. Control Loop 613 – Automatic Transfer Switch:

1) Major Equipment:

a) PLC 600.

b) Water Plant and remote HMI.

c) Automatic Transfer Switch (Existing).

2) Control Logic:
   a) When the ATS position is not NORMAL, all alarms associated with the Tramont fuel unit (Day Tank) and the generator are elevated to critical alarms.
3) Indications at the HMI, OIT:
   a) XA-613: ATS trouble.
   b) YI-613A: ATS in NORMAL Position.
   c) YI-613B: ATS in EMERGENCY Position.

g. Control Loop 614 – Tramont Fuel Unit:
1) Major Equipment:
   a) PLC 600.
   b) Water Plant and remote HMI.
   c) Tramont Fuel Unit (Existing).
2) Indications at the HMI, OIT:
   a) LAH-614A: High day tank level.
   b) LAH-614B: Fuel in rupture Basin.
   c) LAL-614: Low day tank level.
   d) XA-614: Day tank system trouble.

h. Control Loop 615 – Heat Trace Control:
1) Major Equipment:
   a) PLC 600.
   b) Water Plant and remote HMI.
   c) Heat Trace Panel HTP-600.
2) Major Field Instruments:
   a) TSL-615: Ambient air temperature switch.
   b) ISL-615: Low current switch (inside HTP-301).
3) Control Logic:
   a) Operation of the heat trace is in accordance with the position of the local switch HS-615A:
      (1) When HS-615A is in ON position the heat trace is energized.
      (2) When HS-615A is in AUTO position heat trace is controlled by the PLC via operator switch HS-615B:
         (a) If HS-615B is in AUTO position; the heat trace cycles on and off based on the operation of the ambient temperature switch TSL-615.
         (b) If HS-615B is in MANUAL position; heat trace can be turned on or off by the operator. A position other than AUTO is documented and alarmed.
4) Indications at the HMI:
   a) XA-615: Heat trace fault. This is a critical alarm.
   b) TSL-615: Indication that the heat trace should be active.

G. **RTU 7: OFFICE AREA:**

a. Control Loop 700 – Site Power Monitoring:
1) Major Equipment:
   a) PLC 700.
   b) Water Plant and remote HMI.
2) Indications at HMI:
   a) XA-700: Loss of utility Power at PLC.

b. Control Loop 701 – Tramont Fuel Unit:
1) Major Equipment:
   a) PLC 700.
   b) Water Plant HMI and Ruby Repository OIT.
   c) Tramont Fuel Unit (Existing).
2) Indications at the HMI:
   a) LAH-701A: High day tank level.
   b) LAH-701B: Fuel in rupture Basin.
   c) LAL-701: Low day tank level.

d) XA-701: Day tank system trouble.

c. Control Loop 702 – Office Genset:
   1) Major Equipment:
      a) PLC-700.
      b) Water Plant and remote HMI.
      c) Site Generator (Existing).
   2) Control Logic:
      a) XA-702: Generator general trouble alarm. This alarm is documented in the PLC Historian. This is a general notification alarm if the genset is not running and a priority one notification if it is. A genset general alarm that occurs while there is no site power will activate the autodialer.
      b) YI-702: Generator running indication.
   3) Indications at the HMI, OIT:
      a) XA-702: Generator general trouble alarm.
      b) YI-702: Generator running indication

d. Control Loop 703 – Automatic Transfer Switch:
   1) Major Equipment:
      a) PLC 700.
      b) Water Plant and remote HMI.
      c) Automatic Transfer Switch (Existing).
   2) Control Logic:
      a) When the ATS position is not NORMAL, all alarms associated with the Tramont fuel unit (Day Tank) and the generator are elevated to critical alarms.
   3) Indications at the HMI:
      a) XA-703: ATS trouble.
      b) YI-703A: ATS in NORMAL Position.
      c) YI-703B: ATS in EMERGENCY Position.

e. Control Loop 704 – UPS Monitoring:
   1) Major Equipment:
      a) PLC 700.
      b) Water Plant and remote HMI.
      c) PLC UPS.
   2) Indications at the HMI:
      a) XA-704A: UPS Fault Alarm.
      b) XA-704B: UPS on battery Alarm.

END OF SECTION

2014/04/01

SECTION 13446
CONTROL AUXILIARIES

PART 1 - GENERAL

1.1 SUMMARY

A. Section Includes:
1. Pilot devices:
   a. Selector switches.
   b. Pushbuttons.
   c. Indicating lights.
2. Relays/timers:
   a. Control relay.
   b. Time delay relays.
3. Termination equipment:
   a. Terminal blocks.
   b. Fuse holders.
4. Power supplies:
   a. DC power supplies.
5. Voltage surge protection devices.

B. Related Specification Sections include but are not necessarily limited to:
1. Division 00 - Bidding Requirements, Contract Forms, and Conditions of the Contract.
2. Division 01 - General Requirements.
3. Section 13440 - Instrumentation for Process Control: Basic Requirements.
4. Section 16491 - Low Voltage Surge Protective Devices (SPD).

1.2 QUALITY ASSURANCE

A. Referenced Standards:
1. The Instrumentation, Systems, and Automation Society (ISA):
   a. S18.1, Annunciator Sequences and Specifications.
2. National Electrical Manufacturers Association (NEMA):
   a. 250, Enclosures for Electrical Equipment (1000 Volts Maximum).
   b. ICS 2, Industrial Control and Systems: Controllers, Contactors, and Overload Relays Rated 600 Volts.
3. Underwriters Laboratories, Inc. (UL).

B. Miscellaneous:
1. Assure units comply with electrical area classifications and NEMA enclosure type shown on Drawings.

1.3 SUBMITTALS

A. Shop Drawings:
1. See Specification Section 01340 for requirements for the mechanics and administration of the submittal process.
2. See Specification Section 13440.

B. Operation and Maintenance Manuals:
1. See Specification Section 01342 for requirements for:
   a. The mechanics and administration of the submittal process.
   b. The content of Operation and Maintenance Manuals.

PART 2 - PRODUCTS

2.1 ACCEPTABLE MANUFACTURERS

A. Subject to compliance with the Contract Documents, the manufacturers listed in the applicable Articles below are acceptable.

B. Provide similar components from the same manufacturer for uniformity of appearance, operations, and maintenance.

C. Submit request for substitution in accordance with Specification Section 01640.

2.2 PILOT DEVICES

A. Selector Switches:
   1. Acceptable manufacturers:
      a. Eaton.
      b. Allen-Bradley.
   2. Design and fabrication:
      a. Heavy-duty type.
      b. NEMA 4.
      c. Rotary cam units conforming to NEMA ICS 2-216.22.
      d. Mounting hole: 30.5 mm.
      e. Supply switches having number of positions required with contact blocks to fulfill functions shown and specified.
      f. UL listed.
      g. Maintained contact type.
      h. Knob type operators.
      i. Black colored operators.
      j. Designed with cam and contact block with approximate area of 2 IN SQ.
      k. Legend plate marked per Contract Documents.
      l. Contact block requirements:
         1) Dry and indoor locations: Standard contact blocks rated for 10 A continuous current.
         2) Wet or outside locations: Hermetically sealed contact blocks.

B. Pushbuttons:
   1. Acceptable manufacturers:
      a. Eaton.
      b. Allen-Bradley.
   2. Materials:
      a. Backing diaphragm: Buna-N.
   3. Design and fabrication:
      a. Heavy-duty type NEMA4.
      b. Conforming to NEMA ICS 2-216.22.
      c. Mounting hole: 30.5 mm.
      d. Diaphragm backed.
      e. UL listed.
      f. Emergency stop pushbuttons to have mushroom head operator and maintained contact.
      g. Non-illuminated type:
         1) Momentary contact with necessary contact blocks.
         2) Molded, solid color melamine buttons.
         3) Standard flush operators with no shroud.
         4) Red colored buttons for START or ON and Green color for STOP or OFF.
         5) Appropriate contact blocks to fulfill functions shown or specified.
      h. Contact block requirements:
         1) Dry and indoor locations: Standard contact blocks rated for 10 A continuous current.

2) Wet or outside locations: Hermetically sealed contact blocks.
3) Legend plate marked per Contract Documents.

C. Indicating Lights:
1. Acceptable manufacturers:
a. Eaton.
b. Allen-Bradley.
2. Design and fabrication:
a. Heavy duty.
b. NEMA 4.
c. Type allowing replacement of bulb without removal from control panel.
d. LED.
e. UL listed.
f. 24 V lamp.
g. Legends marked per Contract Documents.
h. Nominal 2 IN SQ face.
i. Mounting hole: 30.5 mm.
j. Push-to-test indicating lights.
k. Glass lens.
l. Color code lights as follows:
1) Green: OFF or stopped; valve closed.
2) Amber: Standby; auto mode; ready.
3) Red: ON or running; valve open.
m. Legend plate engraved for each light.

2.3 RELAYS/TIMERS

A. Control Relays:
1. Acceptable manufacturers:
a. Idec.
b. Potter & Brumfield.
c. Allen-Bradley.
2. Design and fabrication:
a. Plug-in general purpose relay.
b. Blade connector type.
c. Switching capacity: 5 A.
d. Contact material: Silver cadmium oxide.
e. Provide relays with a minimum of 2 SPDT contacts.
f. Coil voltage: 120 Vac or 24 Vdc.
g. Relay sockets are DIN rail mounted.
h. Internal neon or LED indicator is lit when coil is energized.
i. Clear polycarbonate dust cover with clip fastener.
j. Check button.
k. Temperature rise:
1) Coil: 85 DegF max.
2) Contact: 65 DegF max.
l. Insulation resistance: 100 Meg min.
m. Frequency response: 1800 operations/hour.
n. Operating temperature: -20 to +150 DegF.
o. Life expectancy:
1) Electrical: 500,000 operations or more.
2) Mechanical: 10,000,000 operations or more.
p. UL listed or recognized.

B. Time Delay Relays:
1. Acceptable manufacturers:
a. Eagle Signal Controls.

b. Idec.
2. Design and fabrication:
a. Melt design test and performance requirements of NEMA ICS 2-218.
b. Heavy-duty.
c. Solid-state construction.
d. Externally adjustable.
e. Auxiliary relays as required to perform functions specified or shown on Drawings.
f. Operates on 117 Vac (±10 percent) power source.
g. Contact rating: A150 per NEMA ICS 2-125.
h. Furnish with "on" and "timing out" indicators.

2.4 TERMINATION EQUIPMENT

A. Terminal Blocks:
1. Acceptable manufacturers:
a. Phoenix Contact.
b. Allen-Bradley.
2. Design and fabrication:
a. Modular type with screw compression clamp.
b. Screws: Stainless steel.
c. Current bar: Nickel-plated copper allow.
d. Thermoplastic insulation rated for -40 to +90 DegC.
e. Wire insertion area: Funnel-shaped to guide all conductor strands into terminal.
f. Install end sections and end stops at each end of terminal strip.
g. Install machine-printed terminal markers on both sides of block.
h. Spacing: 6 mm.
i. Wire size: 22-12 AWG.
j. Rated voltage: 600 V.
k. Din rail mounting.
l. UL listed.
3. Standard-type block:
a. Rated current: 30 A.
b. Color: Gray body.
4. Bladed-type block:
a. Terminal block with knife blade disconnect which connects or isolated the two (2) sides of the block.
b. Rated current: 10 A.
c. Color:
1) Panel control voltage leaves enclosure - normal: Gray body, orange switch.
2) Foreign voltage entering enclosure: Orange body, orange switch.
5. Grounded-type block:
a. Electrically grounded to mounting rail.
b. Use to terminal ground wires and analog cable shields.
c. Color: Green and yellow body.

B. Fuse Holders:
1. Acceptable manufacturers:
a. Phoenix Contact.
b. Allen-Bradley.
2. Design and fabrication:
a. Modular-type with screw compression clamp.
b. Screws: Stainless steel.
c. Current bar: Nickel-plated copper alloy.
d. Thermoplastic insulation rated for -40 to +105 DegC.
e. Wire insertion area: Funnel-shaped to guide all conductor strands into terminal.
f. Blocks can be ganged for multi-pole operation.
g. Install end sections and end stops at each end of terminal strip.

h. Install machine-printed terminal markers on both sides of block.
i. Spacing: 9.1 mm.
j. Wire size: 30-12 AWG.
k. Rated voltage: 300 V.
l. Rated current: 12 A.
m. Fuse size: 1/4 x 1-1/4.
n. Blown fuse indication.
o. DIN rail mounting.
p. UL listed.

2.5 POWER SUPPLIES

A. DC Power Supplies:
1. Acceptable manufacturers:
a. Sola Hevi-Duty.
b. Phoenix Contact.
c. Rockwell Automation.
2. Design and fabrication:
a. Converts 120 Vac input to DC power at required voltage.
b. DIN rail mount with enclosure (i.e., not open frame).
c. Switching type.
d. AC input: 120 Vac +/-15 percent, nominal 60 Hz.
e. Efficiency: Minimum 86 percent.
f. Rated mean time between failure (MTBF): 500,000 HRS.
g. Voltage regulation:
1) Static: Less than 1.0 percent V_{out}.
2) Dynamic: +/-2 percent V_{out} overall.
h. Output ripple/noise: Less than 100 mV peak to peak (20 MHz).
i. Overload, short circuit and open circuit protection.
j. Temperature rating: 0 to 60 DegC full rated, derated linearly to 50 percent at 70 DegC.
k. Humidity rating: Up to 90 percent, non-condensing.
l. LED status indication for DC power.

2.6 VOLTAGE SURGE PROTECTION DEVICES

A. See Specification Section 16491.

PART 3 - EXECUTION

3.1 INSTALLATION

A. Install products in accordance with manufacturer's instructions.

END OF SECTION

2014/04/01

SECTION 13447
TELEMETRY SYSTEMS

PART 1 - GENERAL

1.1 SUMMARY

A. Section Includes:
1. Items required include but are not necessarily limited to the following:
a. Radios.
b. Antennas, masts, and associated appurtenances.
c. RTUs (Remote Terminal Units).

B. Related Specification Sections include but are not necessarily limited to:
1. Division 00 - Bidding Requirements, Contract Forms, and Conditions of the Contract.
2. Division 01 - General Requirements.
3. Section 10400 - Identification Devices.
4. Section 13446 - Control Auxiliaries.
5. Section 13448 - Control Panels and Enclosures.
6. Section 13449 - Surge Protection Devices (SPD) For Instrumentation and Control Equipment.

1.2 QUALITY ASSURANCE

A. Referenced Standards:
1. Federal Communications Commission (FCC):
a. 47 CFR 15 - Radio Frequency Devices, Section 15.247 - Operation within the bands 902 - 928 MHz, 2400 - 2483.5 MHz, and 5725 - 5850 MHz.
2. International Electrotechnical Commission (IEC):
a. 61131-3 - Programmable Controllers, Part 3: Programming Languages.
3. Institute of Electrical and Electronics Engineers, Inc. (IEEE):
a. 802.3, Information Processing Systems - Local Area Networks - Part 3: Carrier Sense Multiple Access with Collision Detection (CSMA/CD) Access Method and Physical Layer Specifications.
4. Telecommunications Industry Association/Electronic Industries Alliance/American National Standards Institute (TIA/EIA/ANSI):
a. 222-G, Structural Standards for Steel Antenna Towers and Antenna Supporting Structures.
5. Underwriters Laboratories, Inc. (UL):
a. 508A, Standard for Safety Industrial Control Panels.

1.3 DEFINITIONS

A. ARQ (Automatic Resend Query): Method of error correction where the receiver initiates an order to retransmit data blocks that are determined to be corrupted in transmission.

B. BER (Bit Error Rate):
1. Ratio of the number of bits received in error to the total number of bits transmitted.
2. Used as a measure of quality for data links.

C. CRC (Cyclic Redundancy Check):
1. A method utilized for detecting errors in data transmission or storage.
2. A number is calculated on the originating end based on the message contents, and then appended to the message before transmission.

3. The CRC is re-calculated on the receiving end, and compared to the previously calculated value.
4. A match of the two (2) calculated values indicates a high probability that the message was received correctly.

D. Omnidirectional Antenna: An antenna that radiates maximum power uniformly 360 degrees in the horizontal plane.

E. RTU (Remote Terminal Unit):
1. A remotely located device that collects data, codes the data into a format that is transmittable and transmits the data back to a central Supervisory Control and Data Acquisition (SCADA) system.
2. The RTU also receives communication from the SCADA system and implements processes as directed.

F. Spread Spectrum:
1. Communications technique whereby a radio frequency signal is spread (modulated) in order to generate an expanded bandwidth signal.
   a. Frequency Hopping Spread Spectrum: Communications technique where the frequency of the radio signal repeatedly “hops” from one (1) frequency to another in accordance with a random but predictable sequence.
   b. Direct Sequence Spread Spectrum: Communications technique whereby the stream of information (data signal) is combined with a higher data-rate bit sequence, or chipping code, that divides the user data according to a spreading ratio.

G. Yagi Antenna:
1. A uni-directional radio antenna, consisting of a driven element, a reflector, and one or more directors.
2. The antenna is primarily used for frequencies above 10 MHz and are used only in point-to-point applications.

1.4 SUBMITTALS

A. Shop Drawings:
1. See Specification Section 01340 for requirements for the mechanics and administration of the submittal process.
2. Product technical data:
   a. Annotated hard copies of RTU software programs.
      1) Annotate program listing to include the following (as applicable):
         a) Descriptive titles for all subroutine functions.
         b) Reference to control loop numbers.
         c) Reference to instrumentation and equipment tag numbers.
      2) Define all function blocks used in program.
      3) Provide listing of all addresses referenced in logic diagram with description of data associated with each address.
   b. Manufacturer's installation instructions.
3. Submit all catalog cut sheets under Specification Section 13447 submittals.

B. Operation and Maintenance Manuals:
1. See Specification Section 01342 for requirements for:
   a. The mechanics and administration of the submittal process.
   b. The content of Operation and Maintenance Manuals.

C. Informational Submittals:
1. Radio site survey results including the following minimum information:
   a. Electromagnetic noise level at each site.
   b. Data rate for each radio.
   c. Received radio signal strength at installed antenna height for each radio.

d. Fade margin in dB (difference between weakest signal the radio can read and actual received signal strength).

2. List of all recommended spares for maintenance purposes with each item separately priced.
   a. List shall include all special tools and test equipment necessary for the maintenance of the complete system.
3. Results of factory testing procedures.

PART 2 - PRODUCTS

2.1 ACCEPTABLE MANUFACTURERS

A. Subject to compliance with the Contract Documents, the manufacturers listed in the applicable Articles below are acceptable.

B. Submit request for substitution in accordance with Specification Section 01640.

2.2 RADIOS

A. Acceptable Manufacturers:
   1. Microwave Data Systems (MDS).
   2. Locus, Inc, OS2400 series.
   3. Data-Linc Group.
   4. DataRadio COR Limited.

B. Design and Fabrication:
   1. Communication:
      a. Type:
         1) High speed Ethernet.
         2) Ethernet communication in accordance with IEEE 802.3.
         3) Color video imagery at a maximum frame rate of 15FPS
      b. Ports:
         1) Ethernet: 100 BaseT Ethernet.
         2) Serial: RS-485 serial interface.
      c. Data throughput: 1MBs
   2. Security: 128-bit data encryption.
   3. Range: Up to 15 miles at specified data communication rate.
   4. Frequency and licensing requirements as determined by site study and conditions.
   5. Diagnostics:
      a. Provide capability for remote diagnostics monitoring.
         1) Provide licensed copies to the Owner of any software required for remote diagnostics.
   6. Configuration:
      a. Provide remote configuration capability.
         1) Provide licensed copies to the Owner of any software required for remote configuration.
   7. Receiver sensitivity:
      a. -92 dBm at 512 Kbps with 0.000001 (10^{-6}) BER.
      b. -96 dBm at 230 Kbps with 0.000001 (10^{-6}) BER.
      c. -108 dBm at 115 Kbps with 0.000001 (10^{-6}) BER.
      d. These rates subject to confirmation by the radio engineering survey for worst case conditions to be expected at the actual site.
   8. Error detection/correction: 16 bit CRC with ARQ (Automatic Re-send Query).
   9. Temperature: -22 to +140 DegF.
   10. Humidity: 90 percent at 104 DegF noncondensing.
   11. Input power: 10.5-24 Vdc.
   12. Case: Aluminum.
   13. Agency approvals: FCC 47 CFR 15.247.

2.3 ANTENNAS, TOWERS AND MASTS

A. Design and Fabrication:
   1. All steel antenna towers and supporting structures shall be in accordance with TIA/EIA/ANSI 222-G.
   2. Type:
      a. Yagi antenna for point-to-point applications.
      b. Omnidirectional antenna for point-to-multipoint or multipoint-to-multipoint applications.
   3. Lightning protected: Mast or tower direct connected to ground.
   4. Materials:
      a. Antenna:
         1) Aluminum covered by polyurethane painted fiberglass radome.
      b. Mounting hardware:
         1) 316 stainless steel or aluminum.
      c. Towers and masts:
         1) Aluminum or Galvanized steel.
         2) Provide tower calculations showing structure is adequate for the expected wind and ice loading at the site. this will include the solar power system on the repeater panels.
   5. Frequency range: specified by manufacturer to match frequencies at which radios operate.
   6. Provide foundation(s) adequate for the tower(s) and/or mast(s) including any specified future expansion.
   7. Provide all masts, supports, lightning suppressors, and other apparatus required to make a complete and operable radio telemetry system.

2.4 TRANSMISSION CABLE AND MISCELLANEOUS

A. Acceptable Cable Manufacturers:
   1. Andrew Corp. LDF Series.
   2. Times Microwave Systems LMR Series.

B. Provide low-loss foam-dielectric type cable connecting radio antenna port(s) with the antenna.
   1. Cable: 1/2 IN or larger diameter as required to prevent signal losses in cable from degrading performance.
   2. Weatherproof, suitable for direct environmental exposure.
      a. Use "O" ring seals on connections.

C. Provide "superflexible" transmission cable (length as required) at the radio antenna port.
   1. Provide standard Type N connectors for connection to a continuous piece of cable extending to the antenna.

D. Provide antenna surge suppressor and connect to coaxial cable in cabinet housing radio.
   1. Acceptable manufacturer:
      a. Polyphaser.

E. Provide grounding connections to the antenna mast and cable in accordance with manufacturer's recommendations.

2.5 ACCESSORIES

A. Provide all accessories required to furnish a complete telemetry system to accomplish the requirements of the Drawings and Specifications.

B. Coordinate with the PLC panel designer to add your radio package to his enclosure, if desired.

C. Remote repeaters will use solar energy as a primary power unit. The solar power package will be supplied and installed as a part of the radio installation. The solar energy package shall maintain adequate storage for three days operation with 20% sun and ambient temperatures of -20 DEGF at 8 hours of data and 1hour of video throughput in a 24 hour period. Radio supplier shall supply these units complete and will mount them to the repeater tower at a bottom height of ten feet above grade.

2.6 SOURCE QUALITY CONTROL

A. Provide a performance test after factory completion and prior to shipment.
   1. Conduct a test where the RTU is operated continuously and checked for correct operation.
   2. Conduct testing with dummy I/O's to verify each control loop operation.
   3. Allow for Owner and Engineer representatives to witness testing program.
      a. Provide minimum of 15 days notice prior to testing.
   4. Do not ship prior to successful completion of this testing program.

2.7 MAINTENANCE MATERIALS

A. Furnish Owner with the following extra materials:
   1. One (1) spare radio of each type installed.

PART 3 - EXECUTION

3.1 INSTALLATION

A. Install telemetry system as shown on Drawings in accordance with manufacturer's written instruction.

B. Provide documentation verifying the data communication rate (actual throughput), signal strength and signal quality for each radio.

3.2 FIELD QUALITY CONTROL

A. Conduct startup of equipment and perform operational checks.

B. Maintain and submit an accurate daily or weekly log of all commissioning and startup functions.
   1. All commissioning/startup functions may be witnessed by the Engineer.
   2. All reports shall be signed and dated by the Contractor.

C. Provide Owner with a written statement that equipment has been installed properly, started up, and is ready for operation by Owner's personnel.

3.3 DEMONSTRATION

A. Demonstrate system in accordance with Specification Section 01650.

3.4 TRAINING

A. On-site Training:
   1. Provide employee of the manufacturer or certified representative to provide 4 HRS of operation and maintenance training at the Project site after the system has successfully undergone all field testing and acceptance procedures.
      a. As a minimum, training shall cover:
         1) Hardware overview.
         2) Software overview.
         3) Maintenance.
         4) Troubleshooting.
         5) Operation, e.g., changing set points, passwords, etc.

END OF SECTION

2014/04/01

SECTION 13448

CONTROL PANELS AND ENCLOSURES

PART 1 - GENERAL

1.1 SUMMARY

A. Section Includes:
   1. Requirements for control panels and enclosures utilized as follows:
      a. Unless noted otherwise, all control panels and enclosures housing control components that are specified in Specification Section 13442, Specification Section 13446, Specification Section 13449 or Specification Section 13500.

B. This Specification Section is only applicable to panels furnished with Division 11 equipment packages when so stated in the applicable Division 11 Specification Section.

C. This Section is only applicable to panels housing Division 16 specified equipment (e.g., motor starters, lighting controls, etc.) when so stated in the applicable Division 16 Specification Section.

D. Related Sections include but are not necessarily limited to:
   1. Division 00 - Bidding Requirements, Contract Forms, and Conditions of the Contract.
   2. Division 01 - General Requirements.
   3. Section 10400 - Identification Devices.
   4. Division 11 - Equipment.
   5. Section 13440 - Instrumentation for Process Control: Basic Requirements.
   6. Section 13442 - Primary Elements and Transmitters.
   7. Section 13446 - Control Auxiliaries.
   8. Section 13449 - Surge Protection Devices (SPD) for Instrumentation and Control Equipment.
   9. Section 13500 - Programmable Logic Controller (PLC) Control System.

1.2 QUALITY ASSURANCE

A. Referenced Standards:
   1. American National Standards Institute (ANSI).
   2. ASTM International (ASTM):
      a. B75, Standard Specification for Seamless Copper Tube.
   3. National Electrical Manufacturers Association (NEMA):
      a. 250, Enclosures for Electrical Equipment (1000 Volts Maximum).
      b. ICS 4, Industrial Control and Systems: Terminal Blocks.
   4. National Fire Protection Association (NFPA):
      a. 70, National Electrical Code (NEC):
         1) Article 409, Industrial Control Panels.
   5. Underwriters Laboratories, Inc. (UL):
      a. 508A, Standard for Safety Industrial Control Panels.

B. Miscellaneous:
   1. Approved supplier of Industrial Control Panels under provisions of UL 508A.
      a. Entire assembly shall be affixed with a UL 508A label "Listed Enclosed Industrial Control Panel" prior to shipment to the jobsite.
      b. Control panel(s) without an affixed UL 508A label shall be rejected and sent back to the Contractor’s factory.

1.3 DEFINITIONS

A. The term "panel" refers to control panels or enclosures listed in the schedule included in this Specification Section.

B. Foreign Voltages: Voltages that may be present in circuits when the panel main power is disconnected.

C. Intrinsically Safe:
   1. A device, instrument or component that will not produce sparks or thermal effects under normal or abnormal conditions that will ignite a specified gas mixture.
   2. Designed such that electrical and thermal energy limits inherently are at levels incapable of causing ignition.

D. Cable: Multi-conductor, insulated, with outer sheath containing either building wire or instrumentation wire.

E. Instrumentation Cable:
   1. Multiple conductor, insulated, twisted or untwisted, with outer sheath.
   2. Instrumentation cable is typically either TSP (twisted-shielded pair) or TST (twisted-shielded triad), and is used for the transmission of low current or low voltage signals.

F. Ground Fault Circuit Interrupter (GFCI): A type of device (e.g., circuit breaker or receptacle) which detects an abnormal current flow to ground and opens the circuit preventing a hazardous situation.

G. Programmable Logic Controller (PLC): A specialized industrial computer using programmed, custom instructions to provide automated monitoring and control functions by interfacing software control strategies to input/output devices.

H. Remote Terminal Unit (RTU): An industrial data collection device designed for location at a remote site, that communicates data to a host system by using telemetry such as radio, dial-up telephone, or leased lines.

I. Input/Output (I/O): Hardware for the moving of control signals into and/or out of a PLC or RTU.

J. Supervisory Control and Data Acquisition (SCADA): Used in process control applications, where programmable logic controllers (PLCs) perform control functions but are monitored and supervised by computer workstations.

K. Highway Addressable Remote Transducer (HART): An open, master-slave protocol for bus addressable field instruments.

L. Digital Signal Cable: Used for the transmission of digital communication signals between computers, PLCs, RTUs, etc.

M. Uninterruptible Power Supply (UPS): A backup power unit that provides continuous power when the normal power supply is interrupted.

N. Loop Calibrator: Portable testing and measurement tool capable of accurately generating and measuring 4-20ma DC analog signals.

1.4 SUBMITTALS

A. Shop Drawings:
   1. See Specification Section 01340 for requirements for the mechanics and administration of the submittal process.
   2. See Specification Section 13440.
   3. Prepared with computer aided design (CAD) software.
   4. Printed on 11 by 17 IN sheets.
   5. Drawings shall include a title block containing the following:
      a. Plant or facility name where panel(s) are to be installed.

b. Drawing title.
c. Drawing number.
d. Revision list with revision number and date.
e. Drawing date.
f. Drawing scale.
g. Manufacturer name, address, and telephone number.

6. Cover sheet for each drawing set shall indicate the following:
   a. Plant or facility name.
   b. Project name.
   c. Submittal description.
   d. Revision number.
   e. Issue date.
7. Table of contents sheet(s) shall indicate the following for each drawing in the set:
   a. Drawing number.
   b. Drawing title.
   c. Sheet number.
8. Legend and abbreviation sheet shall indicate the following:
   a. Description of symbols and abbreviations used.
   b. Panel construction notes including enclosure NEMA rating, finish type and color, wire type, wire color strategy, conductor sizes, and wire labeling strategy.
   c. Confirmation that the panel(s) are to be affixed with a UL 508A label prior to shipment from the factory.
9. Bill of Material for each panel shall include the following component information:
   a. Instrument tag number.
   b. Quantity.
   c. Functional name or description.
   d. Manufacturer.
   e. Complete model number.
   f. Size or rating.
10. Panel exterior layout drawings to scale and shall indicate the following:
    a. Panel materials of construction, dimensions, and total assembled weight.
    b. Panel access openings.
    c. Conduit access locations.
    d. Front panel device layout.
    e. Nameplate schedule:
       1) Nameplate location.
       2) Legend which indicates text, letter height and color, and background color.
    f. Alarm annunciator window engraving schedule.
    g. Layouts of graphic panels or mosaic displays.
11. Panel interior layout drawings shall be drawn to scale and shall indicate the following:
    a. Sub-panel or mounting pan dimensions.
    b. Interior device layouts.
    c. PLC/RTU general arrangement layouts.
    d. Wire-way locations, purpose, and dimensions.
    e. Terminal strip designations.
    f. Location of external wiring and/or piping connections.
    g. Location of lighting fixtures, switches and receptacles.
12. Wiring diagrams shall consist of the following:
    a. Panel power distribution diagrams.
    b. Control and instrumentation wiring diagrams.
    c. PLC/RTU I/O information:
       1) Model number of I/O module.
       2) Description of I/O module type and function.
       3) Rack and slot number.
       4) Terminal number on module.
       5) Point or channel number.

6) Programmed point addresses.
7) Signal function and type.

d. Wiring diagrams shall identify each wire as it is to be labeled.

B. Manufacturer catalog cut sheets for enclosure, finish, panel devices, control auxiliaries, and accessories.

C. Climate control calculations for each panel.
1. Verify that sufficient dissipation and/or generation of heat is provided to maintain interior panel temperatures within the rated operating temperatures of panel components.

D. Operation and Maintenance Manuals:
1. See Specification Section 01342 for requirements for:
a. The mechanics and administration of the submittal process.
b. The content of Operation and Maintenance Manuals.
2. See Specification Section 13440.

E. Informational Submittals:
1. Record Drawings:
a. Updated panel drawings delivered with the panel(s) from the Contractor's factory.
b. Drawings shall be enclosed in transparent plastic and firmly secured within each panel.

PART 2 - PRODUCTS

2.1 ACCEPTABLE MANUFACTURERS

A. Subject to compliance with the Contract Documents, the following manufacturers are acceptable:
1. Enclosures:
a. Hoffman Engineering Co.
b. Rittal.
c. Hammond Manufacturing.
d. Millbank Mfg. Co.
2. Panel heaters:
a. Hoffman Enclosures, Inc.
b. Rittal.
c. Hammond Manufacturing.
3. Heat exchangers and air conditioners:
a. Hoffman Enclosures, Inc.
b. Rittal.
c. Hammond Manufacturing.
4. Cooling fans and exhaust packages:
a. Hoffman Enclosures, Inc.
b. Rittal.
5. Internal corrosion inhibitors:
a. Hoffman Enclosures, Inc.; Model A-HCI.
b. Northern Technologies International Corporation (NTIC); Model Zerust VC.
c. Cortec Corporation; Model VpCl Emitting Systems.

B. Submit request for substitution in accordance with Specification Section 01640.

2.2 ACCESSORIES

A. Panel Nameplates and Identification: See Section 10400.

2.3 FABRICATION

A. General:
   1. Fabricate panels with instrument arrangements and dimensions identified in the Contract Documents.
   2. Provide panel(s) with the required enclosure rating per NEMA 250 to meet classifications identified in the Contract Documents.
   3. Devices installed in panel openings shall have a NEMA enclosure rating at least equal to the panel enclosure rating.
      a. Devices that cannot be obtained with an adequate NEMA rating shall be installed behind a transparent viewing window.
      b. The window shall maintain the required NEMA rating of the enclosure.
   4. Panel(s) shall be completely assembled at the Contractor's factory.
      a. No fabrication other than correction of minor defects or minor transit damage shall be performed on panels at the jobsite.
   5. Painting:
      a. Panels fabricated from steel shall have their internal and external surfaces prepared, cleaned, primed, and painted.
         1) Mechanically abrade all surfaces to remove rust, scale, and surface imperfections.
         2) Provide final surface treatment with 120 grit abrasives or finer, followed by spot putty to fill all voids.
         3) Utilize solvent or chemical methods to clean panel surfaces.
         4) Apply surface conversion of zinc phosphate prior to painting to improve paint adhesion and to increase corrosion resistance.
         5) Electrostatically apply polyester urethane powder coating to all inside and outside surfaces.
         6) Bake powder coating at high temperatures to bond coating to enclosure surface.
            a) Panel interior shall be white with semi-gloss finish.
            b) Panel exterior shall be ANSI #61 gray with flat finish.
         7) Application of alkyd liquid enamel coating shall be allowed in lieu of polyester urethane powder for wall mounted NEMA 1 or NEMA 12 rated panels.
      b. Panels fabricated from stainless steel, aluminum, or fiberglass shall not be painted.
   6. Finish opening edges of panel cutouts to smooth and true surface conditions.
      a. Panels fabricated from steel shall have the opening edges finished with the panel exterior paint.
   7. Panel shall meet all requirements of UL 508A.
      a. If more than one (1) disconnect switch is required to disconnect all power within a panel or enclosure, provide a cautionary marking with the word "CAUTION" and the following or equivalent, "Risk of Electric Shock-More than one (1) disconnect switch required to de-energize the equipment before servicing."
   8. Provide control panel in accordance with NFPA 70, Article 409.
      a. In the event of any conflict between NFPA 70, Article 409 and UL 508A, the more stringent requirement shall apply.

B. Free-Standing Panels:
   1. Welded construction.
   2. Completely enclosed, self-supporting, and gasketed dusttight.
   3. Rolled lip around all sides of enclosure door opening.
   4. Seams and corners welded and ground smooth to touch and smooth in visual appearance.
   5. Full height, fully gasketed flush pan doors.
   6. Full length piano hinges rated for 1.5 times door plus instrument weight.
   7. Doors with keyed alike locking handles and three-point catch.
   8. Appropriate conduit, wiring, and instrument openings shall be provided.
   9. Lifting eyebolts to allow simple, safe rigging and lifting of panel during installation.

C. Wall Mounted Panels:
   1. Seams continuously welded and ground smooth.

2. Rolled lip around all sides of enclosure door opening.
3. Gasketed dust tight.
4. Door clamps and hasp/staple for padlocking.
5. Key doors alike.
6. Continuous heavy GA hinge pin on doors.
    a. Hinges rated for 1.5 times door plus instrument weight.
7. Front full opening door.
8. Brackets for wall mounting.

D. Internal Panel Wiring:
1. Panel wire duct shall be installed between each row of components, and adjacent to each terminal strip.
    a. Route wiring within the panel in wire-duct neatly tied and bundled with tie wraps.
    b. Follow wire-duct manufacturer's recommended fill limits.
    c. Wire-duct shall have removable snap-on covers and perforated walls for easy wire entrance.
    d. Wire-duct shall be constructed of nonmetallic materials with rating in excess of the maximum voltage carried therein.
2. Wiring shall be installed such that if wires are removed from one (1) device, source of power will not be disrupted to other devices.
3. Splicing and tapping of wires permitted only at terminal blocks.
4. Wire bunches to doors shall be secured at each end so that bending or twisting will be around longitudinal axis of wire.
    a. Protect bend area with sleeve.
5. Arrange wiring neatly, cut to proper length, with surplus wire removed.
    a. Arrange wiring with sufficient clearance.
    b. Provide abrasion protection for wire bundles that pass through openings or across edges of sheet metal.
6. AC circuits shall be routed separate from analog signal cables and digital signal cables.
    a. Separate by at least 6 IN, except at unavoidable crossover points and at device terminations.
7. Provide at least 6 IN of separation between intrinsically safe devices and circuits and non-intrinsically safe devices and circuits.
8. Wiring to pilot devices or rotary switches shall be individually bundled and installed with a "flexible loop" of sufficient length to permit the component to be removed from panel for maintenance without removing terminations.
9. Conductors for AC and DC circuits shall be type MTW stranded copper listed for operation with 600 V at 90 DegC.
    a. Conductor size shall be as required for load and 16 AWG minimum.
    b. Internal panel wiring color code:
        1) AC circuits:
            a) Power wiring: Black.
            b) Control interconnections: Yellow.
            c) Neutral: White.
            d) Ground: Green.
        2) Low voltage DC circuits:
            a) Power wiring: Blue.
            b) Control interconnections: Violet.
        3) Foreign voltage circuits: Pink.
        4) Annunciator circuits: Red.
        5) Intrinsically safe circuits: Orange.
10. Analog signal cables shall be of 600 V insulation, stranded copper, twisted-shielded pairs.
    a. Conductor size: 18 AWG minimum.
    b. Terminate shield drain conductors to ground only at one (1) end of the cable.

11. High precision 250 ohm resistors with 0.25 percent accuracy shall be used where 4-20 mA DC analog signals are converted to 1-5 Vdc signals.
    a. Resistors located at terminal strips.
    b. Resistors terminated using individual terminal blocks and with no other conductors.
    c. Resistor leads shall be un-insulated and of sufficient length to allow test or calibration equipment (e.g., HART communicator, loop calibrator) to be properly attached to the circuit with clamped test leads.
12. Analog signals for devices in separate enclosures shall not be wired in series.
    a. Loop isolators shall be used where analog signals are transmitted between control enclosures.
13. Wire and cable identification:
    a. Wire and cables numbered and tagged at each termination.
    b. Wire tags:
        1) Slip-on, PVC wire sleeves with legible, machine-printed markings.
        2) Adhesive, snap-on, or adhesive type labels are not acceptable.
    c. Markings as identified in the Shop Drawings.

E. Grounding Requirements:
1. Equipment grounding conductors shall be separated from incoming power conductors at the point of entry.
2. Minimize grounding conductor length within the enclosure by locating the ground reference point as close as practical to the incoming power point of entry.
3. Bond electrical racks, chassis and machine elements to a central ground bus.
    a. Nonconductive materials, such as paint, shall be removed from the area where the equipment contacts the enclosure.
4. Bond the enclosure to the ground bus.
    a. It is imperative that good electrical connections are made at the point of contact between the ground bus and enclosure.
5. Panel-mounted devices shall be bonded to the panel enclosure or the panel grounding system by means of locknuts or pressure mounting methods.
6. Sub-panels and doors shall be bonded to ground.

F. Termination Requirements:
1. Wiring to circuits external to the panel connected to interposing terminal blocks.
2. Terminal blocks rigidly mounted on DIN rail mounting channels.
3. Terminal strips located to provide adequate space for entrance and termination of the field conductors.
4. One (1) side of each strip of terminal blocks reserved exclusively for the termination of field conductors.
5. Terminal block markings:
    a. Marking shall be the same as associated wire marking.
    b. Legible, machine-printed markings.
    c. Markings as identified in the shop drawings.
6. Terminal block mechanical characteristics, and electrical characteristics shall be in accordance with NEMA ICS 4.
7. Terminal blocks with continuous marking strips.
    a. Each terminal block shall be identified with machine printed labels.
8. Terminals shall facilitate wire sizes as follows:
    a. 120 Vac applications: Conductor size 12 AWG minimum.
    b. Other: Conductor size 14 AWG minimum..
9. Analog signal cable shield drain conductors shall be individually terminated.
10. Install minimum of 20 percent spare terminals.
11. Bladed, knife switch, isolating type terminal blocks where control voltages enter or leave the panel.
12. Fused terminal blocks shall be used in the following circuits:
    a. Control voltage is used to energize a solenoid valve.
    b. DC power is connected to 2-wire, loop-powered instruments.

13. Fused terminal blocks shall be provided with blown fuse indicators.
14. When control circuits require more than one (1) field conductor connected to a single wiring point, a sufficient number of terminal points shall be connected internally to allow termination of only one (1) field conductor per terminal block.
15. DIN rail mounting channels shall be installed along full length of the terminal strip areas to facilitate future expansion.
16. Connections to devices with screw type terminals shall be made using spade-tongue, insulated, compression terminators.

G. Component Mounting and Placement:
1. Components shall be installed per manufacturer instructions.
2. Control relays and other control auxiliaries shall be mounted on DIN rail mounting channels where practical.
3. Front panel devices shall be mounted within a range of 40 to 70 IN above the finished floor, unless otherwise shown in the Contract Documents.
4. PLC/RTU and I/O rack installation:
   a. Located such that the LED indicators and switches are readily visible with the panel door open.
   b. Located such that repair and/or replacement of component can be accomplished without the need to remove wire terminations or other installed components.
5. Locate power supplies with sufficient spacing for circulation of air.
6. Where components such as magnetic starters, contactors, relays, and other electromagnetic devices are installed within the same enclosure as the PLC/RTU system components, provide a barrier of at least 6 IN of separation between the “power area containing the electromagnetic devices” and the “control area”.
7. Components mounted in the panel interior shall be fastened to an interior sub-panel using machine screws.
   a. Fastening devices shall not project through the outer surface of the panel enclosure.
8. Excess mounting space of at least 20 percent for component types listed below to facilitate future expansion:
   a. Fuse holders.
   b. Circuit breakers.
   c. Control relays.
   d. Time delay relays.
   e. Intrinsically safe barriers and relays.
9. Components installed on sub-panels shall be provides with a minimum spacing between component and wire duct of 1 IN.
   a. Minimum of 2 IN separation between terminal strips and wire ducts.
10. Pneumatic tubes and appurtenances:
   a. Connect panel air piping and tubing penetrations with bulkhead fittings.
   b. Pneumatic control tubing shall be 1/4 IN OD.
      1) Tubing material: Either soft annealed ASTM B75 copper or flame-resistant polyethylene.
   c. Main headers within panels shall be minimum 1 IN.
   d. Compression-type pressure fittings.
   e. Equip panel instrument leads with ball type isolation valve.
   f. Route tubing neatly and mount securely.
   g. Do not route tubing in front of or in wire ducting.
   h. Code terminal plates.
   i. Pneumatic devices shall be served by a dual function filter regulator.

H. Power Distribution:
1. Main incoming power circuits shall be protected with a thermal magnetic circuit breaker.
   a. Limit load to maximum of 80 percent of circuit breaker rating.
2. Component types listed below shall be individually fused so that they may be individually de-energized for maintenance:
   a. PLC/RTU power supply modules.

b. Single-loop controllers.
c. Recorders.
d. Alarm annunciators.

3. Each control panel with PLC/RTU components shall be furnished with power protection in the form of a double conversion UPS.
4. Equip each panel with necessary power supplies with ratings required for installed equipment and with minimum 25 percent spare capacity.
5. Constant voltage transformers, balancing potentiometers, and rectifiers as necessary for specific instrument requirements.

I. Internal Panel Lighting and Service Receptacles:
1. Panels less than or equal to 4 FT wide:
a. One (1) electrical GFCI duplex receptacle.
b. One (1) compact fluorescent light fixture with manual switch(es).
2. Panels or panel faces greater than 4 FT wide:
a. One (1) duplex electrical GFCI receptacle per 6 FT of length.
b. Continuous fluorescent lighting strip with manual switches.

J. Environmental Controls:
1. Indoor panels located in a designated electrical room or control room:
a. Thermostat controlled cooling fans with exhaust louvers if required to maintain temperature inside panel(s) below the maximum operating temperature rating of the internal components.
b. Internal corrosion inhibitors.
2. Indoor panels not located within a designated electrical room or control room:
a. Thermostat controlled heaters to maintain temperature approximately 10 DegF above ambient for condensation prevention inside the panels.
b. Automatically controlled, closed-loop heat exchangers or closed-loop air conditioners where required to maintain temperature inside each enclosure below the maximum operating temperature rating of the components inside the panel(s).
c. Internal corrosion inhibitors.
3. Outdoor panels:
a. Outdoor temperature range of 0 DegF through 120 DegF.
b. Thermostat controlled heaters to maintain temperature approximately 10 DegF above ambient for condensation prevention inside the panels.
c. Outdoor temperature range of 0 DegF through 120 DegF.
d. Thermostat controlled closed-loop heat exchangers or closed-loop air conditioners if required to maintain temperature inside each enclosure below the maximum operating temperature rating of the components inside the panel.
e. Internal corrosion inhibitors.
4. Environmental control components:
a. Panel heaters:
1) Thermostat controlled.
2) Fan driven.
3) Components mounted in an anodized aluminum housing.
4) Designed for sub-panel mounting.
5) Powered from 120 Vac and protected with a dedicated circuit breaker.
b. Cooling fans and exhaust packages:
1) Cooling fan with louver or grill and replaceable filter.
2) Designed to be mounted within a panel cutout to provide positive airflow through the panel.
3) Cooling fan and exhaust louvers shall be designed and listed to maintain a NEMA 12 enclosure rating.
4) Fitted with replaceable, high-density foam or synthetic fiber.
5) Cooling fan controlled with a separately mounted thermostat with bi-metal sensor and adjustable dial for temperature setting.
6) Powered from 120 Vac and protected with a dedicated circuit breaker.

c. Heat exchangers and air conditioners:
   1) Dual-loop design to isolate panel interior air from exterior air.
   2) Thermostat controlled.
   3) Operate from 120 Vac and protected with a dedicated circuit breaker.
d. Internal corrosion inhibitors:
   1) Contains chemical which vaporizes and condenses on surfaces in the enclosure.
   2) Inhibitor shall be applied in accordance with manufacturer instructions for the enclosure volume.
   3) Inhibitor shall be applied in the panel(s) prior to shipment from the Contractor's factory.

2.4 MAINTENANCE MATERIALS

A. Extra Materials:
   1. One (1) complete set of replacement corrosion inhibitors in sealed packages for each panel.

PART 3 - EXECUTION

3.1 FACTORY TESTING

A. Scope: Inspect and test entire panel assembly to verify readiness for shipment.

B. Location: Contractor's factory.

C. Factory Tests:
   1. Tests shall be fully documented and signed by the Contractor's factory supervisor.
   2. The panel shop shall fully test the control panel for correct wiring.
      a. Each I/O point shall be checked by measuring or connecting circuits at the field terminal blocks.
   3. Burn-in test: Panel(s) shall be fully energized for a minimum period of 48 HRS.
   4. A PLC Central Processing Unit (CPU) shall be obtained and connected to the panel(s) if necessary for testing purposes.
   5. Testing equipment (such as digital multi-meters, analog loop calibrators, and laptop computers with PLC programming software) shall be used as required for testing.
   6. The following functions shall be tested as a minimum:
      a. Demonstrate functions of the panel(s) required by the Contract Documents.
      b. Correctness of wiring from all panel field terminals to all I/O points and to all panel components.
      c. Simulate and test each discrete signal at the field terminal strips.
      d. Simulate and test each analog signal using loop calibrators.
      e. Correct operation of communications between PLC system Central Processing Units (CPUs) and Remote I/O bases.
      f. Correct operation of single-loop controllers (including digital communication to microprocessor based devices).
      g. Correct operation of all digital communication devices.
      h. Demonstrate online and offline diagnostic tests and procedures.
      i. The Contractor shall notify the Engineer in writing a minimum of 15 calendar days prior to the Factory Tests.
         1) Engineer has the option to witness all required tests.
   7. Make following documentation available to the Engineer at test site during the tests:
      a. Contract Documents.
      b. Factory Demonstration Testing procedures.
      c. List of equipment to be testing including make, model, and serial number.
      d. Shop Drawing submittal data for equipment being tested.
   8. Deficiencies shall be corrected prior to shipment from the Contractor's factory.

3.2 INSTALLATION

A. Install free-standing panels on 4 IN high concrete housekeeping pads.

B. Anchor panels in a manner to prevent the enclosure from racking, which may cause the access doors to become misaligned.

C. Obtain approved panel layouts prior to installation of conduits.

D. Install products in accordance with manufacturer's instructions.

3.3 SCHEDULE

A. Schedule:

TAG NUMBER	LOCATION	TYPE	MATERIAL	LATCH
CP-101	Hoodoo Gulch	RTU	SS	3-pt Latch
CP-102	Hoodoo Gulch	Pump Control	SS	3-pt Latch
CP-301	Sunday Pit	RTU	SS	3-pt Latch
CP-401	Strawberry Pit	RTU	SS	3-pt latch

END OF SECTION

2014/04/01

SECTION 13449

SURGE PROTECTION DEVICES (SPD) FOR INSTRUMENTATION AND CONTROL EQUIPMENT

PART 1 - GENERAL

1.1 SUMMARY

A. Section Includes:
   1. Type IC1 SPD - Dedicated 120 Vac circuit, series connection, control panel mounted.
   2. Type IC2 SPD - Individual equipment plug-in device (point of use protection).
   3. Type IC3 SPD - Discrete 120 Vac control signal, control panel mounted.
   4. Type IC4 SPD - Analog instrumentation signal, field mounted.
   5. Type IC5 SPD - Analog instrumentation signal, control panel mounted.
   6. Type IC6 SPD - Combination 120 Vac circuit and analog signal, field mounted.
   7. Type IC7 SPD - Discrete low voltage control signal, control panel mounted.

B. Related Sections include but are not necessarily limited to:
   1. Division 00 - Bidding Requirements, Contract Forms, and Conditions of the Contract.
   2. Division 01 - General Requirements.
   3. Section 13440 - Instrumentation for Process Control: Basic Requirements.

1.2 QUALITY ASSURANCE

A. Referenced Standards:
   1. Institute of Electrical and Electronics Engineers, Inc. (IEEE):
      a. C62.41, Recommended Practice for Surge Voltages in Low-Voltage AC Power Circuits.
   2. National Electrical Manufacturers Association (NEMA):
      a. 250, Enclosures for Electrical Equipment (1000 Volts Maximum).
      b. LS 1, Low Voltage Surge Protection Devices.
   3. Underwriters Laboratories, Inc. (UL):
      a. 497B, Standard for Safety Protectors for Data Communications and Fire-Alarm Circuits.
      b. 1283, Standard for Safety Electromagnetic Interference Filters.
      c. 1363, Standard for Safety Relocatable Power Taps.
      d. 1449, Standard for Safety Transient Voltage Surge Suppressors.

B. Qualifications:
   1. Provide devices for a manufacturer who has been regularly engaged in the development, design, testing, listing and manufacturing of SPDs of the types and ratings required for a period of 10 years or more and whose products have been in satisfactory use in similar service.
   2. Upon request, suppliers or manufacturers shall provide a list of not less than three (3) customer references showing satisfactory operation.

1.3 DEFINITIONS

A. Clamping Voltage: The voltage measured at the end of the 6 IN output leads of the SPD and from the zero voltage reference to the peak of the surge when the applied surge is induced at the 90 degree phase angle of the applied system frequency voltage.

B. Let-Through Voltage: The voltage measured at the end of the 6 IN output leads of the SPD and from the system peak voltage to the peak of the surge when the applied surge is induced at the 90 degree phase angle of the applied system frequency voltage.

C. Maximum Continuous Operating Voltage (MCOV): The maximum steady state voltage at which the SPD device can operate and meet it specification within its rated temperature.

D. Maximum Surge Current:
   1. The maximum 8 x 20 microsecond surge current pulse the SPD device is capable of surviving on a single-impulse basis without suffering either performance degradation or more than 10 percent deviation of clamping voltage at a specified surge current.
   2. Listed by mode, since number and type of components in any SPD may vary by mode.

E. Protection Modes: This parameter identifies the modes for which the SPD has directly connected protection elements, i.e., line-to-neutral (L-N), line-to-line (L-L), line-to-ground (L-G), neutral-to-ground (N-G).

F. Surge Current per Phase:
   1. The per phase rating is the total surge current capacity connected to a given phase conductor.
   2. For example, a wye system surge current per phase would equal L-N plus L-G; a delta system surge current per phase would equal L-L plus L-G.
      a. The N-G mode is not included in the per phase calculation.

G. System Peak Voltage: The electrical equipment supply voltage sine wave peak (i.e., for a 120 V system the L-N peak voltage is 170 V).

1.4 SUBMITTALS

A. Shop Drawings:
   1. See Specification Section 01340 for requirements for the mechanics and administration of the submittal process.
   2. For named products, submit only a catalog cut sheet.
      a. For all other products, submit the data required below.
   3. See Specification Section 13440.
   4. Product technical data for non-specified models:
      a. Manufacturer's experience.
      b. Standard catalog cut sheet.
      c. Electrical and mechanical drawing showing unit dimensions, weights, mounting provisions, connection details and layout diagram of the unit.
      d. Create a Product Data Sheet for each different model number of SPD provided.
         1) Data in the Product Data Sheet heading:
            a) SPD Type per PART 2 of the Specification.
            b) Manufacturer's Name.
            c) Product model number.
         2) Data in the Product Data Sheet body:
            a) Column one: Specified value/feature of every paragraph of PART 2 of the Specification.
            b) Column two: Manufacturer's certified value confirming the product meets the specified value/feature.
         3) Data in the Product Data Sheet closing:
            a) Signature of the manufacturer's official (printed and signed).
            b) Title of the official.
            c) Date of signature.

B. Operation and Maintenance Manuals:
   1. See Specification Section 01342 for requirements for:
      a. The mechanics and administration of the submittal process.
      b. The content of Operation and Maintenance Manuals.

1.5 WARRANTY

A. The manufacturer shall provide a minimum of a five (5) year Limited Warranty from date of shipment against failure when installed in compliance with applicable national/local electrical codes and the manufacturer's installation, operation and maintenance instructions.

PART 2 - PRODUCTS

2.1 ACCEPTABLE MANUFACTURERS

A. Subject to compliance with the Contract Documents, the manufacturers model numbers listed in the individual product paragraphs below are acceptable.

2.2 TYPE IC1 SPD

A. Approved Products:
   1. Eaton AGSHW CH-120N-15-XS.
   2. EDCO HSP121BT-1RU.
   3. MTL MA15/D/1/SI.
   4. Phoenix Contact SFP 1-20/120AC (2856702).

B. Standards: UL 1449.

C. Design:
   1. General:
      a. Mounted internally to control panels for point-of-use loads.
      b. MOV based or multi-stage hybrid solid state high performance suppression system.
      c. Designed for series connection.
      d. Enclosure: Metallic or plastic, flange or DIN rail mounting.
      e. Field connection: Provide unit with external terminal screws for each phase, neutral and ground that will accept #14 through #12 conductors.
      f. Device monitoring: Long-life, solid state, externally visible indicators that monitors the on-line status of the units suppression filter system or power loss in any of the phases.
   2. Operating voltage: 120 Vac.
   3. Operating current: 15 A minimum.
   4. Operating frequency: 45 to 65 Hz.
   5. Modes of protection: All modes, L-N, L-G and N-G.
   6. Maximum continuous operating voltage: Less than 130 percent of system peak voltage.
   7. Maximum surge current: 20,000A per phase, 10,000A per mode minimum.
   8. Minimum repetitive surge current capacity: 1000 impulses with no degradation of more than 10 percent deviation of the clamping voltage.
   9. Fusing: Optional integral unit level and/or component level short circuit and/or thermal overload protection.
      a. External protection as recommended by manufacturer.
   10. Maximum clamping voltages, dynamic test with voltages measured from the zero voltage reference and 90 degree phase angle:

		IEEE C62.41		
System Voltage	**Test Mode**	**B Comb. Wave**	**A Ring Wave**	**UL 1449**
L-N = 120 V	L-N	400 V	300 V	330 V
	L-G	500 V	400 V	400 V
	N-G	500 V	400 V	400 V

2.3 TYPE IC2 SPD

A. Approved Product:

1. MTL Zone Guardian ZG-43006.
2. Tripp Lite Isobar 6 Ultra.

B. Standards: UL 1283, UL 1363 and UL 1449.

C. Design:
1. General:
a. Multi-stage hybrid solid state high performance suppression system.
b. Point of use protection, designed for plug-in devices.
c. Enclosure: Metallic or impact resistant plastic.
d. Field connection:
1) The minimum line cord shall be #14 three (3) conductors, 6 FT in length, with a single piece strain relief NEMA 5-15P plug.
2) The minimum plug-in strip shall have six (6) single NEMA 5-15R receptacles.
e. ON/OFF toggle switch.
f. Device monitoring:
1) Long-life, solid state, externally visible indicators that monitor the on-line status of the units suppression filter system or power loss in any of the phases.
2) A fuse or circuit breaker status only monitor system is not acceptable.
2. Operating voltage: 120 Vac.
3. Modes of protection: All modes, L-N, L-G and N-G.
4. Maximum continuous operating voltage: Less than 130 percent of system peak voltage.
5. Operating frequency: 45 to 65 Hz.
6. Maximum surge current: 20,000 A per phase, 10,000A per mode minimum.
7. Minimum repetitive surge current capacity: 1000 impulses with no degradation of more than 10 percent deviation of the clamping voltage.
8. Overcurrent protection: The SPD may contain internal fuses or circuit breaker, but an IEEE B3 combination wave shall not cause the fuse or circuit breaker to open and render the SPD inoperable.
9. Maximum clamping voltages, dynamic test with voltages measured from the zero voltage reference and 90 degree phase angle:

		IEEE C62.41		
System Voltage	**Test Mode**	**B Comb. Wave**	**A Ring Wave**	**UL 1449**
L-N = 120 V	L-N	400 V	300 V	330 V
	L-G	500 V	400 V	400 V
	N-G	500 V	400 V	400 V

10. EMI-RFI noise rejection: Attenuation greater than 30 dB for frequencies between 100 kHz and 100 MHz.

2.4 TYPE IC3 SPD

A. Approved Products:
1. EDCO DRS-130RMS.
2. MTL MA-15/D/1/SI.
3. MTL SD-150X.
4. Phoenix Contact PT 2x1VA-120AC-ST (2839185) with PT BE/FM (2839282) base for non-isolated wiring.
5. Phoenix Contact PT-2 PE/S-120 AC-ST (2839334 with PT-BE/FM (2839282) base for isolated wiring.

B. Standards: UL 497B or UL 1449.

C. Design:
1. General:
a. Mounted internally to control panels for point-of-use loads.
b. Multi-stage hybrid solid state high performance suppression system.

c. Designed for series connection.
d. Enclosure: Metallic or plastic, flange or DIN rail mounting.
e. Field connection: Provide unit with external terminal screws for each phase, neutral and ground that will accept #14 through #12 conductors.
f. Device monitoring: Long-life, solid state, externally visible indicators that monitors the on-line status of the units suppression filter system or power loss in any of the phases.

2. Operating voltage: 120 Vac.
3. Operating current: 3 A minimum.
4. Operating frequency: 45 to 65 Hz.
5. Modes of protection: L-N; when ground conductor is present L-G and N-G.
6. Maximum continuous operating voltage: Less than 130 percent of system peak voltage.
7. Maximum surge current: 6000 A per phase, 3000A per mode minimum.
8. Minimum repetitive surge current capacity:
   a. The SPD shall meet one (1) of the following:
      1) 1000 occurrences of a 200A, 10x1000 microsecond waveform.
      2) 400 occurrences of a 500A, 10x1000 microsecond waveform.
      3) 100 occurrences of a 400A, 10x700 microsecond waveform.
      4) 100 occurrences of a 2000A, 8x20 microsecond waveform.
9. Maximum clamping voltages, measured from the zero voltage reference:
   a. The SPD shall meet one (1) of the following:
      1) 400A, 10x700 microsecond waveform: 200 percent of system voltage.
      2) IEEE B3 combination wave: 250 percent of system voltage.
      3) IEEE B3 ring wave: 200 percent of system peak voltage.
      4) IEEE A3 ring wave: 200 percent of system peak voltage.
      5) Mode N-G clamping voltage may be 175 percent higher than the L-G levels.

2.5 TYPE IC4 SPD

A. Approved Products:
1. Eaton DPIPE S0362.
2. EDCO SS64-036-1, SS64-036-2, SS65-036-1 or SS65-036-2.
3. MTL TP48-NDI.
4. Phoenix Contact S-PT1-2PE-24DC (2818122).

B. Standards: None.

C. Design:
1. General:
   a. For protection of field mounted equipment connected to 4-20mA analog signal loops.
   b. Mounted directly to an unused conduit entry on a process transmitter housing.
   c. Multi-stage hybrid solid state high performance suppression system.
   d. Designed for series connection.
   e. Enclosure: 1/2 IN to 3/4 IN stainless steel conduit pipe nipple.
2. Operating voltage: 24 Vdc or as indicated on the Drawings.
3. Modes of protection: All modes, L-L and L-G.
4. Maximum continuous operating voltage: Less than 130 percent of system peak voltage.
5. Maximum surge current: 10,000 A.
6. Minimum repetitive surge current capacity:
   a. The SPD shall meet one (1) of the following:
      1) 1000 occurrences of a 200A, 10x1000 microsecond waveform.
      2) 400 occurrences of a 500A, 10x1000 microsecond waveform.
      3) 100 occurrences of a 400A, 10x700 microsecond waveform.
      4) 100 occurrences of a 2000A, 8x20 microsecond waveform.
      5) 10 occurrences of a 10,000A, 8x20 microsecond waveform.
7. Maximum clamping voltages, L-L:
   a. The SPD shall meet one (1) of the following:
      1) 400A, 10x700 microsecond waveform: 400 percent of system voltage.

2) 10,000A, 8x20 microsecond waveform: 400 percent of system voltage.
3) IEEE B3 combination wave: 250 percent of system voltage.

8. Maximum clamping voltages, L-G:
   a. The SPD shall meet one (1) of the following:
      1) 400A, 10x700 microsecond waveform: 200 percent of system voltage.
      2) 10,000A, 8x20 microsecond waveform: 200 percent of system voltage.
      3) IEEE B3 combination wave: 300 percent of system voltage.

2.6 TYPE IC5 SPD

A. Approved Products:
   1. Eaton DHW2P036.
   2. EDCO DRS-036 or PC642C-036 with PCB1B base.
   3. MTL SD32 or SD32X.
   4. Phoenix Contact PT 2x2-24DC-ST (2838228) with PT 2x2-BE (2838208) or PT 2x2+F-BE (2839224) base.

B. Standards: UL 497B.

C. Design:
   1. General:
      a. Mounted internally to control panels for protection of equipment connected to analog signal loops.
      b. Multi-stage hybrid solid state high performance suppression system.
      c. Designed for series connection.
      d. Enclosure: Metallic or plastic, flange or DIN rail mounting.
      e. Field connection: The unit shall have external terminal screws for line and ground conductors.
   2. Operating voltage: 24 Vdc or as indicated on the Drawings.
   3. Modes of protection: All modes, L-L and L-G.
   4. Maximum continuous operating voltage: Less than 130 percent of system peak voltage.
   5. Maximum surge current: 10,000 A.
   6. Minimum repetitive surge current capacity:
      a. The SPD shall meet one (1) of the following:
         1) 1000 occurrences of a 200A, 10 x 1000 microsecond waveform.
         2) 400 occurrences of a 500A, 10 x 1000 microsecond waveform.
         3) 100 occurrences of a 400A, 10 x 700 microsecond waveform.
         4) 100 occurrences of a 2000A, 8 x 20 microsecond waveform.
         5) 10 occurrences of a 10,000A, 8 x 20 microsecond waveform.
   7. Maximum clamping voltages, L-L:
      a. The SPD shall meet one (1) of the following:
         1) 400A, 10x700 microsecond waveform: 400 percent of system voltage.
         2) 10,000A, 8x20 microsecond waveform: 400 percent of system voltage.
         3) IEEE B3 combination wave: 225 percent of system voltage.
   8. Maximum clamping voltages, L-G:
      a. The SPD shall meet one (1) of the following:
         1) 400A, 10x700 microsecond waveform: 200 percent of system voltage.
         2) 10,000A, 8x20 microsecond waveform: 200 percent of system voltage.
         3) IEEE B3 combination wave: 300 percent of system voltage.

2.7 TYPE IC6 SPD

A. Approved Products:
   1. EDCO SLAC-12036.
   2. MTL TPAC-4W.
   3. Phoenix Contact BXT-N4X 4-Wire.

B. Product:

1. Field mounted for protection of field mounted equipment connected to 120V power and 4-20mA analog signal loops.
2. Type IC1 and Type IC5 SPDs mounted in a common enclosure.
3. Enclosure: Metallic or nonmetallic NEMA 4X.

2.8 TYPE IC7 SPD

A. Approved Products:
1. Eaton DDIN Series.
2. EDCO DRS Series.
3. MTL SD Series.
4. Phoenix Contact: PT Series.

B. Standards: UL 497B.

C. Design:
1. General:
a. Mounted internally to control panels for protection of equipment connected to a discrete signal.
b. Multi-stage hybrid solid state high performance suppression system.
c. Designed for series connection.
d. Enclosure: Metallic or plastic, flange or DIN rail mounting.
e. Field connection: Provide unit with external terminal screws for line and ground conductors.
2. Operating voltage: 24 Vdc or 24 Vac or 120 Vac or as indicated on the Drawings.
3. Modes of protection: All modes:
a. AC applications: L-N, L-G, N-G
b. DC applications: Pos-Neg, Pos-Gnd, Neg-Gnd.
4. Maximum continuous operating voltage: Less than 130 percent of system peak voltage.
5. Maximum surge current: 10,000 A.
6. Minimum repetitive surge current capacity:
a. The SPD shall meet one (1) of the following:
1) 1000 occurrences of a 200A, 10 x 1000 microsecond waveform.
2) 400 occurrences of a 500A, 10 x 1000 microsecond waveform.
3) 100 occurrences of a 400A, 10 x 700 microsecond waveform.
4) 100 occurrences of a 2000A, 8 x 20 microsecond waveform.
5) 10 occurrences of a 10,000A, 8 x 20 microsecond waveform.
7. Maximum clamping voltages, L-L (Pos-Neg):
a. The SPD shall meet one (1) of the following:
1) 400A, 10x700 microsecond waveform: 400 percent of system voltage.
2) 10,000A, 8x20 microsecond waveform: 400 percent of system voltage.
3) IEEE B3 combination wave: 250 percent of system voltage.
8. Maximum clamping voltages, L-G:
a. The SPD shall meet one (1) of the following:
1) 400A, 10x700 microsecond waveform: 200 percent of system voltage.
2) 10,000A, 8x20 microsecond waveform: 200 percent of system voltage.
3) IEEE B3 combination wave: 300 percent of system voltage.

2.9 SOURCE QUALITY CONTROL

A. Performance tests to be performed or independently verified by a certified testing laboratory.

B. The SPD are to be tested as a complete SPD system including: Integral unit level and/or component level fusing.

PART 3 - EXECUTION

3.1 INSTALLATION

A. Install products in accordance with manufacturer's instructions.

B. Type IC1 SPD:
   1. Provide on the following applications:
      a. Incoming 120 V power to all control panels.
      b. Line side of 120 V power terminals to equipment (e.g., PLCs, transmitters).
   2. Connected in series with the panel's or equipment’s branch circuit.
   3. Provide fuse protection as recommended by manufacturer.
   4. Flange mount or DIN rail mount in control panel.
   5. Connect all SPDs in the panel to the same grounding point.

C. Type IC2 SPD:
   1. Provide on the following applications:
      a. All desk top or rack mounted equipment that is cord and plug connected (e.g., computers, printers) {except where power is sourced from a UPS.}
   2. Locate near equipment to be protected.

D. Type IC3 SPD:
   1. Provide on the following applications:
      a. 120 V discrete PLC RTU signals into a control panel from float switches, position switches, etc., where the device is mounted outdoors or in a remote building or structure from the control panel and where the control conductors are routed above grade or underground.
      b. 120 V discrete {PLC RTU signals into a control panel from float switches, position switches, etc., where both the device and control panel are mounted outdoors and the control conductors are routed above grade or underground.
   2. Connected in series with the equipment.
   3. Provide fuse protection as recommended by manufacturer.
   4. Flange mount or DIN rail mount in control panel.
   5. Connect all SPDs in the panel to the same grounding point.

E. Type IC4 SPD:
   1. Provide on the following applications:
      a. Loop powered transmitter (flow, level, etc.) where the transmitter is mounted outdoors or in a remote building or structure from the control panel and the signal conductors are routed above grade or underground.
      b. Loop powered transmitter (flow, level, etc.) where both the transmitter and control panel are mounted outdoors and the signal conductors are routed above grade or underground.
   2. Connect in series with the equipment.
   3. Attach to spare conduit entry of transmitter or inline of conduit at the transmitter.
   4. Bond transmitter to a grounded structure or provide a ground rod.
   5. Ground shield at control panel end.
   6. Verify SPDs series resistance and capacitance does not interfere with the transmitters signal.

F. Type IC5 SPD:
   1. Provide on the following applications:
      a. Incoming 4-20mA signals into a control panel from transmitters (flow, level, etc.) where the transmitter is mounted outdoors or in a remote building or structure from the control panel and the signal conductors are routed above grade or underground.
      b. Incoming 4-20mA signals into a control panel from transmitters (flow, level, etc.) where both the transmitter and control panel are mounted outdoors and the signal conductors are routed above grade or underground.
   2. Connect in series with the equipment.

3. Flange mount or DIN rail mount in control panel.
4. Connect all SPDs in the control panel to the same grounding point.
5. Verify SPDs series resistance and capacitance does not interfere with the transmitters signal.

G. Type IC6 SPD:
1. Provide on the following applications:
a. Outdoor field mounted transmitter (flow, level, etc.) that requires 120 V power and provides a 4-20mA signal to a control panel where the conductors are routed above grace or underground.
2. Connect in series with the equipment.
3. Mounted adjacent to equipment.
4. Bond transmitter to a grounded structure or provide a ground rod.
5. Ground shield at control panel end.
6. Verify SPDs series resistance and capacitance does not interfere with the transmitters signal.

H. Type IC7 SPD:
1. Provide on the following applications:
a. Low voltage (e.g., 24 Vac, 24 Vdc) discrete PLC or RTU signals into a control panel from float switches, position switches, etc., where the device is mounted outdoors or in a remote building or structure from the control panel and where the control conductors are routed above grade or underground.
b. Low voltage (e.g., 24 Vac, 24 Vdc) discrete PLC or RTU signals into a control panel from float switches, position switches, etc., where both the device and control panel are mounted outdoors and the control conductors are routed above grade or underground.
2. Connect in series with the equipment.
3. Flange mount or DIN rail mount in control panel.
4. Connect all SPDs in the control panel to the same grounding point.

END OF SECTION

2014/01/01

SECTION 13500

PROGRAMMABLE LOGIC CONTROLLER (PLC) CONTROL SYSTEM

PART 1 - GENERAL

1.1 SUMMARY

A. Section Includes:
   1. Programmable logic controller (PLC) control system(s), including software, programming, and training.

B. Related Sections include but are not necessarily limited to:
   1. Division 00 - Bidding Requirements, Contract Forms, and Conditions of the Contract.
   2. Division 01 - General Requirements.
   3. Section 10400 Identification Devices.
   4. Section 13440 - Instrumentation for Process Control: Basic Requirements.
   5. Section 13441 - Control Loop Descriptions.
   6. Section 13448 - Control Panels and Enclosures.

1.2 QUALITY ASSURANCE

A. Referenced Standards:
   1. National Electrical Manufacturers Association (NEMA):
      a. ICS 1, General Standards for Industrial Control and Systems.

B. Qualifications:
   1. Installation supervisor shall have had experience in overseeing installation and startup of at least three (3) similar installations.
   2. Programmer(s) shall have had experience in programming PLCs for at least two (2) projects of similar size and complexity.

1.3 SUBMITTALS

A. There will be four new PLCs installed at this facility. They will be as identical as it is practical to make them.

B. Shop Drawings:
   1. See Specification Section 01340 for requirements for the mechanics and administration of the submittal process.
   2. See Specification Section 13440.
   3. Product technical data including:
      a. Annotated hard copies of PLC software programs.
         1) Submit program for logic in ladder diagram format as used for the specific PLC system.
         2) Annotate program listing to include the following:
            a) Written description of each rung's function.
            b) Reference to control loop number for each rung where applicable.
            c) Reference to instrumentation tag number of I/O devices for each rung where applicable.
         3) Provide written descriptions completely defining all function blocks used in program.
         4) Provide list of all addresses referenced in logic diagram with description of data associated with each address.
      b. Results of factory testing procedures.

c. Drawings containing the following information to be submitted as part of Specification Section 13448 submittals:
   1) Arrangement drawings for PLC system components.
   2) Panel and enclosure plans, sections and details.
   3) Access opening locations and required clearances for each panel and enclosure.
   4) Enclosure internal wiring and terminal blocks.
d. Catalog cut sheets containing information on PLC components to be submitted as part of this Specification Section submittals.

4. Certifications:
   a. Qualifications of installation supervisor.
   b. Qualifications of programmer(s).

C. Operation and Maintenance Manuals:
1. See Specification Section 01342 for requirements for:
   a. The mechanics and administration of the submittal process.
   b. The content of Operation and Maintenance Manuals.
2. Submit maintenance procedures available to Owner.
   a. Include the location and phone numbers of service centers (including 24 HR "hot lines").
   b. Provide specific information including operation and maintenance requirements, programming assistance, troubleshooting guide, parts ordering, field service personnel requests, and service contracts.

PART 2 - PRODUCTS

2.1 ACCEPTABLE MANUFACTURERS

A. Subject to compliance with the Contract Documents, the following manufacturers are acceptable:
1. Rockwell Automation, Allen-Bradley CompactLogix platform.
2. See Section 01062.

B. No like, equivalent or "or-equal" item is permitted.

2.2 PERFORMANCE AND DESIGN REQUIREMENTS

A. See Section 13440.

B. The PLC system shall accomplish the control requirements of the loop descriptions, Drawings, and Specifications.

C. PLC programming shall be documented and factory tested.

D. The PLC system shall operate in ambient conditions of 32 to 140 DegF temperature and 5 to 95 percent relative humidity without the need for purging or air conditioning.

E. Environmental Controls:
1. Furnish circulation fans in solid state control system enclosures.
2. Over-temperature switches shall be utilized to provide special cooling if required to maintain operating temperatures within the manufacturer's specified range.
3. Air conditioning applications shall include means of preventing moisture condensation.

F. Where the PLC is utilized to control multiple trains of equipment and where the equipment in each train operates as a unit relatively independent of other equipment trains (e.g., facility with multiple boiler units or filter trains), the PLC components (I/O modules, power supplies, etc.) shall be assigned so that the failure of any one (1) component does not affect equipment on all trains.
1. I/O modules shall be segregated on a train basis unless required otherwise for safety reasons.

2. Where several equipment units operate in parallel, but are not considered assigned to a particular equipment train (e.g., multiple raw water pumps or chemical feed pumps all discharging into a common system), the PLC I/O modules associated with each equipment unit shall be assigned so that the failure of any one (1) I/O module does not affect all of the parallel operating equipment units.

G. All PLC control system components shall be capable of meeting or exceeding electromagnetic interference tests per IEEE C37.90.2.

H. Incorporate the following minimum safety measures:
1. Watchdog function to monitor:
   a. Internal processor clock failure.
   b. Processor memory failure.
   c. Loss of communication between processor and I/O modules.
   d. Processor ceases to execute logic program.
2. Safety function wiring: Emergency shutdown switches shall not be wired into the controller.
3. Safe wiring:
   a. Unless otherwise specified, activation of alarms and stopping of equipment shall result from the de-energization of control circuits, rather than the energization of control circuits.
   b. Low voltage control signal wires:
      1) Place in conduit segregated for that purpose only.
      2) Twisted shielded wire pair.
      3) Not located in the same conduit or bundle with power wiring.
4. Initial safety conditions:
   a. Utilize program module to dictate output states in a known and safe manner prior to running of control program.
   b. Utilize program each time PLC is re-initiated and the control program activated.
5. Monitoring of internal faults and display:
   a. Internal PLC system status and faults shall be monitored and displayed.
      1) Monitored items shall include:
         a) Memory ok/loss of memory.
         b) Processor ok/processor fault.
         c) Scan time overrun.
6. Control of programs: Protect access to PLC program loading with password protection or with locked, key operated selector switches.
7. Design PLC system with high noise immunity to prevent occurrence of false logic signals resulting from switching transients, relay and circuit breaker noise or conducted and radiated radio frequency interference.
8. Operator intervention:
   a. Logic system failure shall not preclude proper operator intervention.
   b. Safety shutdown of equipment or a system shall require manual operator intervention before the equipment or system operation may be reestablished.

2.3 COMPONENTS

A. PLC System Central Processor Unit (CPU):
1. CPU shall provide communications with other control systems and man-machine interfaces as specified.
2. Memory:
   a. Battery-backed RAM.
   b. EEPROM program back-up:
      1) Automatically download to RAM in the event RAM is corrupted.
3. Memory battery backup shall be capable of 60 days memory retention with fresh battery.
   a. Provide visual indication of battery status and alarm low battery voltage.

b. Memory battery backup shall be capable of 14 days memory retention after the "Battery Low" indicating LED is on.

4. Plug-in card design to allow quick field replacement of faulty devices.
   a. Provide unit designed for field replacement and expansion of memory without requiring rewiring or use of special tools.
5. 20 percent minimum spare useable memory capacity after all required programming is in place and operating.
6. Capable of executing all control functions required by the Specifications and Drawings.
7. Built-in three-mode (proportional-integral-derivative) control capabilities.
   a. As directly selectable algorithms requiring no user knowledge of programming languages.
8. On-line reconfigurable.
9. Lighted status indicators for "RUN" and "FAILURE."
10. Maximum scan times:
    a. Program scan: 20 mSec/K.
    b. I/O scan: 20 mSec.
11. Capable of manual or automatic control mode transfer from the operating console stations or from within the control strategy.
    a. Transfer shall be bumpless and balanceless.

B. Input/output (I/O) Modules:
1. Provide plug-in modular-type I/O racks with cables to connect to all other required PLC system components.
2. Provide I/O system with:
   a. I/O solid state boards with status lights indicating I/O status.
   b. Electric isolation between logic and field device.
   c. Capability of withstanding low energy common mode transient to 1000 V without failure.
   d. Incorporate noise suppression design.
   e. Capable of meeting or exceeding electrical noise tests, NEMA ICS 1-109.60-109.66.
   f. Capable of being removed and inserted into the I/O rack under power, without affecting any other I/O modules in the rack.
   g. Install 20 percent spare I/O modules.
3. Input/output connection requirements:
   a. Make connections to I/O subsystem by terminating all field wiring on terminal blocks within the I/O enclosure.
   b. Prewire I/O modules to terminal blocks.
   c. Provide terminal blocks with continuous marking strip.
   d. Size terminals to accommodate all active data base points and spares.
   e. Provide terminals for individual termination of each signal shield.
   f. Field wiring shall not be disturbed when removing or replacing an I/O module.
4. Discrete I/O modules:
   a. Interface to ON/OFF devices.
   b. I/O status indicator on module front.
   c. Voltage rating to match circuit voltage.
   d. Output module current rating:
      1) Match maximum circuit current draw.
      2) Minimum 1.0 continuous A/point for 120 Vac applications.
   e. Isolated modules for applications where one (1) module interfaces with devices utilizing different sources of power.
5. Discrete outputs shall be fused:
   a. Provide one (1) fuse per common or per isolated output.
   b. Provide blown fuse indication.
   c. External fusing shall be provided if output module does not possess internal fusing.
   d. Fuses provided external to output model shall:
      1) Be in accordance with module manufacturer's specifications.

2) Be installed at terminal block.

6. Analog I/O modules:
   a. Input modules to accept signals indicated on Drawings or Specifications.
   b. Minimum 12 bit resolution.
   c. I/O chassis supplied power for powering connected field devices.
   d. Differential inputs and outputs.
   e. User configurable for desired fault-response state.
   f. Provide output signals as indicated on Drawings and Specifications.
   g. Individual D/A converter for each output module.
   h. Individual A/D converter for each input module.

C. Power Supply Units:
1. Provide regulated power units:
   a. Designed to operate with PLC system and shall provide power to:
      1) All components of PLC system.
      2) All two-wire field instruments.
      3) Other devices as indicated on Drawings or Specifications.
   b. Capable of supplying PLC system when all of the specified spare capacity is utilized.
   c. Each power supply shall be sized such that it will carry no more than 75 percent of capacity under normal loads.
2. Electrical service to PLC system is 105 to 125 V, 60 Hz, +1 percent, 1 PH power.
3. Separate AC circuit breakers shall be provided for each power supply.
4. If the PLC system is field expandable beyond the specified spare capacity, and if such expansion requires power supply modification, note such requirements in the submittals and allow room for power supply modification in the PLC system enclosure.
5. Capable of meeting or exceeding electrical noise tests, NEMA ICS 1-109.60-109.66.
6. Power distribution:
   a. Immune to transients and surges resultant from noisy environment.
   b. Shall provide constant voltage level DC distribution to all devices.
7. Provide uninterruptible power supply (UPS) to sustain full power to UPS powered loads listed below for a minimum of 20 minutes following loss of primary power and to ensure that the transient power surges and dips do not affect the operation of the PLC system.
   a. UPS powered loads:
      1) All rack mounted PLC components.
      2) Local operator consoles.
      3) All power supplies furnished with the PLC and associated loads.
   b. Input:
      1) 120 Vac +10 percent.
      2) 60 Hz.
      3) Line fuse protection.
   c. Output:
      1) 120 Vac (5 percent.
      2) 60 Hz.
      3) Short circuit protected.
      4) Instantaneous transfer time.
   d. IEEE C62.41 Class A voltage surges of 6000 V attenuated to less than 50 V on the output.
   e. Battery: Maintenance free lead acid.

D. PLC System Enclosure:
1. In accordance with Section 13448.
2. Component placement:
   a. Mount all controller components vertically within the enclosure to allow maximum convection cooling.
   b. Either install power supplies above all other equipment with at least 10 IN of clearance between the power supply and the enclosure top, or adjacent to other components, but with sufficient spacing for circulation of cooling air.

c. Do not place I/O racks directly above the CPU or power supply.
d. Locate incoming line devices (isolation or constant voltage transformers, local power disconnects, surge suppressors, etc.) so as to keep power wire runs within an enclosure as short as possible.
e. If items such as magnetic starters, contactors, relays, and other electromagnetic devices must be located within the same enclosure as the PLC system components, place a barrier with at least 6 IN of separation between the magnetic area and the control area.
f. Place circulating fans close to major heat generating devices.
g. Segregate input/output modules into groups of identical type.

3. Wiring and grounding to be in accordance with Section 13448.
4. Termination requirements:
   a. In accordance with Section 13448.
   b. Make connections to I/O subsystem by terminating all field wiring on terminal blocks within the enclosure.
   c. Prewire I/O modules to terminal blocks.
   d. Size terminals to accommodate all active database points and spares.
   e. Provide terminals for individual termination of each signal shield.
   f. Field wiring shall not be disturbed when removing or replacing an I/O module.

E. PLC System Software and Programming:
1. Provide all hardware and programming required to provide communication between the PLC and the man-machine interface.
2. Provide programming to accomplish all control and monitoring requirements of the Drawings and Specifications.
3. Provide two (2) copies of control logic program on DVD or CD.
4. IBM compatible software.
5. Full documentation capability.
   a. Provide description for each rung.
6. On/off line programming.
7. Offline simulation prior to download.
8. Two-step commands requiring operator verification prior to deletion of any programming.

2.4 ACCESSORIES

A. Provide all accessories required to furnish a complete PLC control system to accomplish the requirements of the Drawings and Specifications.

2.5 SOURCE QUALITY CONTROL

A. Provide a performance test after factory completion and prior to shipment.
1. Conduct a test where the system is operated continuously and checked for correct operation including loop controls, displays, printing, keyboard functions, alarm responses, and on/off sequencing control.
2. Conduct testing with dummy I/Os to verify each control loop operation.
3. Allow for Owner and Engineer representatives to witness testing program.
   a. Provide minimum of 15 days notice prior to testing.
4. Do not ship prior to successful completion of this testing program.

2.6 MAINTENANCE MATERIALS

A. Furnish Owner with the following extra materials:
1. One (1) spare I/O card of each card type for every 10 cards or fraction thereof installed.

PART 3 - EXECUTION

3.1 INSTALLATION

A. Install PLC control system in accordance with manufacturer's written instructions.

3.2 FIELD QUALITY CONTROL

A. Employ and pay for services of equipment manufacturer's field service representative(s) to:
   1. Inspect equipment covered by these Specifications.
   2. Supervise adjustments and installation checks.
   3. Maintain and submit an accurate daily or weekly log of all commissioning functions.
      a. All commissioning functions may be witnessed by the Engineer.
      b. All reports shall be cosigned by the Contractor and the Engineer if witnessed.
   4. Conduct startup of equipment and perform operational checks.
   5. Provide Owner with a written statement that manufacturer's equipment has been installed properly, started up, and is ready for operation by Owner's personnel.

3.3 DEMONSTRATION

A. Demonstrate system in accordance with Section 01650.

B. On-Site Training:
   1. Provide employee of the manufacturer or certified representative to provide 3 days of operation and maintenance training at the Project site after the system has successfully undergone all field testing and acceptance procedures.
      a. As a minimum, training shall cover:
         1) Hardware overview.
         2) Software overview.
         3) Maintenance.
         4) Trouble shooting.
         5) Operation, e.g., changing set points, passwords, etc.

END OF SECTION

PLC-700 Discrete Inputs

No.	TAG	DESCRIPTION	FROM	VIA	P&ID
1	XA-700	Site power loss	panel relay	Hardwired	00Y-08
2	YI-702	Generator Running	Generator	Hardwired	00Y-08
3	XA-702	Generator Trouble	Generator	Hardwired	00Y-08
4	XA-701	Tramont Fuel system Trouble	Fuel Unit	Hardwired	00Y-08
5	LAH-701A	High Fuel In Day Tank	Fuel Unit	Hardwired	00Y-08
6	LAL-701	Low Fuel In Day tank	Fuel Unit	Hardwired	00Y-08
7	LAH-701B	Fuel in Rupture Basin	Fuel Unit	Hardwired	00Y-08
8	YI-703A	ATS On Normal Power	ATS	Hardwired	00Y-08
9	YI-703B	ATS on Emergency Power	ATS	Hardwired	00Y-08
10	XA-703	ATS Trouble	ATS	Hardwired	00Y-08
11					
12					

AUTODIALER ALARMS

NEW AUTODIALER SPREADSHEET

DO#1	DO#2	DO#3	DO#4	DO#5	DO#6	DO#7	DO#8	DO#9	DO#10	DO#11	DO#12
WTP GENERAL	WTP CRITICAL	WTP ON BYPASS	STRAWBERRY GENERAL	STRAWBERRY CRITICAL	RUBY PIT GENERAL	HOODOO GENERAL	HOODOO CRITICAL	RUBY PIT GENERAL	RUBY PIT CRITICAL	ANCHOR PIT GEN	ANCHOR PIT CRIT

Operations shall decide which alarms warrant a general response and which require immediate action.
these will be itemized in this list to allow the programmer to build this table in the PLC
Not all points will be in this list.

2010/05/30

SECTION 13502

COMPUTER NETWORK AND HUMAN MACHINE INTERFACE (HMI) HARDWARE

PART 1 - GENERAL

1.1 SUMMARY

A. Section Includes:
   1. Computer network and HMI hardware requirements which includes but is not necessarily limited to:
      a. LCD flat panel type monitors.
      b. HMI computer workstations.
      c. Network servers.
      d. Ethernet switches.
      e. Printers.
      f. Software.
      g. Accessories and maintenance materials.

B. Related Specification Sections include but are not necessarily limited to:
   1. Division 00 - Bidding Requirements, Contract Forms, and Conditions of the Contract.
   2. Division 01 - General Requirements.
   3. Section 13440 - Instrumentation for Process Control: Basic Requirements.

1.2 QUALITY ASSURANCE

A. Referenced Standards:
   1. Institute of Electrical and Electronics Engineers, Inc. (IEEE):
      a. 802.3, Information Technology - Local and Metropolitan Area Networks - Part 3: Carrier Sense Multiple Access with Collision Detection (CSMA/CD) Access Method and Physical Layer Specifications.
         1) 802.3u: IEEE Standards for Local and Metropolitan Area Networks: Supplement to Carrier Sense Multiple Access with Collision Detection (CSMA/CD) Access Method and Physical Layer Specifications Media Access Control (MAC) Parameters, Physical Layer, Medium Attachment Units, and Repeater for 100 Mb/s Operation, Type 100BASE-T.
         2) 802.3x: IEEE Standards for Local and Metropolitan Area Networks: Specification for 802.3 Full Duplex Operation.

1.3 DEFINITIONS

A. HMI: Human Machine Interface.

B. LCD: Liquid Crystal Display.

C. OPC: “OLE for Process Control”, a software standard utilizing a client/server model that makes interoperability possible between automation/control applications and field systems/devices.

D. PC: Personal Computer.

E. RAID: Redundant Array of Independent Disks, a method of storing the same data in different places on multiple hard disks.

F. RAM: Random Access Memory.

G. SCSI: Short for Small Computer System Interface, a parallel interface standard used for attaching peripheral devices to computers.

H. SDRAM: Synchronous Dynamic RAM.

I. SNMP: Simple Network Management Protocol, a set of protocols for managing complex networks.

J. TFT: Thin-Film Transistor, a technology for building LCD screens.

1.4 SUBMITTALS

A. Shop Drawings:
1. See Specification Section 01340 for requirements for the mechanics and administration of the submittal process.
2. See Specification Section 13440.
3. Product technical data including:
   a. Acknowledgement that products submitted meet requirements of standards referenced.

B. Operation and Maintenance Manuals:
1. See Specification Section 01342 for requirements for:
   a. The mechanics and administration of the submittal process.
   b. The content of Operation and Maintenance Manuals.

PART 2 - PRODUCTS

2.1 ACCEPTABLE MANUFACTURERS

A. Subject to compliance with the Contract Documents, the manufacturers listed within the following Articles are acceptable.

B. Submit request for substitution in accordance with Specification Section 01640.

2.2 LCD FLAT PANEL TYPE MONITORS

A. Acceptable Manufacturers:
1. Dell.
2. NEC.
3. Samsung.
4. Hewlett-Packard.

B. Design Requirements:
1. Type of display: Color TFT active matrix LCD.
2. Native Resolution:
   a. 24 IN: 1600 x 1200.
3. Aspect ratio: 4:3.
4. Image brightness: Minimum 300 cd/m2.
5. Display image contrast ratio: 2000:1 or higher.
6. Maximum sync rate (vertical scan rate x horizontal scan rate): At least 75 Hz x 80 KHz.
7. Viewing angle: 170 degrees both vertical and horizontal.
8. Adjustable tilt and swivel.
9. Anti-glare flat screen.
10. HDMI and DVI video connection.
11. Power input: 120 Vac.
12. Speakers: display mounted soundbar.

2.3 HMI COMPUTER WORKSTATIONS

A. Acceptable Manufacturers:
1. Dell.
2. HP.

B. PCs shall be in accordance with the following minimum requirements:
1. Minimum 3 GHz processing speed and 1 MB cache.
2. Minimum 8 GB RAM, expandable up to 16 GB.

3. Minimum 540 GB hard drive.
4. Chip: Dual-core or better.
5. Hard disk drive: SATA 3.0 GB/s, 7200 RPM with 16 MB cache.
6. DVD-RW drive.
   a. Read speed:
      1) 40x CD.
      2) 16x DVD.
7. Accelerated graphics port video card with minimum 256 MB.
8. Communication ports as listed below:
   a. All communication ports as required by functional requirements of Contract Documents.
   b. Minimum four (4) USB 2.0.
   c. Ethernet 10/100 MB/s, 1 GB/s.
9. Ethernet networking cards for LAN communication.
10. Case style: Tower.
11. Case color: Black.

C. Keyboards:
1. Incorporate Standard IBM-QWERTY design with numeric keypad and assigned function keys.
2. Sculptured keys.
3. Tactile feedback.

D. High performance mouse with laser sensor and tilt wheel.

E. Schedule:
1. Provide PCs for the following HMIs:

TAG NO	LOCATION
HMI-500	WTP

2.4 PORTABLE PROCESS CONTROL COMPUTER

A. Acceptable Manufacturers:
1. Dell
2. HP

B. PCs shall be in accordance with the following minimum requirements:
1. Ultrabook Style with minimum 13.3 inch screen.
2. Minimum 3 GHz processing speed and 1 MB cache.
3. Minimum 8 GB RAM.
4. Minimum 256 GB solid state drive
5. Chip: Dual-core or better.
6. Accelerated graphics port video card with minimum 256 MB shared memory allocation.
7. 1600 X 1200 Pixel resolution.
8. Communication ports as listed below:
   a. All communication ports as required by functional requirements of Contract Documents.
   b. Minimum four (2) USB 3.0.
   c. Ethernet 10/100 MB/s, 1 GB/s.
   d. Bluetooth Capable.
9. Ethernet networking capability for LAN communication.
10. Wireless connectivity for full WiFi capability.
11. Case style: Portable
12. Case color: Standard.
13. Include factory standard carrying case.

C. Keyboards:

1. Incorporate Standard IBM-QWERTY design and assigned function keys.
2. Sculptured keys.
3. Tactile feedback.

D. High performance Bluetooth connected mouse with laser sensor and tilt wheel.

E. Schedule:
1. Provide PCs for the following HMIs:

TAG NO	LOCATION
HMIp-501	PORTABLE

2.5 ETHERNET SWITCHES

A. Acceptable Manufacturers:
1. Hirschmann.
2. Siemens.
3. N-TRON.
4. Weed.
5. GarrettCom.
6. Allen-Bradley/Cisco.

B. Managed Ethernet Switches:
1. Design and fabrication:
a. Support Ethernet 100 MBit/s.
b. Support SNMP and Web based management.
c. Rapid Spanning Tree Protocol.
d. IGMP (Internet Group Management Protocol) support for IP multicast filtering to enable switches to automatically route messages only to appropriate ports.
e. 10/100 MBit/s twisted pair ports (RJ45) as required for communication with devices as depicted in the Contract Documents.
1) Unless otherwise noted, provide at least two (2) spare 10/100 MBit/s port (twisted pair) at each Ethernet switch.
f. Check all received data for validity.
1) Discard invalid and defective frames or fragments.
g. Monitor connected TP/TX line segments for short-circuit or interrupt using regular link test pulses in accordance with IEEE 802.3.
h. Monitor attached fiber optic lines for open circuit conditions in accordance with IEEE 802.3.
i. As applicable, meet requirements of IEEE 802.3.
j. Power switch with 24 Vdc power input.
k. Provide LED status lights to indicate:
1) Power: Supply voltage present.
2) Fault.
3) Port status.
l. Environmental rating:
1) Operating temperature: 32 DegF to 122 DegF.
2) Humidity: 95 percent relative humidity, non-condensing.
m. Provide Power over Ethernet capability for at least one port.

C. Unmanaged Ethernet Switches:
1. Design and fabrication:
a. Support Ethernet 100 MBit/s.
b. 10/100 MBit/s twisted pair ports (RJ45) as required for communication with devices as depicted in the Contract Documents.
1) Unless otherwise noted, provide at least two (2) spare 10/100 MBit/s port (twisted pair) at each Ethernet switch.
c. Check all received data for validity.

1) Discard invalid and defective frames or fragments.

d. Monitor connected TP/TX line segments for short-circuit or interrupt using regular link test pulses in accordance with IEEE 802.3.

e. Monitor attached fiber optic lines for open circuit conditions in accordance with IEEE 802.3.

f. As applicable, meet requirements of IEEE 802.3.

g. Power switch with 24 Vdc power input.

h. Provide LED status lights to indicate:

1) Power: Supply voltage present.

2) Fault.

3) Port status.

i. Environmental rating:

1) Operating temperature: 32 DegF to 122 DegF.

2) Humidity: 95 percent relative humidity, non-condensing.

j. Provide Power Over Ethernet for at least one port.

2.6 PRINTER

A. Ink Jet Printer:

1. Acceptable manufacturers:
   a. Canon.
   b. Hewlett Packard.
   c. Epson.
   d. Lexmark.
2. Rated monochrome print speed:
   a. Draft mode: Minimum 20 pages per minute.
   b. Normal mode: Minimum nine (9) pages per minute.
3. Rated color print speed:
   a. Draft mode: Minimum 13 pages per minute.
   b. Normal mode: Minimum five (5) pages per minute.
4. Color resolution: Up to 4800 x 1200 dpi.
5. Minimum input tray capacity: 150 sheets.
6. Minimum output tray capacity: 50 sheets.
7. Capable of printing:
   a. Letter size paper.
   b. Legal size paper.
8. Operating temperature: 50 to 90 DegF.
9. Operating humidity: 20 to 80 percent (non-condensing).
10. Integral interfaces:
    a. Ethernet.
    b. USB.

B. Schedule:

1. Provide printers in accordance with the following schedule:

TAG NO.	LOCATION	TYPE	SERVICE
PRT-001	Plant Control Room	Ink Jet - Color	Alarm, Reports

2.7 SOFTWARE

A. Provide all software and associated programming/configuration required to meet performance requirements of the Contract Documents.

1. At substantial completion of the Project:
   a. Turn current licenses for all software over to the Owner in the Owner's name and install the latest version, upgrade or service pack for all software.

b. Provide the respective software supplier's Comprehensive Support Contract for all software covering a full one (1) year warranty period following substantial completion which shall provide no cost software upgrades, service packs and tech support from the software supplier.

B. HMI Software:
1. Subject to compliance with the Contract Documents, the following HMI software packages are acceptable:
   a. Rockwell Automation RS VIEW Factory Talk.
   b. Wonderware Graphics or owner approved equal
2. Runtime HMI software:
   a. Provide server/client software with capability for all HMIs to be active simultaneously.
3. Development software:
   a. Install development software on engineering workstation.
4. Data Historian software:
   a. Provide data historian software compatible with HMI software package.
5. Tag name quantity requirements:
   a. As required to meet performance requirements of the Contract Documents.
   b. Capable of handling an additional 20 percent more tags without impacting the license.

C. Ethernet Network Management Software:
1. Software to include an OPC Server, capable of integrating real-time SNMP tag data into OPC client enabled HMI software databases.
2. Software shall allow control of polling rate for SNMP requests, as well as limit access to write SNMP data on each SNMP tag.
3. Software shall have pre-developed tag databases for several manufacturer's Ethernet network devices, as well as generic MIB (Management Information Base) tag databases.
4. Software shall have integrated OPC client data viewer software, so that SNMP data may be viewed without having to create HMI tags.

D. Provide each PC with the latest edition of the following software:
1. Operating system: Microsoft Windows 7 Professional.
2. Microsoft Word.
3. Microsoft Excel.

E. All software must be latest edition and licensed to the Owner.

2.8 ACCESSORIES AND MAINTENANCE MATERIALS

A. Provide all accessories required to furnish a complete computer-based network for the control system to accomplish the requirements of the Drawings and Specifications.

B. Furnish Owner with the following extra materials:
1. One (1) spare black ink cartridge per inkjet printer provided.
2. One (1) spare color ink cartridge per inkjet printer provided.

PART 3 - EXECUTION

3.1 DEMONSTRATION

A. Demonstrate system in accordance with Specification Section 01650.

3.2 INSTALLATION AND CHECKOUT

A. Provide installation and checkout in accordance with Specification Section 13440.

END OF SECTION

2014/05/30

SECTION 13504

CONFIGURATION REQUIREMENTS: HUMAN MACHINE INTERFACE (HMI) AND REPORTS

PART 1 - GENERAL

1.1 SUMMARY

A. Section Includes:
   1. Configuration requirements for HMI and reports which includes but is not necessarily limited to.
      a. Specific software functional descriptions.
      b. Graphics requirements.
      c. HMI functionality requirements.
      d. Plant overview screens.
      e. Process overview screens.
      f. Detail displays.
      g. Trend displays.
      h. PLC hardware/HMI status screen.
      i. Alarm monitoring.
      j. Report generation.
      k. Configuration standards and conventions.
      l. Screen configuration review meetings.
      m. Report configuration review meetings.
      n. Coordination.

B. Related Specification Sections include but are not necessarily limited to:
   1. Division 00 - Bidding Requirements, Contract Forms, and Conditions of the Contract.
   2. Division 01 - General Requirements.
   3. Section 13440 - Instrumentation for Process Control: Basic Requirements.

1.2 QUALITY ASSURANCE

A. Qualifications:
   1. Programmer(s) shall have had experience in software configuration and installation for at least two (2) projects of similar size and complexity.

1.3 DEFINITIONS

A. HMI: Human Machine Interface.

B. I/O: Input/Output.

C. OLE: Object Linking and Embedding, a document standard developed by Microsoft that enables the creation of an object with one application and the linking or embedding of the object in a second application.

D. OPC: "OLE for Process Control"; a software standard utilizing a client/server model that makes interoperability possible between automation/control applications and field systems/devices.

E. PC: Personal Computer.

F. PLC: Programmable Logic Controller.

1.4 SUBMITTALS

A. Shop Drawings:
   1. See Specification Section 01340 for requirements for the mechanics and administration of the submittal process.
   2. See Specification Section 13440.
   3. Software Configuration Standards and Conventions document.
   4. Graphic screen displays; provide in actual colors utilized.
   5. Sample reports.
   6. Certifications: Qualifications of programmer(s).

B. Operation and Maintenance Manuals:
   1. See Specification Section 01342 for requirements for:
      a. The mechanics and administration of the submittal process.
      b. The content of Operation and Maintenance Manuals.
   2. Software Configuration Standards and Conventions - final version.

C. Informational Submittals:
   1. Results of factory testing procedures.
   2. Proposed training agendas and schedule.

1.5 GENERAL FUNCTIONAL REQUIREMENTS

A. Software Functional Requirements:
   1. General functional requirements for system configuration are indicated on the Drawings and described in the Specifications.
   2. The information presented herein and indicated on the Drawings illustrates the general functional intent of the system and may not be sufficient to fully configure the system.
   3. The Contractor is responsible for determining what additional information may be required to complete the configuration tasks, and for obtaining this information from the Owner.

B. Available Process Values:
   1. All process alarm, equipment status, and process variable values shall be available at any HMI.
   2. If communications to a particular I/O point has failed for any reason, then wherever that data is displayed, the software shall post a visual indication that the point is not valid.

C. Provide comprehensive on-line help for all development functions.

D. Manual Entry of Data:
   1. All PC-based HMIs must allow manual entry of surrogate data and other variables, which must then be available for display and use in reports.
      a. Operator-entered commands from any of the operator workstations must be logged by the computer servers.

E. System Failure:
   1. Failure of any PLC, remote I/O hardware, or network communication link must be individually alarmed at HMIs.

F. Software licensing shall allow the plant HMI and OIT to be active simultaneously.

G. All process related functions, calculations, timers, and numeric manipulations, shall be accomplished in the local PLC hardware and not in the HMI.
   1. The HMI shall function as a monitoring system, not as a process controller.
   2. The HMI shall transfer data to the PLC system and the PLC system shall perform all control algorithms.

1.6 SECURITY

A. Fully integrate security into the SCADA system to allow only users with appropriate security levels access to individual parts of the system.

PART 2 - PRODUCTS

2.1 SPECIFIC SOFTWARE FUNCTIONAL DESCRIPTIONS

A. Specific functional requirements for various software control blocks within the computer system are as follows.

B. Descriptions are general and are not intended to fully indicate the complete functionality of the system.
   1. Monitoring of process values:
      a. Process values derived from analog process variable signals must be historically archived.
         1) Store all historical data with time and date of occurrence.
         2) Make values available for use in reports.
         3) Assign high and low alarms to process values as defined below and otherwise deemed appropriate.
      b. Provide capability for computer server(s) to retrieve real-time values from the PLC system at adjustable time periods.
      c. Alarm limits:
         1) Set per direction from the Owner.
         2) An operator having proper security authorization must be able to enable, disable, and adjust the setpoint of any individual alarm.

C. Utilize graphic screen displays at the HMI(s) to provide monitoring and control functionality.
   1. Hierarchy of HMI screens is in descending order as follows:
      a. Plant overview screen(s).
      b. Process overview screens.
      c. Process screens.
      d. Pop-up/control screens.

D. HMI operator interface functionality shall include:
   1. Indication of process variables.
   2. Configuration of control loop parameters (e.g., setpoints, gains, etc.).
   3. Adjustment of controller output.
   4. Display of real time and historical process trends.
   5. Selector switch and pushbutton station controls.
   6. System and process status indicators.
   7. Graphic representation of plant operations with interactive status and measurement symbols.
   8. Annunciation.

E. Graphics:
   1. Utilize dynamic variables with unique tags per graphic.
   2. Dragging the mouse over designated process areas of screen shall allow the operator to select predetermined processes or equipment and drill down to site-specific detail screens.
   3. Critical "overview" information such as tank levels, flows and pressures shall be indicated through data fields or animation effects such as level fills or color change.
   4. All monitored and or controlled process equipment shall be animated or color-highlighted to indicate status changes.
      a. For example, a pump "running" condition shall be signified by the pump color changing to bright red.
   5. Tank and vessel levels shall be indicated with a tabular data field and by graphic "fill" simulating a rising or falling level within the tank or vessel.
   6. Provide the ability to "drill down" to detail screens or graphics.
      a. Clicking on a device or process area shall generate a detail graphic or pop-up window to access specific data or control functions.
      b. All operator adjustments (e.g., set point adjustment, mode selection) shall be accomplished via a pop-up display, and shall not be allowed on the process screen.

7. Standard symbol library:
    a. User defined.
    b. Must not require software programming.
8. Single keystroke access from graphic to group display or other custom graphic displays.
9. Capable of being edited by moving, copying, or grouping user defined areas of screen.
10. Utilize a navigation bar.
    a. Navigation bar utilized on every screen.
    b. Navigation bar to include navigation functions, active alarm notification, security functions, current date/time display, "PRINT SCREEN" pushbutton, and other functions as required and as agreed upon at the Screen Configuration Review Meetings.

F. Plant Overview Screens:
1. As a minimum, provide Plant Overview screens as listed below.
    a. This list is meant to serve as an initial guide; final determination of overview screen requirements will be made during the Configuration Conferences.

G. Process Overview Screens:
1. As a minimum, provide screens as listed below.
    a. This list is meant to serve as an initial guide; final determination of process and equipment screen requirements will be made during the Configuration Conferences.
2. At a process overview screen, the operator shall be able to select a specific process screen for monitoring/control purposes.
    a. Monitoring and control functions available at the selected process screen include but are not limited to the following:
        1) Select individual equipment items for monitoring and control.
        2) Select a control loop or point for control action.
        3) Change control mode of loop selected (manual, automatic, cascade).
        4) Change setpoint.
        5) Issue commands to start/stop and open/close two-state equipment.
        6) For manual loading output stations, the operator shall be able to manipulate analog output values.
        7) Select a loop and initiate further display, such as the detail display, trend, or hourly averaging.
        8) Display and change ratio and bias values.
        9) Control field equipment such as motor-operated valves and switches.

H. Detail Display:
1. Provide separate display for each point.
    a. Representations of each analog and digital point shall be single user configured faceplate.
    b. Display shall include alphanumeric representations of all variables and parameters for single loops including but not limited to:
        1) Alarm points.
        2) Limits.
        3) Constants.
        4) Interconnections to other loops.
        5) Calculating functions.

I. Trend Displays:
1. Real time historical trend displays.
2. Real time on-line trend displays.
3. Capable of displaying multiple points per display.
4. Operator shall be able to select any desired sample time interval.
5. Provide flexibility and easy access to real time and historical trend information for any variable TAG defined within the SCADA application.
    a. As a minimum, provide the following:
        1) Provide capability for the user to define trend scenarios.

2) Provide a button to open a dialog window to select multiple variable TAGS and save them as a trend scenario for future use.
3) Provide a pull-down menu to allow the user to open saved trend scenarios.
4) Provide a button to allow the user to select real-time or historical trends.
5) Provide a button to save displayed trend info to a file for export to external software applications (such as Microsoft Excel).
6) Provide a Print Trend button to allow user to print current trend.

6. Utilize Historical Data Server(s) to collect and manage data.

J. PLC Hardware/HMI Status Screen:
1. Provide a status screen to depict status conditions and diagnostic information for all major networked equipment.
2. Depict communication status for all networked communicating devices, such as PLC processors, Ethernet switches, PCs, and radios.

K. Alarm Monitoring:
1. Provide standard alarm screen functionality to ensure flexibility and quick access to live alarms, alarm history and alarm grouping parameters.
   a. As a minimum, include the following features and functionality:
      1) An Alarm Screen header bar to head all alarm pages and reside below the Navigation Bar.
      2) Buttons to dynamically switch between Alarm Summary and Alarm History.
      3) A menu to allow user to select and open historical alarm archives.
         a) Utilize a time-date stamp file structure.
      4) Pull-down menu bar to select operator configured alarm groups.
      5) Capability to sort alarms by priority and to define priority for all system alarms.
      6) Capability to filter or group alarms.
2. Analog alarms:
   a. The SCADA software shall monitor analog and discrete variables and calculated conditions, and determine if the variable is in an alarm condition.
   b. For each Analog Tag, an alarm for each of the following conditions shall be assignable:
      1) Low-low.
      2) Low.
      3) High.
      4) High-high.
      5) Deviation low.
      6) Deviation high.
      7) Rate of change.
   c. Provide adjustable dead bands and delay timers for all analog alarms.
3. Present alarms in order of:
   a. Priority.
   b. Time of occurrence.
   c. Non-acknowledged presented ahead of acknowledged.
4. Utilize single keystroke or pushbutton to:
   a. Acknowledge alarms.
5. Alarm list presented to operator shall include:
   a. Time of occurrence.
   b. Time of acknowledgement.
   c. Description.
   d. Acknowledgement status.
6. Alarm list printed by either of the following:
   a. On command.
   b. Periodically.
7. Audible alarming capability for user selected alarms.

L. Report Generation:
1. Base bid on the generation of the following reports:
a. Minimum of 2 formatted reports.
1) Report form and content shall be determined at the Report Configuration Review Meetings.
2) Each report shall contain daily, weekly, and monthly average calculated values.
3) Each report shall contain between 20 and 30 measured parameters.
b. List of all entries initiated by operator including the following:
1) Console key changes.
2) Beginning and final values of setpoint and output changes.
3) Mode changes (i.e., auto to manual).
4) Time change was made.
c. Event list:
1) Description of selected events.
2) Time of event.
2. Custom report capabilities:
a. User configurable.
b. Contain selected information from any log, event, or alarm list.
c. Capable of producing custom log report for periodic and on-demand printing of a list of process or calculated variables.
d. Reports shall not require software programming by the user to setup.
3. Control of programs:
a. Protect access to configuration via password protection.

2.2 SOURCE QUALITY CONTROL

A. Include performance test of HMI software in factory with the overall PLC andRTU System test.
1. Conduct a test where the system is operated continuously and checked for correct operation including loop controls, displays, printing, keyboard functions, alarm responses, and on/off sequencing control.
2. Allow for Owner and Engineer representatives to witness testing program.
a. Provide minimum of 15 days notice prior to testing.

PART 3 - EXECUTION

3.1 CONFIGURATION REQUIREMENTS

A. Provide all programming and configuration required for all HMIs and OITs furnished or modified under this Contract.

3.2 CONFIGURATION STANDARDS AND CONVENTIONS

A. Prepare and submit a "Software Configuration Standards and Conventions."
1. Submit for review and approval prior to commencing with software configuration.
2. Describe and define such items as:
a. Proposed graphic display process colors/representations.
b. Color standards for "ON," "OFF," and "ALARM" conditions.
c. Font type and size.
d. Alarm handling conventions.
e. Methods for navigation between displays.
f. Address usage/naming conventions.
g. Security setup.
3. Prior to submitting the initial draft document, the Contractor must meet with the Owner to review any of the Owner’s existing standards and conventions.

4. In addition to submitting the initial document for review, submit an updated version of the document as part of the Operation and Maintenance Manuals.
    a. Revise this document to include any additional standards that are established throughout the configuration process.

B. It is the intent of these specifications to provide the end user with state-of-the-art functionality.
1. Minimum standards are as follows:
    a. Depict the actual process equipment configuration as accurately as possible.
2. All overview and site-specific screens shall incorporate a "navigational header bar" similar in function and appearance to *Microsoft Internet Explorer*.
    a. The intention of this Specification is to provide a familiar, user-friendly navigation throughout the graphical displays.

3.3 SCREEN CONFIGURATION REVIEW MEETINGS

A. Conduct a minimum of two configuration conferences with the Owner to review and discuss system configuration programming and related topics.
1. The purpose of the conferences will be to discuss, in detail, how each I/O point will be handled and the types, quantities, hierarchies, and functioning of display screens.
2. Review of the Owner's existing systems, standards, conventions, file and tag naming requirements, font type and size requirements, and reporting requirements must be part of each conference.
3. Review the navigation bar to be utilized.
4. Conferences will be held in at a site designated by the Owner.
5. Each screen will be reviewed at each conference.
    a. If required, to review all screens, each conference will occur on multiple days.
6. Submit 5 color copies of printed screens via shop drawing submittal process 10 calendar days before each conference.
7. Bring equipment to project screens on wall or provide multiple monitors for viewing by attendees.

B. Proposed graphic screens and report formats must be reviewed with the Owner throughout the configuration process.

3.4 REPORT CONFIGURATION REVIEW MEETINGS

A. Conduct a configuration conference with the Owner to review and discuss the reports and report formats.
1. Review of the Owner's existing systems, standards, conventions, and reporting requirements must be part of each conference.
2. The conference(s) will be held in at a site designated by the Owner.
3. Each report will be reviewed at each conference.
    a. If required, to review all reports, each conference will occur on multiple days.
4. Provide 5 copies of printed sample reports via shop drawing submittal process 10 calendar days before each conference.

B. Proposed report formats must be reviewed with the Owner throughout the configuration process.

3.5 COORDINATION

A. Coordinate as required with other contractors and vendors to seamlessly integrate all HMI monitoring and control functions.
1. To the greatest extent possible, integrate graphics presentation for all systems into screens utilizing one common HMI software.

B. Examples of systems that utilize separate application software packages and thus require coordination include, but are not necessarily limited to:
1. Pre-purchased control systems:
    a. Lime Slaking.
    b. Water filter System.

c. Polymer System.

3.6 FIELD QUALITY CONTROL

A. Employ and pay for services of equipment manufacturer's field service representative(s) to:
   1. Inspect equipment covered by this Specification Section.
   2. Supervise adjustments and installation checks.
   3. Maintain and submit an accurate daily or weekly log of all commissioning functions.
      a. All commissioning functions may be witnessed by the Engineer.
      b. All reports shall be cosigned by the Contractor and the Engineer if witnessed.
   4. Conduct startup of equipment and perform operational checks.
   5. Provide Owner with a written statement that manufacturer's equipment has been installed properly, started up, and is ready for operation by Owner's personnel.

3.7 DEMONSTRATION

A. Demonstrate system in accordance with Specification Section 01650.

B. On-Site Training:
   1. Provide employee of the manufacturer or certified representative to provide 3 days of operation and maintenance training at the Project site after the system has successfully undergone all field testing and acceptance procedures.
      a. As a minimum, training shall cover:
         1) Hardware overview.
         2) Software overview.
         3) Maintenance.
         4) Trouble shooting.
         5) Operation, e.g., changing set points, passwords, etc.

END OF SECTION

LOW – VOLTAGE CIRCUIT BREAKER (CB). RATINGS AND NO. OF POLES AS SHOWN. WHEN SPECIFIC TYPE IS REQUIRED, X INDICATES TYPE.

TYPES:
MCCB – MOLDED CASE
ICCB – INSULATED CASE
LVP – LOW – VOLTAGE POWER
MCP – MOTOR CIRCUIT PROTECTOR (RATING PER CONNECTED LOAD)

SEPARATELY MOUNTED CIRCUIT BREAKER; SEE ELECTRICAL ONE – LINE DIAGRAM OR SCHEDULE FOR DESCRIPTION

GROUND FAULT PROTECTION

MEDIUM – VOLTAGE CIRCUIT BREAKER

FUSE, SIZE, AND NUMBER OF FUSES AS NOTED

FUSED CUTOUT, CURRENT RATING, FUSE SIZE, AND NUMBER OF POLES AS NOTED

FUSIBLE SWITCH, CURRENT RATING, FUSE SIZE, AND QUANTITY AS NOTED

NON–FUSED SWITCH, CURRENT RATING, AND NUMBER OF POLES AS NOTED

DISCONNECT OR DRAWOUT CONNECTION

MAGNETIC MOTOR STARTER AND SEPARATELY MOUNTED COMBINATION MAGNETIC MOTOR STARTER

MOTOR CONTROLLER AND SEPARATELY MOUNTED MOTOR CONTROLLER WITH SHORT CIRCUIT PROTECTION AND DISCONNECT

MOTOR STARTER AND CONTROLLER SUBSCRIPTS:

A – MAGNETIC STARTER NEMA SIZE

B – STARTER TYPE
NONE – FULL VOLTAGE NON–REVERSING (FVNR)
FVR – FULL VOLTAGE REVERSING
2S – TWO SPEED
RVAT – REDUCED VOLTAGE AUTO TRANSFORMER

C – CONTROL DIAGRAM OR CONTROLS SCHEDULE NUMBER (IF REQUIRED)

D – CONTROLLER TYPE
VFD – VARIABLE FREQUENCY DRIVE
SS – SOLID STATE

SEPARATELY MOUNTED COMBINATION MOTOR STARTER OR CONTROLLER; SEE ELECTRICAL ONE – LINE DIAGRAM OR SCHEDULE FOR DESCRIPTION

THERMAL OVERLOAD ELEMENT

THERMAL OVERLOAD RELAY CONTACT

DISCONNECT OR SAFETY SWITCH, 30A, 3P, NON–FUSED UNLESS OTHERWISE NOTED

MOTOR WITH DESIGN HORSEPOWER (WHEN INDICATED)

GENERATOR

TRANSFER SWITCH, CURRENT RATING, AND NUMBER OF POLES AS NOTED

ATS – AUTOMATIC
MTS – MANUAL

TRANSFORMER

△ 3–PHASE, 3–WIRE DELTA CONNECTION

Y 3–PHASE, 4–WIRE GROUNDED WYE CONNECTION

SWITCHBOARD OR PANELBOARD; NAME, VOLTAGE, PHASE, NUMBER OF WIRES WHEN INDICATED

NON–MOTOR LOAD WITH DESIGN KVA, KW, OR AMP

CONTROL POWER TRANSFORMER (CPT)

VOLTAGE TRANSFORMER (VT OR PT)

CURRENT TRANSFORMER (CT)

UTILITY WATT–HOUR METER PER UTILITY REQUIREMENTS

DIGITAL METERING PACKAGE

RUN TIME METER

GROUND

LIGHTNING ARRESTER

LOW VOLTAGE SURGE PROTECTIVE DEVICE

ELECTRICAL CONNECTION

NO ELECTRICAL CONNECTION

SOLENOID VALVE

CONTROL/RELAY COIL; X INDICATES TYPE, Y INDICATES LOOP NO. WHEN USED

TYPES:
CR – CONTROL RELAY
DP – DEFINITE PURPOSE RELAY
LC – LIGHTING CONTACTOR
M – MOTOR STARTER
PC – PHOTO CELL
TC – TIME CLOCK
TR – TIMING RELAY

NORMALLY OPEN CONTACT (N.O.)

NORMALLY CLOSED CONTACT (N.C.)

NORMALLY OPEN TIME DELAY RELAY CONTACT WITH TIME DELAY ON CLOSING AFTER COIL IS ENERGIZED

NORMALLY CLOSED TIME DELAY RELAY CONTACT WITH TIME DELAY ON OPENING AFTER COIL IS ENERGIZED

NORMALLY OPEN TIME DELAY RELAY CONTACT WITH TIME DELAY ON OPENING AFTER COIL IS DE–ENERGIZED

NORMALLY CLOSED TIME DELAY RELAY CONTACT WITH TIME DELAY ON CLOSING AFTER COIL IS DE–ENERGIZED

NORMALLY OPEN TEMPERATURE SWITCH; CLOSE ON RISING TEMPERATURE

NORMALLY CLOSED TEMPERATURE SWITCH; OPEN ON RISING TEMPERATURE

NORMALLY OPEN FLOW SWITCH; CLOSE ON INCREASING FLOW

NORMALLY CLOSED FLOW SWITCH; OPEN ON INCREASING FLOW

NORMALLY OPEN LEVEL SWITCH, CLOSE ON RISING LEVEL

NORMALLY CLOSED LEVEL SWITCH, OPEN ON RISING LEVEL

NORMALLY OPEN PRESSURE SWITCH, CLOSE ON INCREASING PRESSURE

NORMALLY CLOSED PRESSURE SWITCH, OPEN ON INCREASING PRESSURE

NORMALLY OPEN LIMIT SWITCH, CLOSE ON REACHING LIMIT

NORMALLY CLOSED LIMIT SWITCH, OPEN ON REACHING LIMIT

FIELD WIRING EXTERNAL TO CONTROL PANEL

INTERLOCK; X INDICATES TYPE

TYPES:
E – ELECTRICAL
M – MECHANICAL
K – KEY

3 POSITION SELECTOR SWITCH, MAINTAINED CONTACTS; UNLESS OTHERWISE NOTED, 2–POSITION SIMILAR

NORMALLY OPEN PUSHBUTTON, MOMENTARY CONTACT UNLESS OTHERWISE NOTED

NORMALLY CLOSED PUSHBUTTON, MOMENTARY CONTACT UNLESS OTHERWISE NOTED

INDICATING LIGHT, X INDICATES LENS COLOR

PUSH TO TEST INDICATING LIGHT, X INDICATES LENS COLOR

LENS COLORS:
R – RED
G – GREEN
B – BLUE
Y – YELLOW
W – WHITE
A – AMBER

TRANSFORMER

SELECTOR SWITCH

PUSHBUTTON

INSTRUMENTATION/CONTROL DEVICE

CONTROL PANEL INTEGRAL OR PROVIDED WITH ASSOCIATED EQUIPMENT

CONTROL PANEL WITH DISCONNECT SWITCH INTEGRAL OR PROVIDED WITH ASSOCIATED EQUIPMENT

JUNCTION OR PULL BOX

PANELBOARD (250V TO 600V)

PANELBOARD (LESS THAN 250V)

ELECTRICAL EQUIPMENT ENCLOSURE: SWITCHBOARD, MOTOR CONTROL CENTER, CONTROL PANEL, OR OTHER EQUIPMENT AS INDICATED

PHOTOCELL

CEILING/PENDANT–MOUNTED LUMINAIRE – HID, COMPACT FLUORESCENT, OR INCANDESCENT

WALL–MOUNTED LUMINAIRE – HID, COMPACT FLUORESCENT, OR INCANDESCENT

CEILING/PENDANT–MOUNTED FLUORESCENT FIXTURE

WALL–MOUNTED FLUORESCENT FIXTURE

CEILING/PENDANT–MOUNTED FLUORESCENT FIXTURE NORMAL/EMERGENCY

WALL–MOUNTED FLUORESCENT FIXTURE NORMAL/EMERGENCY

EMERGENCY LIGHT FIXTURE, 2 ATTACHED HEADS AS SHOWN

EMERGENCY LIGHT, REMOTE MOUNTED HEAD

DOUBLE–FACED CEILING OR WALL–MOUNTED EXIT LIGHT; DIRECTIONAL ARROWS (IF REQUIRED) AS INDICATED ON PLANS

SINGLE–FACED CEILING OR WALL–MOUNTED EXIT LIGHT; DIRECTIONAL ARROWS (IF REQUIRED) AS INDICATED ON PLANS

AREA OR ROADWAY LIGHT – POLE–MOUNTED

LIGHTING FIXTURE SUBSCRIPTS:
X – INDICATES FIXTURE TYPE PER LIGHTING FIXTURE SCHEDULE
Y – INDICATES CIRCUIT NUMBER FROM PANELBOARD
z – INDICATES CONTROLLING SWITCH (IF REQUIRED)

TOGGLE SWITCH

SUBSCRIPTS:
X – INDICATES TYPE
NONE – SINGLE POLE
3 – THREE–WAY
4 – FOUR–WAY
HP – TOGGLE SWITCH, HORSEPOWER RATED
K – KEY SWITCH
TE – MANUAL MOTOR STARTER WITH THERMAL ELEMENT
P – PILOT LIGHT
L – LIGHTED HANDLE
Y – INDICATES CONTROLLING SWITCH (IF REQUIRED)

SPECIAL–PURPOSE RECEPTACLE AS DEFINED ON PLANS

PLUG–IN RECEPTACLE STRIP, QUANTITY AND SPACING OF RECEPTACLES AS NOTED OR SPECIFIED

TELECOMMUNICATIONS OUTLET JUNCTION BOX

QUAD–DUPLEX RECEPTACLE, TWO NEMA 5–20R UNDER COMMON COVER PLATE

DUPLEX RECEPTACLE, NEMA 5–20R

SIMPLEX RECEPTACLE, NEMA 5–20R

SUBSCRIPTS:
X – INDICATES TYPE
GFCI – GROUND FAULT CIRCUIT INTERRUPTER
Y – INDICATES CIRCUIT NUMBER FROM PANELBOARD

CONDUIT TURNING UP

CONDUIT TURNING DOWN

HOME RUN TO PANEL, 2 #12, 1 #12G IN 3/4"C UNLESS OTHERWISE NOTED

CIRCUIT RUN BETWEEN DEVICES EXPOSED IN NON–ARCHITECTURALLY FINISHED AREAS; CONCEALED IN ARCHITECTURALLY FINISHED AREAS. CONDUIT AND CONDUCTOR SIZES SHALL BE THE SAME AS THE HOMERUN FOR THE CIRCUIT.

CONDUIT RUN BETWEEN DEVICES CONCEALED IN NON–ARCHITECTURALLY FINISHED AREAS OR UNDER FLOOR SLAB. CONDUIT AND CONDUCTOR SIZES SHALL BE THE SAME AS THE HOMERUN FOR THE CIRCUIT.

CIRCUIT HASH MARKS (WHEN INDICATED); LONG, SHORT, SINGLE DOT, AND DOUBLE DOT REPRESENT PHASE, NEUTRAL, EQUIPMENT GROUND, AND ISOLATED EQUIPMENT GROUND, RESPECTIVELY. #12 IN 3/4" CONDUIT UNLESS OTHERWISE INDICATED.

CIRCUIT CONTINUATION

CONDUIT STUBBED OUT AND CAPPED

CONDUIT TAG OR CIRCUIT NUMBER – WIRE AND CONDUIT SIZE AS SPECIFIED IN CIRCUIT SCHEDULE ON THE SHEETS

GROUND CABLE

GROUND ROD

FIRE ALARM ANNUNCIATOR

FIRE ALARM CONTROL PANEL

FIRE ALARM MANUAL PULL STATION

FIRE ALARM CONTROL RELAY

FIRE ALARM CONTACT, FLOW SWITCH

FIRE ALARM CONTACT, TAMPER SWITCH

FIRE ALARM CONTACT, PRESSURE SWITCH

SMOKE AND DUCT DETECTOR

SUBSCRIPT:
I – IONIZATION TYPE
P – PHOTOELECTRIC TYPE

HEAT DETECTOR

SUBSCRIPT:
R/C – RATE COMPENSATION
R/F – COMBINATION RATE OF RISE AND FIXED TEMP
R – RATE OF RISE
F – FIXED

ALARM BELL

ALARM HORN

ALARM FLASHING LIGHT

ALARM BELL AND FLASHING LIGHT COMBINATION UNIT

ALARM HORN AND FLASHING LIGHT COMBINATION UNIT

SUBSCRIPT:
NONE – GENERAL ALARM DEVICE
F – FIRE ALARM DEVICE

GENERAL NOTES:

1. THIS IS A STANDARD ELECTRICAL SYMBOLOGY SHEET. NOT ALL SYMBOLS MAY BE USED ON THIS PROJECT.
2. SCREENING OR SHADING OF WORK IS USED TO INDICATE EXISTING COMPONENTS OR TO DE–EMPHASIZE PROPOSED IMPROVEMENTS TO HIGHLIGHT SELECTED TRADE WORK. REFER TO CONTEXT OF EACH SHEET FOR USAGE.
3. SEE P&ID LEGEND SHEET FOR PROJECT–SPECIFIC EQUIPMENT SYMBOLS, EQUIPMENT ABBREVIATIONS, AND PIPING SYSTEM ABBREVIATIONS.

HDR Engineering, Inc.

ISSUE	DATE	DESCRIPTION
0	16FEB2015	ISSUE FOR BID
B	13SEPT2014	FINAL REVIEW
A	23MAY2014	DRAFT REVIEW

PROJECT MANAGER: ALAN ERICKSON
PROJECT NUMBER: –

ELECTRICAL LEGEND SHEET
GILT EDGE SUPERFUND SITE

0 1" 2"

FILENAME: 00E–01
SCALE: NONE
SHEET: **00E-01**

C:\pwworking\d1336476\00E-01.dwg, 2/16/2015 7:10:49 AM, jammille

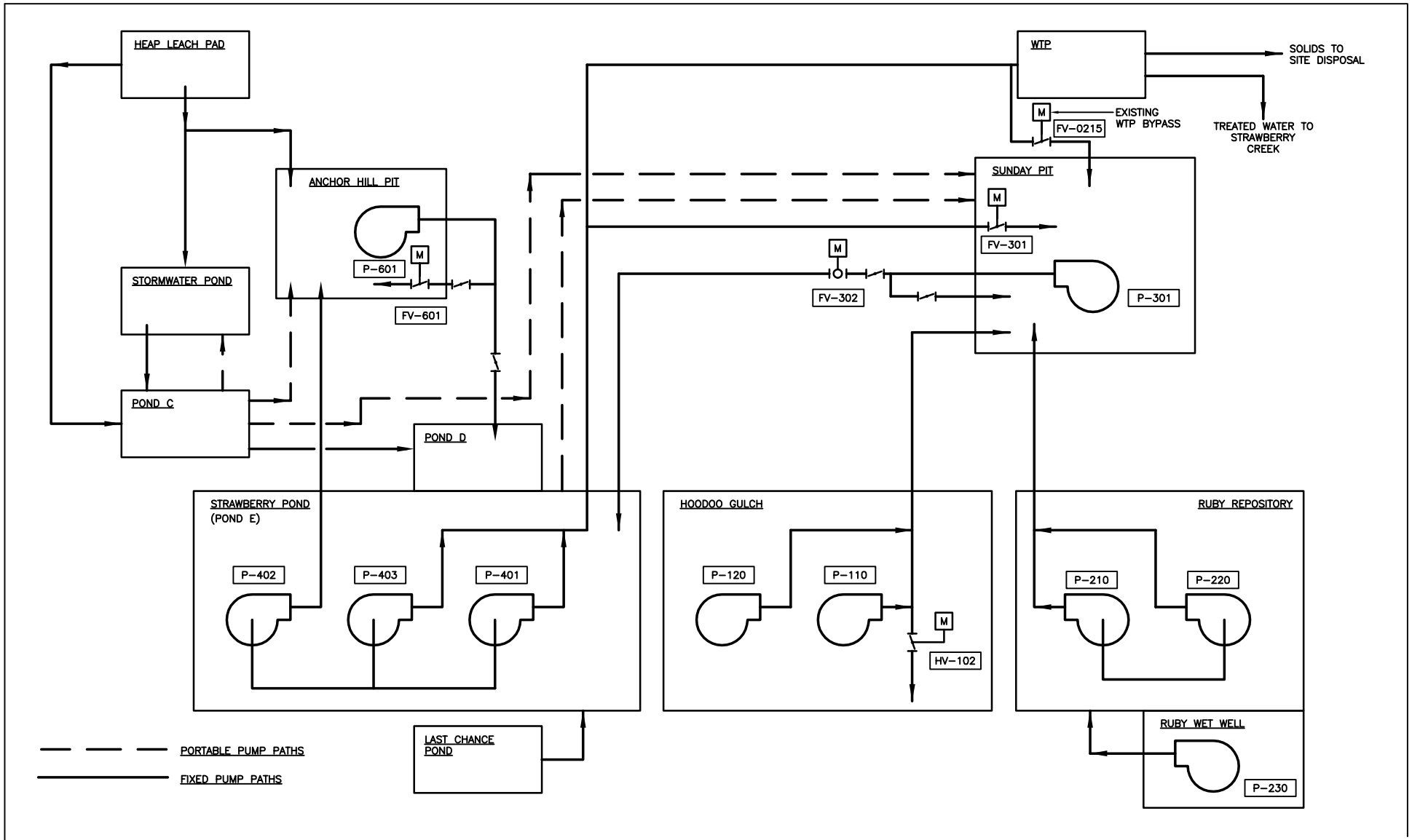

HDR

WATER FLOW DIAGRAM
GILT EDGE SUPERFUND SITE
WATER TRANSPORT

AUTOMATION UPGRADE

DATE
2SEPT2014

FIGURE
SK5/23-01

C:\pwworking\d1336476\FIG01.dwg, 9/13/2014 12:43:25 PM, jammille

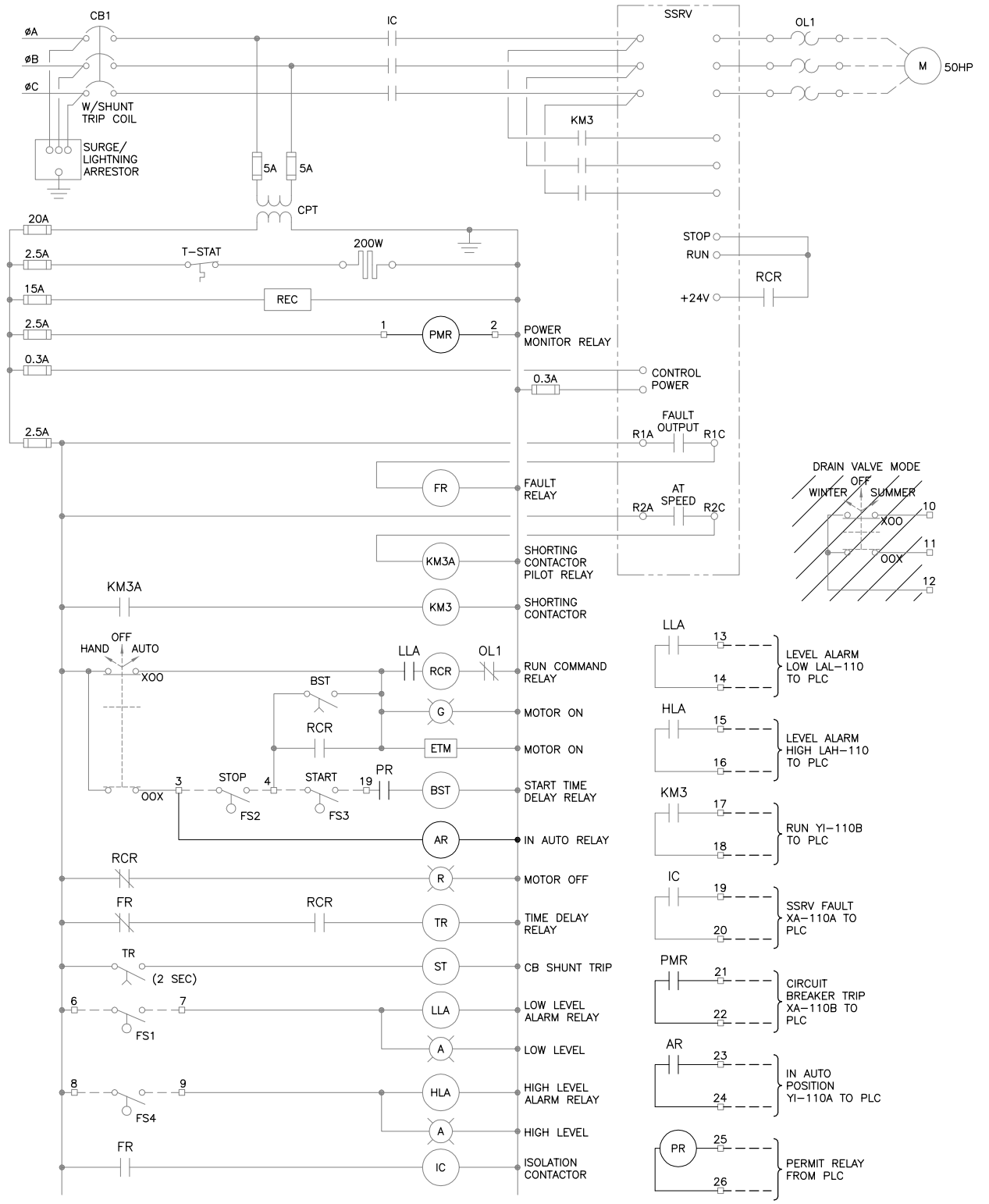

HOODOO GULCH PUMP STATION CONTROL

PUMP 1

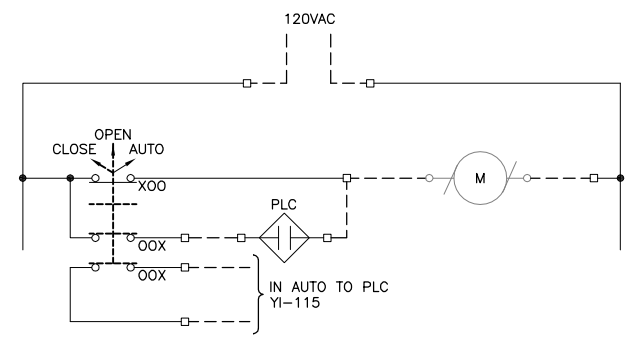

HOODOO GULCH DUMP VALVE CONTROL

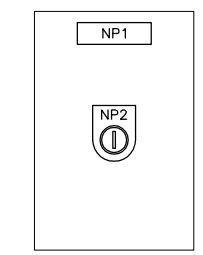

NAMEPLATE SCHEDULE

NP1	DRAIN VALVE FV-102
NP2	CLOSE-OPEN-AUTO

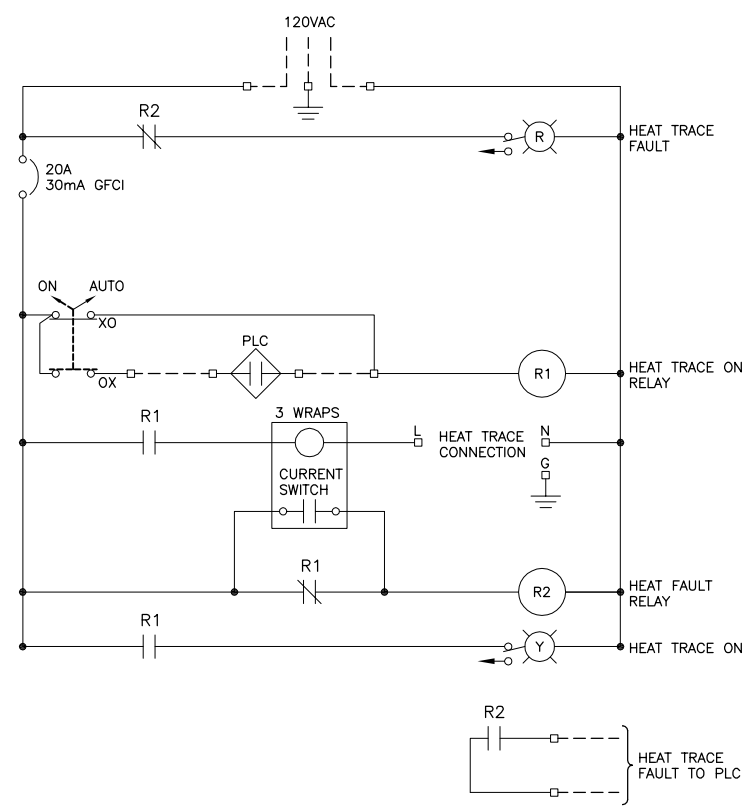

HEAT TRACE CONTROL PANEL

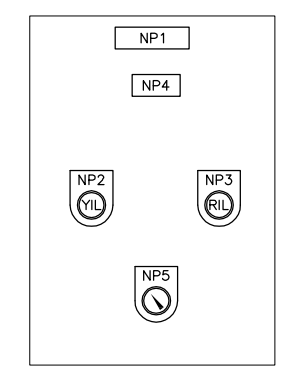

NAMEPLATE SCHEDULE

NP1	HEAT TRACE CONTROL PANEL
NP2	HEAT TRACE ON
NP3	HEAT TRACE FAULT
NP4	GFCI BREAKER INSIDE PANEL
NP5	ON AUTO

This Margin Reserved for Notes
Avoid Drawing in This Area

This Space Reserved for Sub Contractor Logos Do Not Draw in This Area

HDR Engineering, Inc.

ISSUE	DATE	DESCRIPTION
C	16FEB2014	ISSUE FOR BID
B	13SEPT2014	FINAL REVIEW
A	23MAY2014	DRAFT REVIEW

PROJECT MANAGER	ALAN ERICKSON
PROJECT NUMBER	–

PE Stamps

Project Name and Logo

GENERAL ELECTRICAL DIAGRAM
GILT EDGE SUPERFUND SITE

0 1" 2"

FILENAME	00E-02
SCALE	NONE

SHEET **00E-02**

C:\pwworking\d1336476\00E-02.dwg, 2/16/2015 7:11:35 AM, jammille

PRIMARY ELEMENT SYMBOLOGY

- ORIFICE PLATE
- PITOT TUBE OR ANNUBAR
- FI — ROTOMETER
- SONIC OR ULTRASONIC FLOWMETER
- M — MAGNETIC FLOWMETER
- FT — MASS DISPERSION FLOWMETER
- FLUME
- WEIR
- PROPELLER OR TURBINE METER
- VENTURI TUBE
- FLOAT SWITCH
- TE — TEMPERATURE ELEMENT WITH THERMOWELL
- FG — SIGHT FLOW GLASS

LINE TYPES

- MAIN PROCESS LINE
- SECONDARY PROCESS LINE
- AUXILIARY PROCESS LINE
- DIRECTION OF FLOW
- PNEUMATIC SIGNAL
- ELECTRICAL SIGNAL
- HYDRAULIC SIGNAL
- SOFTWARE OR DATA LINK
- SIGNAL CONNECTION
- CROSSOVER – NO CONNECTION
- CAPILLARY

CROSS REFERENCE SYMBOLOGY

- Y–3 — CONTINUATION ON SHEET Y–3
- Y–3 — CONTINUATION ON SHEET Y–3

INSTRUMENT SYMBOLOGY

- LOCALLY MOUNTED FIELD INSTRUMENTATION
- MOUNTED ON PANEL FRONT
- MOUNTED INSIDE PANEL
- XXX — FRONT PANEL MOUNTED ON AUXILIARY PANEL (SUBSCRIPT INDICATES PANEL)
- MOUNTED INSIDE AUXILIARY PANEL
- PILOT LIGHT
- INSTRUMENT FUNCTIONS SHARING COMMON HOUSING
- COMPLEX INTERLOCK AS DEFINED IN CONTROL DIAGRAM OR IN SPECIFICATIONS
- SHARED DISPLAY, SHARED CONTROL, FIELD MOUNTED
- SHARED DISPLAY, SHARED CONTROL, PRIMARY LOCATION – NORMALLY ACCESSIBLE TO OPERATOR
- PROGRAMMABLE LOGIC CONTROL, PRIMARY LOCATION – NORMALLY ACCESSIBLE TO OPERATOR
- PROGRAMMABLE LOGIC CONTROL, FIELD MOUNTED

ACTUATOR SYMBOLOGY

- X — OPERATOR ABBREVIATIONS:
  M = MOTOR
  P = PNEUMATIC
  S = SOLENOID
- FLOAT OPERATOR
- SPRING–OPPOSED SINGLE–ACTING PNEUMATIC CYLINDER
- DOUBLE–ACTING PNEUMATIC CYLINDER
- PNEUMATIC DIAPHRAGM
- PNEUMATIC DIAPHRAGM WITH POSITIONER

TYPES OF POWER SUPPLY

A	PLANT COMPRESSED AIR
IA	INSTRUMENTATION AIR
ES	ELECTRIC SUPPLY
NG	NATURAL GAS
HYD	HYDRAULIC

INSTRUMENT IDENTIFICATION LETTERS

	FIRST LETTER		SUCCEEDING LETTERS		
	MEASURED OR INITIATING VARIABLE	MODIFIER	READOUT OR PASSIVE FUNCTION	OUTPUT FUNCTION	MODIFIER
A	ANALYSIS		ALARM		
B	BURNER, COMBUSTION		USER'S CHOICE	USER'S CHOICE	USER'S CHOICE
C	USERS CHOICE			CONTROL	CLOSED
D	USERS CHOICE	DIFFERENTIAL			
E	VOLTAGE		SENSOR (PRIMARY ELEMENT)		
F	FLOW RATE	RATIO (FRACTION)			
G	USER'S CHOICE		GLASS, VIEWING DEVICE		
H	HAND				HIGH
I	CURRENT (ELECTRICAL)		INDICATE		
J	POWER	SCAN			
K	TIME, TIME SCHEDULE	TIME; RATE OF CHANGE		CONTROL STATION	
L	LEVEL		LIGHT		LOW
M	USER'S CHOICE	MOMENTARY			MIDDLE, INTERMEDIATE
N	USER'S CHOICE		USER'S CHOICE	USER'S CHOICE	USER'S CHOICE
O	USER'S CHOICE		ORIFICE, RESTRICTION		
P	PRESSURE, VACUUM		POINT (TEST) CONNECTION		
Q	QUANTITY	INTEGRATE, TOTALIZE			
R	RADIATION		RECORD		
S	SPEED, FREQUENCY	SAFETY		SWITCH	
T	TEMPERATURE			TRANSMIT	
U	MULTIVARIABLE		MULTIFUNCTION	MULTIFUNCTION	MULTIFUNCTION
V	VIBRATION, MECH. ANALYSIS			VALVE, DAMPER, LOUVER	
W	WEIGHT, FORCE		WELL		
X	UNCLASSIFIED	X AXIS	UNCLASSIFIED	UNCLASSIFIED	UNCLASSIFIED
Y	EVENT, STATE OR PRESENCE	Y AXIS		RELAY, COMPUTE, CONVERT	
Z	POSITION, DIMENSION	Z AXIS		DRIVER, ACTUATOR, UNCLASSIFIED FINAL CONTROL ELEMENT	

MISCELLANEOUS INSTRUMENTATION ABBREVIATIONS

AI	ANALOG INPUT
AO	ANALOG OUTPUT
CL2	CHLORINE (ANALYZER MODIFIER)
CO	CARBON MONOXIDE (ANALYZER MODIFIER)
CO2	CARBON DIOXIDE (ANALYZER MODIFIER)
COMB	COMBUSTIBLES (ANALYZER MODIFIER)
COND	CONDUCTIVITY (ANALYZER MODIFIER)
DEN	DENSITY (ANALYZER MODIFIER)
DI	DIGITAL INPUT
DO	DIGITAL OUTPUT
DO	DISSOLVED OXYGEN (ANALYZER MODIFIER)
E/P	VOLTAGE TO PNEUMATIC
H2S	HYDROGEN SULFIDE (ANALYZER MODIFIER)
HCL	HYDROGEN CHLORIDE (ANALYZER MODIFIER)
I/O	INPUT/OUTPUT
I/P	CURRENT TO PNEUMATIC
NOX	NITROGEN OXIDE (ANALYZER MODIFIER)
OI	OPERATOR INTERFACE
O2	OXYGEN (ANALYZER MODIFIER)
P&ID	PROCESS AND INSTRUMENTATION DIAGRAM
SS	SUSPENDED SOLIDS (ANALYZER MODIFIER)
TURB	TURBIDITY (ANALYZER MODIFIER)
WAN	WIDE AREA NETWORK

CONTROL SWITCH NOTATION ABBREVIATIONS

XXX / XXXX — XXX

ACK	ACKNOWLEDGE
ESTOP	EMERGENCY STOP
FAIL	FAILURE
FOR	FORWARD–OFF–REVERSE
FR	FORWARD–REVERSE
FS	FAST–SLOW
HA	HAND–AUTO
HOA	HAND–OFF–AUTO
HOR	HAND–OFF–REMOTE
LL	LEAD–LAG
LLS	LEAD–LAG–STANDBY
LOR	LOCAL–OFF–REMOTE
LR	LOCAL–REMOTE
LS	LEAD–STANDBY
MA	MANUAL–AUTO
OAC	OPEN–AUTO–CLOSE
OC	OPEN–CLOSE
OO	ON–OFF
OSC	OPEN–STOP–CLOSE
RJ	RUN–JOG
RJR	RUN–JOG–REVERSE
SIL	SILENCE
SS	START–STOP

VALVES

- BALL VALVE
- BUTTERFLY VALVE
- CONE VALVE
- CHECK VALVE
- DOUBLE–DISK CHECK VALVE
- BALL CHECK VALVE
- DIAPHRAGM VALVE
- GATE VALVE
- GLOBE VALVE
- KNIFE GATE VALVE
- NEEDLE VALVE
- PINCH VALVE
- PLUG VALVE
- THREE–WAY BALL VALVE
- THREE–WAY PLUG VALVE
- PRESSURE–REDUCING VALVE
- PRESSURE–REGULATING VALVE
- THREE–WAY CONTROL VALVE
- OR — PRESSURE–RELIEF VALVE
- X — AIR–RELEASE VACUUM VALVE
  A = AIR RELEASE
  VAC = VACUUM

MISCELLANEOUS SYMBOLOGY

GENERAL NOTES:

1. THIS IS A STANDARD INSTRUMENTATION SYMBOLOGY AND ABBREVIATIONS SHEET. LISTING OF SYMBOLS AND ABBREVIATIONS DOES NOT IMPLY ALL SYMBOLS AND ABBREVIATIONS HAVE BEEN USED ON THIS PROJECT.
2. SEE PROCESS, MECHANICAL AND PLUMBING LEGEND SHEET FOR MISCELLANEOUS PIPING SYMBOLS.
3. SCREENING OR SHADING OF WORK IS USED TO INDICATE EXISTING COMPONENTS OR TO DE–EMPHASIZE PROPOSED IMPROVEMENTS TO HIGHLIGHT SELECTED TRADE WORK. REFER TO CONTEXT OF EACH SHEET FOR USAGE.
4. VALVE SYMBOLS SHOWN HERE ARE APPLICABLE ONLY TO INSTRUMENTATION DIAGRAMS. SEE PROCESS, MECHANICAL AND PLUMBING LEGEND SHEET FOR VALVE SYMBOLS USED ELSEWHERE ON THE SHEETS.

HDR
HDR Engineering, Inc.

ISSUE	DATE	DESCRIPTION
0	16FEB2015	ISSUE FOR BID
B	13SEPT2014	FINAL REVIEW
A	23MAY2014	DRAFT REVIEW

PROJECT MANAGER	ALAN ERICKSON
PROJECT NUMBER	–

PROCESS & INSTRUMENTATION DIAGRAM
GILT EDGE SUPERFUND SITE
INSTRUMENTATION LEGEND

0 1" 2"

FILENAME	00Y–01
SCALE	NONE

SHEET **00Y-01**

C:\pwworking\d1336476\00Y-01.dwg, 2/16/2015 7:12:19 AM, jammille

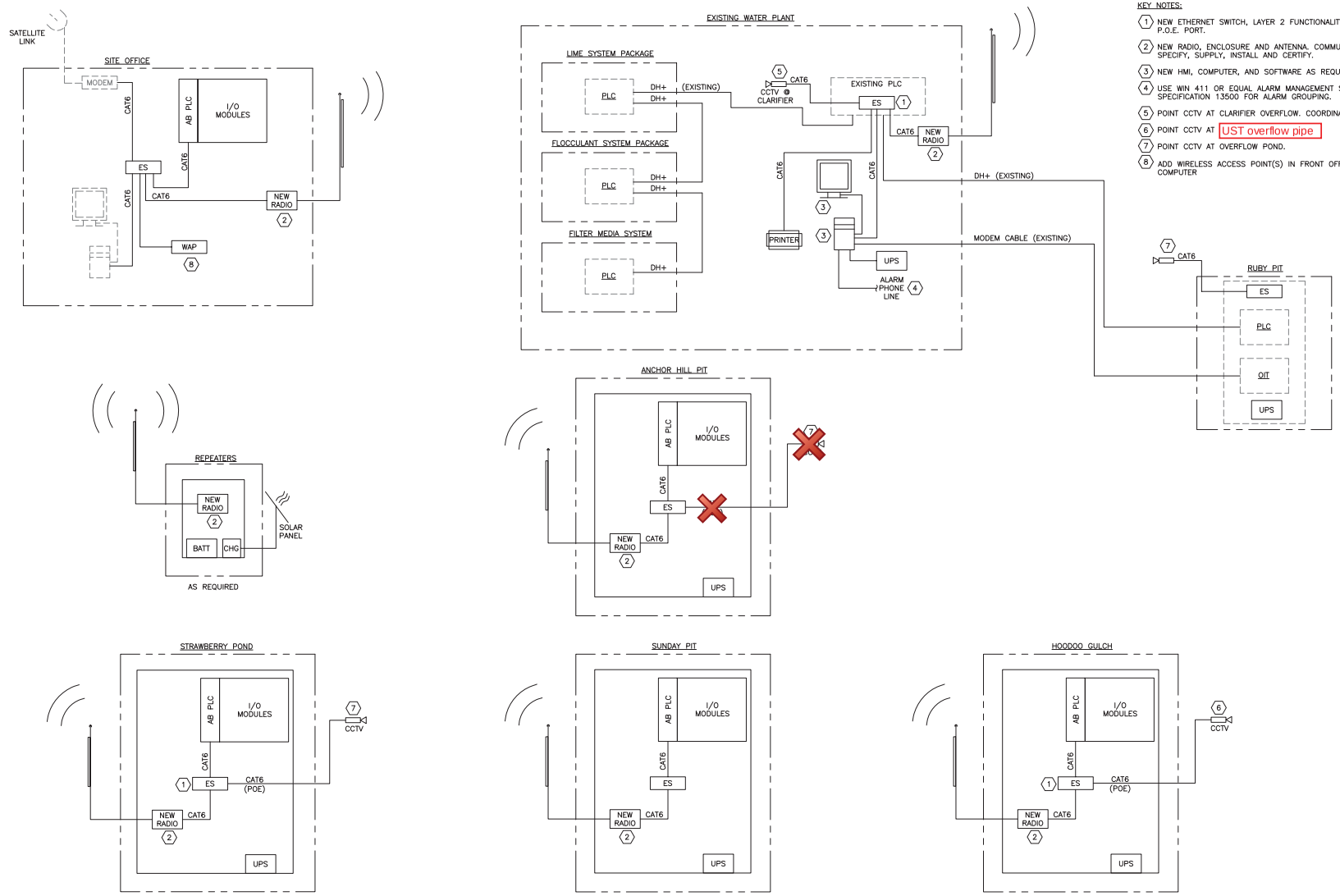

KEY NOTES:

1. NEW ETHERNET SWITCH, LAYER 2 FUNCTIONALITY WITH AT LEAST ONE P.O.E. PORT.
2. NEW RADIO, ENCLOSURE AND ANTENNA. COMMUNICATIONS VENDOR TO SPECIFY, SUPPLY, INSTALL AND CERTIFY.
3. NEW HMI, COMPUTER, AND SOFTWARE AS REQUIRED.
4. USE WIN 411 OR EQUAL ALARM MANAGEMENT SOFTWARE. SEE SPECIFICATION 13500 FOR ALARM GROUPING.
5. POINT CCTV AT CLARIFIER OVERFLOW. COORDINATE WITH THE OWNER.
6. POINT CCTV AT UST overflow pipe
7. POINT CCTV AT OVERFLOW POND.
8. ADD WIRELESS ACCESS POINT(S) IN FRONT OFFICE FOR NEW PROCESS COMPUTER

HDR
HDR Engineering, Inc.

ISSUE	DATE	DESCRIPTION
0	16FEB2015	ISSUE FOR BID
B	13SEPT2014	FINAL REVIEW
A	23MAY2014	DRAFT REVIEW

PROJECT MANAGER	ALAN ERICKSON
PROJECT NUMBER	–

RADIO COMMUNICATION DIAGRAM
GILT EDGE MINE SUPERFUND SITE
PLC DATA AND VIDEO

0 1" 2"

FILENAME	–
SCALE	NONE

SHEET **00Y-02**

C:\pwworking\d1336476\00Y-02.dwg, 2/16/2015 7:12:50 AM, jammille

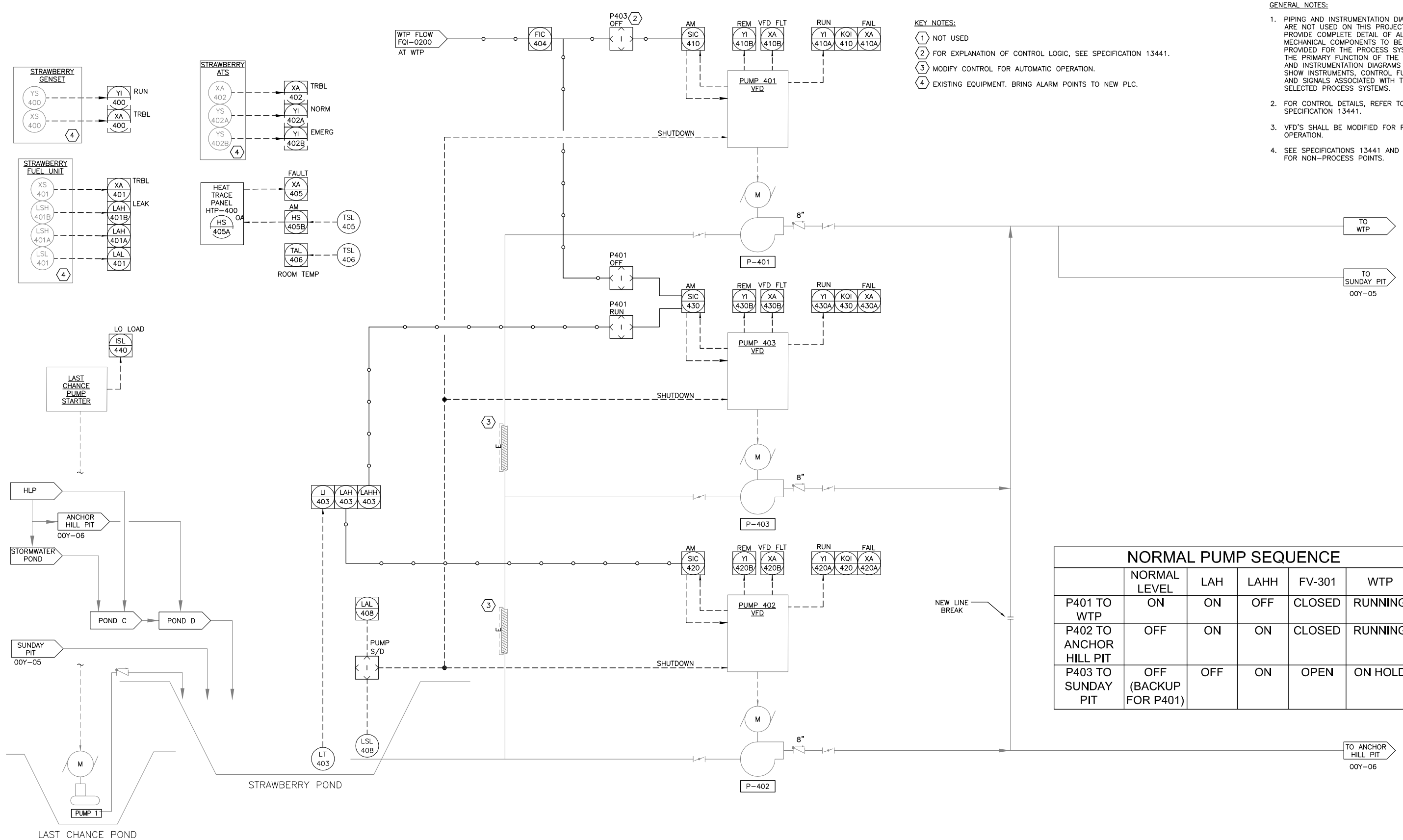

KEY NOTES:

1. NOT USED
2. FOR EXPLANATION OF CONTROL LOGIC, SEE SPECIFICATION 13441.
3. MODIFY CONTROL FOR AUTOMATIC OPERATION.
4. EXISTING EQUIPMENT. BRING ALARM POINTS TO NEW PLC.

GENERAL NOTES:

1. PIPING AND INSTRUMENTATION DIAGRAMS ARE NOT USED ON THIS PROJECT TO PROVIDE COMPLETE DETAIL OF ALL MECHANICAL COMPONENTS TO BE PROVIDED FOR THE PROCESS SYSTEMS. THE PRIMARY FUNCTION OF THE PIPING AND INSTRUMENTATION DIAGRAMS IS TO SHOW INSTRUMENTS, CONTROL FUNCTIONS AND SIGNALS ASSOCIATED WITH THE SELECTED PROCESS SYSTEMS.
2. FOR CONTROL DETAILS, REFER TO SPECIFICATION 13441.
3. VFD'S SHALL BE MODIFIED FOR REMOTE OPERATION.
4. SEE SPECIFICATIONS 13441 AND 13500 FOR NON-PROCESS POINTS.

NORMAL PUMP SEQUENCE

	NORMAL LEVEL	LAH	LAHH	FV-301	WTP
P401 TO WTP	ON	ON	OFF	CLOSED	RUNNING
P402 TO ANCHOR HILL PIT	OFF	ON	ON	CLOSED	RUNNING
P403 TO SUNDAY PIT	OFF (BACKUP FOR P401)	OFF	ON	OPEN	ON HOLD

HDR Engineering, Inc.

ISSUE	DATE	DESCRIPTION
0	16FEB2015	ISSUE FOR BID
B	13SEPT2014	FINAL REVIEW
A	23MAY2014	DRAFT REVIEW

PROJECT MANAGER: ALAN ERICKSON
PROJECT NUMBER: –

PROCESS & INSTRUMENTATION DIAGRAM
GILT EDGE SUPERFUND SITE
STRAWBERRY POND PUMP STATION

0 1" 2"

FILENAME: 00Y-03
SCALE: NONE
SHEET: **00Y-03**

C:\pwworking\d1336476\00Y-03.dwg, 2/16/2015 7:13:12 AM, jammille

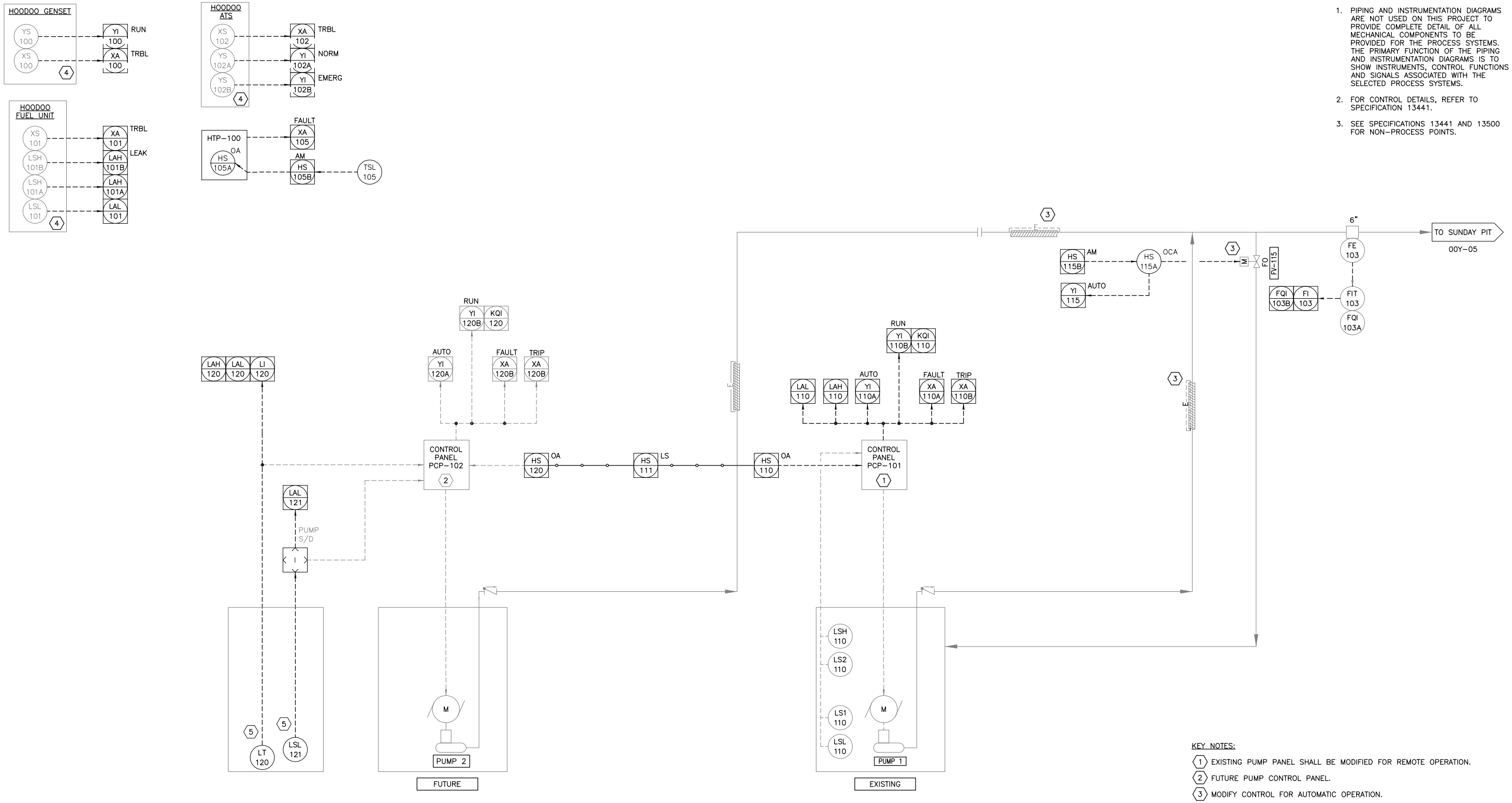

GENERAL NOTES:

1. PIPING AND INSTRUMENTATION DIAGRAMS ARE NOT USED ON THIS PROJECT TO PROVIDE COMPLETE DETAIL OF ALL MECHANICAL COMPONENTS TO BE PROVIDED FOR THE PROCESS SYSTEMS. THE PRIMARY FUNCTION OF THE PIPING AND INSTRUMENTATION DIAGRAMS IS TO SHOW INSTRUMENTS, CONTROL FUNCTIONS AND SIGNALS ASSOCIATED WITH THE SELECTED PROCESS SYSTEMS.
2. FOR CONTROL DETAILS, REFER TO SPECIFICATION 13441.
3. SEE SPECIFICATIONS 13441 AND 13500 FOR NON-PROCESS POINTS.

KEY NOTES:

1. EXISTING PUMP PANEL SHALL BE MODIFIED FOR REMOTE OPERATION.
2. FUTURE PUMP CONTROL PANEL.
3. MODIFY CONTROL FOR AUTOMATIC OPERATION.
4. EXISTING EQUIPMENT. BRING ALARM POINTS TO NEW PLC.
5. INSTALL LT-120 AND LSL-121 IN NEW STILLING WELL. CONNECT TO PLC.

HDR Engineering, Inc.

ISSUE	DATE	DESCRIPTION
0	16FEB2015	ISSUE FOR BID
B	13SEPT2014	FINAL REVIEW
A	23MAY2014	DRAFT REVIEW

PROJECT MANAGER	ALAN ERICKSON
PROJECT NUMBER	–

PROCESS & INSTRUMENTATION DIAGRAM
GILT EDGE SUPERFUND SITE
HOODOO GULCH PUMP STATION

0 1" 2"

FILENAME	–
SCALE	NONE

SHEET **00Y-04**

C:\pwworking\d1336476\00Y-04.dwg, 2/16/2015 7:13:35 AM, jammille

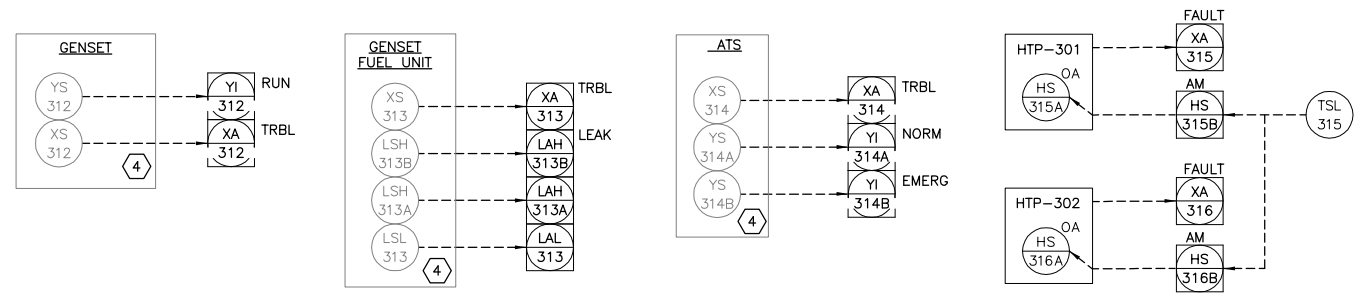

GENERAL NOTES:

1. PIPING AND INSTRUMENTATION DIAGRAMS ARE NOT USED ON THIS PROJECT TO PROVIDE COMPLETE DETAIL OF ALL MECHANICAL COMPONENTS TO BE PROVIDED FOR THE PROCESS SYSTEMS. THE PRIMARY FUNCTION OF THE PIPING AND INSTRUMENTATION DIAGRAMS IS TO SHOW INSTRUMENTS, CONTROL FUNCTIONS AND SIGNALS ASSOCIATED WITH THE SELECTED PROCESS SYSTEMS.
2. FOR CONTROL DETAILS, REFER TO SPECIFICATION 13441.
3. AS
4. SEE SPECIFICATIONS 13441 AND 13500 FOR NON-PROCESS POINTS.

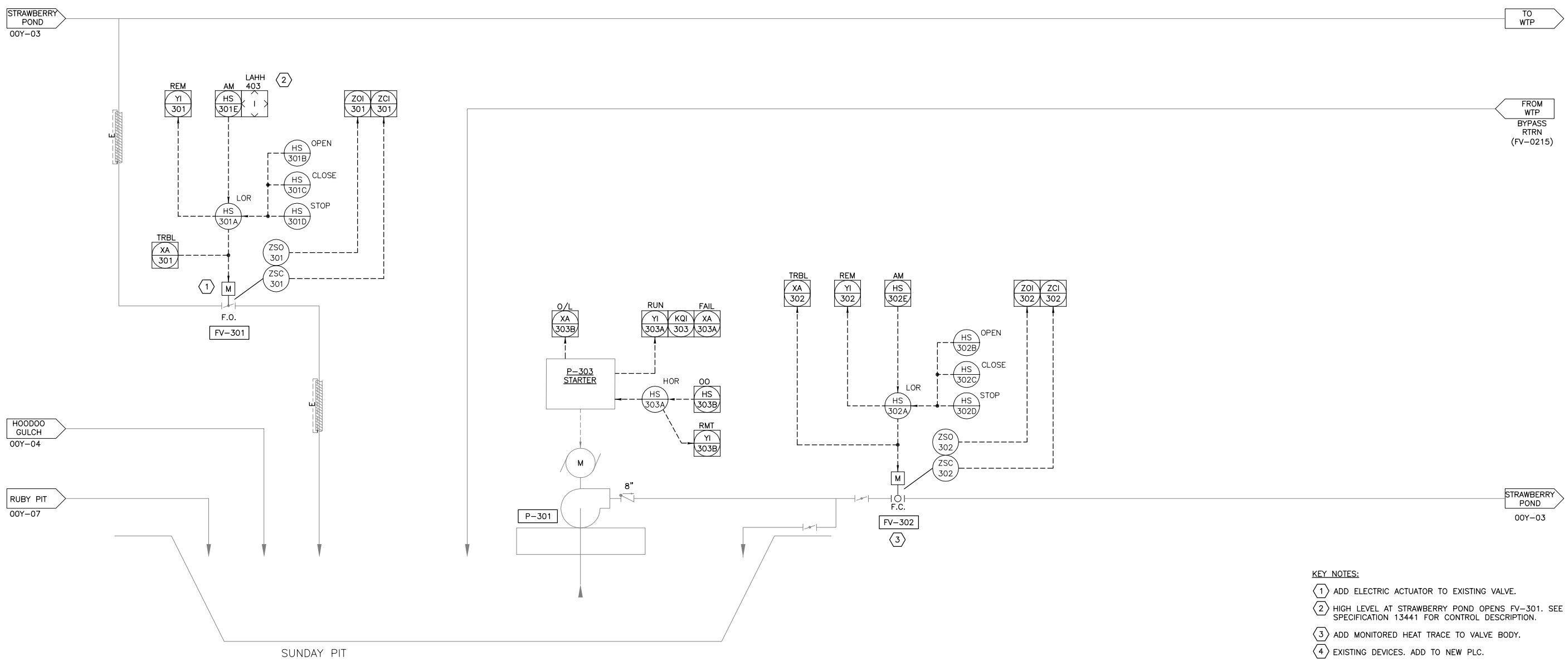

KEY NOTES:

1. ADD ELECTRIC ACTUATOR TO EXISTING VALVE.
2. HIGH LEVEL AT STRAWBERRY POND OPENS FV-301. SEE SPECIFICATION 13441 FOR CONTROL DESCRIPTION.
3. ADD MONITORED HEAT TRACE TO VALVE BODY.
4. EXISTING DEVICES. ADD TO NEW PLC.

HDR Engineering, Inc.

ISSUE	DATE	DESCRIPTION
0	16FEB2015	ISSUE FOR BID
B	13SEPT2014	FINAL REVIEW
A	23MAY2014	DRAFT REVIEW

PROJECT MANAGER	ALAN ERICKSON
PROJECT NUMBER	–

PROCESS & INSTRUMENTATION DIAGRAM
GILT EDGE SUPERFUND SITE
SUNDAY PIT

0 1" 2"

FILENAME	00Y-05
SCALE	NONE
SHEET	00Y-05

C:\pwworking\d1336476\00Y-05.dwg, 2/16/2015 7:14:04 AM, jammille

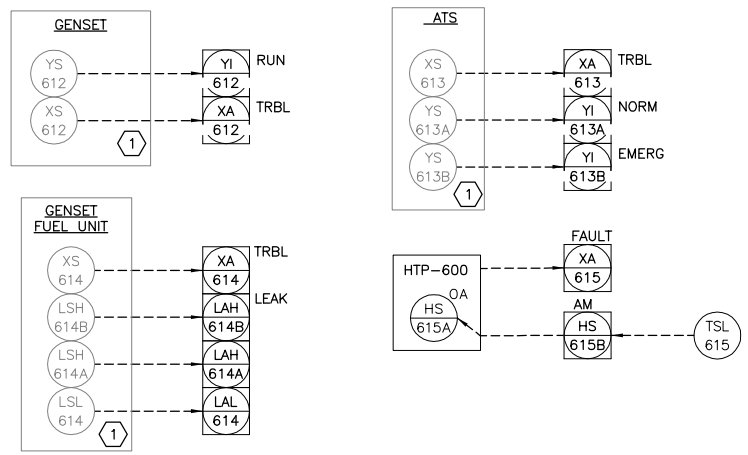

GENERAL NOTES:

1. PIPING AND INSTRUMENTATION DIAGRAMS ARE NOT USED ON THIS PROJECT TO PROVIDE COMPLETE DETAIL OF ALL MECHANICAL COMPONENTS TO BE PROVIDED FOR THE PROCESS SYSTEMS. THE PRIMARY FUNCTION OF THE PIPING AND INSTRUMENTATION DIAGRAMS IS TO SHOW INSTRUMENTS, CONTROL FUNCTIONS AND SIGNALS ASSOCIATED WITH THE SELECTED PROCESS SYSTEMS.
2. FOR CONTROL DETAILS, REFER TO SPECIFICATION 13441.
3. SEE SPECIFICATIONS 13441 AND 13500 FOR NON-PROCESS POINTS.

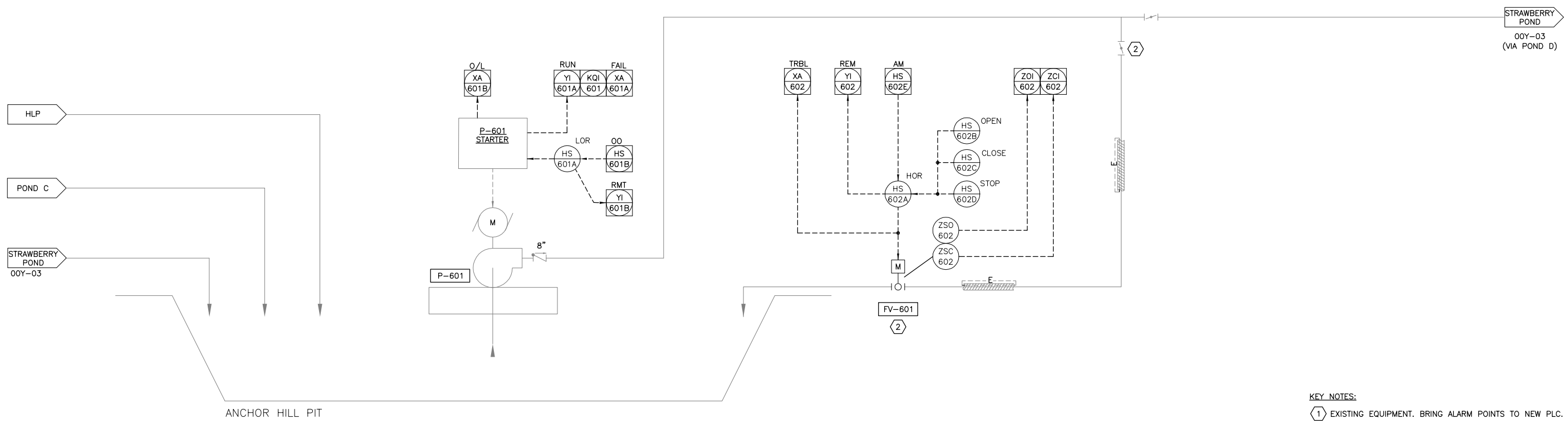

KEY NOTES:

1. EXISTING EQUIPMENT. BRING ALARM POINTS TO NEW PLC.
2. HEAT TRACE VALVE ALONG WITH LINE.

HDR Engineering, Inc.

ISSUE	DATE	DESCRIPTION
0	16FEB2015	ISSUE FOR BID
B	13SEPT2014	FINAL REVIEW
A	23MAY2014	DRAFT REVIEW

PROJECT MANAGER	ALAN ERICKSON
PROJECT NUMBER	–

PROCESS & INSTRUMENTATION DIAGRAM
GILT EDGE SUPERFUND SITE
ANCHOR HILL PIT

0 1" 2"

FILENAME	00Y-06
SCALE	NONE

SHEET **00Y-06**

C:\pwworking\d1336476\00Y-06.dwg, 2/16/2015 7:14:29 AM, jammille

GENERAL NOTES:

1. PIPING AND INSTRUMENTATION DIAGRAMS ARE NOT USED ON THIS PROJECT TO PROVIDE COMPLETE DETAIL OF ALL MECHANICAL COMPONENTS TO BE PROVIDED FOR THE PROCESS SYSTEMS. THE PRIMARY FUNCTION OF THE PIPING AND INSTRUMENTATION DIAGRAMS IS TO SHOW INSTRUMENTS, CONTROL FUNCTIONS AND SIGNALS ASSOCIATED WITH THE SELECTED PROCESS SYSTEMS.
2. FOR CONTROL DETAILS, REFER TO SPECIFICATION 13441.
3. SEE SPECIFICATIONS 13441 AND 13500 FOR NON-PROCESS POINTS.
4. LIGHT LINES INDICATE EXISTING DEVICES.

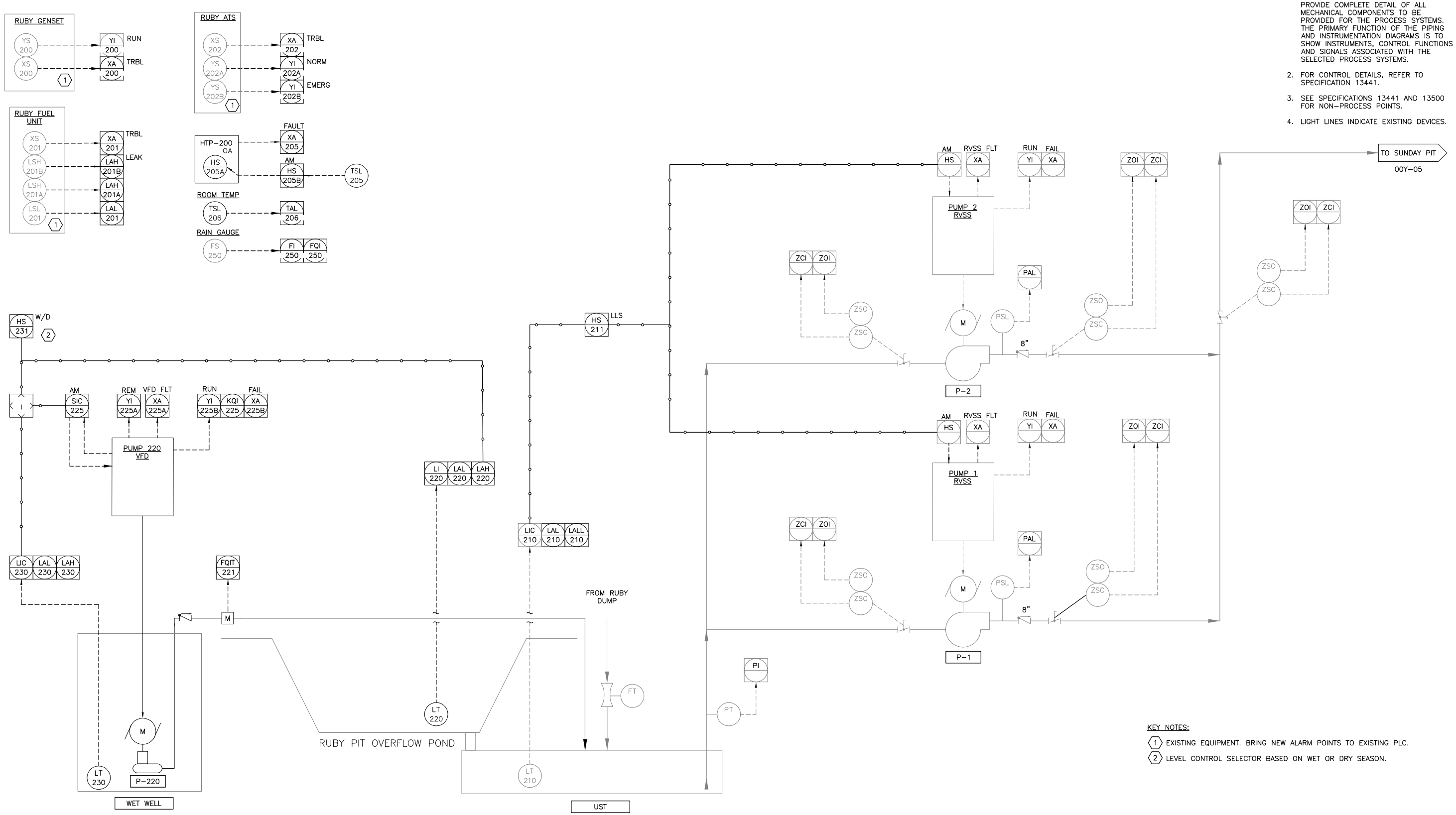

KEY NOTES:

1. EXISTING EQUIPMENT. BRING NEW ALARM POINTS TO EXISTING PLC.
2. LEVEL CONTROL SELECTOR BASED ON WET OR DRY SEASON.

HDR

HDR Engineering, Inc.

ISSUE	DATE	DESCRIPTION
0	16FEB2015	ISSUE FOR BID
B	13SEPT2014	FINAL REVIEW
A	23MAY2014	DRAFT REVIEW

PROJECT MANAGER	ALAN ERICKSON
PROJECT NUMBER	–

PROCESS & INSTRUMENTATION DIAGRAM
GILT EDGE SUPERFUND SITE
RUBY REPOSITORY

0 1" 2"

FILENAME	00Y-07
SCALE	NONE

SHEET **00Y-07**

C:\pwworking\d1336476\00Y-07.dwg, 2/16/2015 7:14:55 AM, jammille

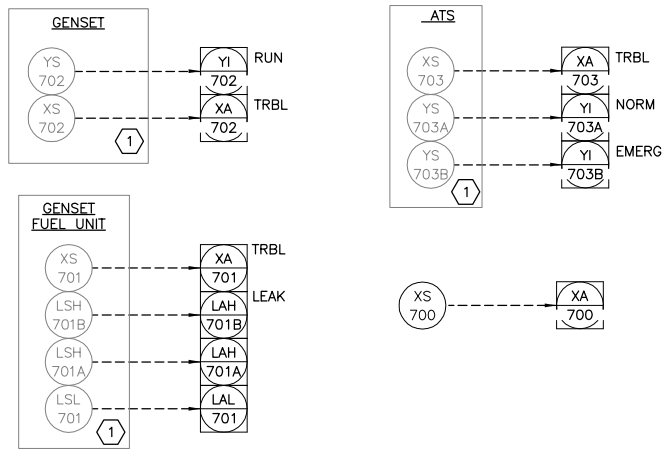

GENERAL NOTES:

1. PIPING AND INSTRUMENTATION DIAGRAMS ARE NOT USED ON THIS PROJECT TO PROVIDE COMPLETE DETAIL OF ALL MECHANICAL COMPONENTS TO BE PROVIDED FOR THE PROCESS SYSTEMS. THE PRIMARY FUNCTION OF THE PIPING AND INSTRUMENTATION DIAGRAMS IS TO SHOW INSTRUMENTS, CONTROL FUNCTIONS AND SIGNALS ASSOCIATED WITH THE SELECTED PROCESS SYSTEMS.
2. FOR CONTROL DETAILS, REFER TO SPECIFICATION 13441.
3. SEE SPECIFICATIONS 13441 AND 13500 FOR NON-PROCESS POINTS.
4. LIGHT LINES INDICATE EXISTING DEVICES.

KEY NOTES:

(1) EXISTING EQUIPMENT. BRING ALARM POINTS TO NEW PLC.

HDR Engineering, Inc.

ISSUE	DATE	DESCRIPTION
0	16FEB2015	ISSUE FOR BID
A	15FEB2015	DWG CREATED

PROJECT MANAGER	ALAN ERICKSON
PROJECT NUMBER	–

PROCESS & INSTRUMENTATION DIAGRAM
GILT EDGE SUPERFUND SITE
OFFICE AREA

0 1" 2"

FILENAME	00Y-08
SCALE	NONE

SHEET **00Y-08**

C:\pwworking\d1336476\00Y-08.dwg, 2/16/2015 7:15:22 AM, jammille

GENERAL INSTRUMENT OR FUNCTION SYMBOLS

PRIMARY LOCATION NORMALLY ACCESSIBLE TO OPERATOR | FIELD MOUNTED | AUXILIARY LOCATION NORMALLY ACCESSIBLE TO OPERATOR

DISCRETE INSTRUMENTS

SHARED DISPLAY,

PROGRAMMABLE LOGIC CONTROL

NORMALLY INACCESSIBLE OR BEHIND-THE-PANEL DEVICES OR FUNCTIONS MAY BE DEPICTED BY USING THE SAME SYMBOL BUT WITH DASHED HORIZONTAL BARS, I.E.:

INSTRUMENTS SHARING COMMON HOUSING

DENOTES EQUIPMENT SPECIFIED OR MODIFIED UNDER OTHER SECTIONS OF THIS CONTRACT

DENOTES EXISTING EQUIPMENT OR EQUIPMENT PROVIDED BY OTHERS UNDER A SEPARATE CONTRACT

FUTURE EQUIPMENT

CONTROL INTERLOCK FUNCTION, SOFTWARE OR HARDWIRED. SEE DESCRIPTION PROVIDED, ELECTRICAL SCHEMATIC, AND/OR SYSTEM SPECIFICATIONS FOR SPECIFIC FUNCTION.

12 — DETAIL NUMBER, IF USED

DIGITAL SYSTEM I/O INTERFACE. DIRECTION OF TRIANGLE DENOTES WHETHER INPUT OR OUTPUT

NOTE:
QUANTITY OF INPUTS AND OUTPUTS IS DEPENDENT UPON THE NUMBER OF DEVICES OR PIECES OF EQUIPMENT THAT ARE BEING CONTROLLED AND/OR MONITORED. THIS QUANTITY SHALL BE DETERMINED BY THE SUFFIX OF THE LOOP NUMBER. FOR EXAMPLE, LOOP NO. 1100-01,02,03 REQUIRES 3 ANALOG INPUTS (1 INPUT FOR EACH FLOW METER).

LETTER DENOTES SIGNAL TYPE. THE LETTER "A" DENOTES AN ANALOG SIGNAL. THE LETTER "D" DENOTES A DISCRETE SIGNAL.

OR A — LOGIC "OR" SYMBOL. MAY ALSO BE SUBSTITUTED WITH "AND" DEPICTING A LOGIC "AND" SYMBOL.

TYPICAL TAG NUMBERS AND DESIGNATION

1234 — TYPICAL LOOP NUMBER

AE *A CL_2

WHEN USED, LETTER DISTINGUISHES BETWEEN MULTIPLE, SIMILAR DEVICES IN THE SAME INSTRUMENT LOOP.

ADDITIONAL INSTRUMENT IDENTIFICATION SEE FUNCTION SYMBOLS AND ABBREVIATIONS

WHEN USED, NUMBER DENOTES DEVICES IN IDENTICAL DUPLICATE SYSTEMS.

VALVE CODES

V114-01 – GATE VALVE
V122-03 – KNIFE GATE
V341-03 – CHECK VALVE
V421-01 – BALL VALVE
V922-02 – BUTTERFLY VALVE

VALVE ACTUATOR SYMBOLS

AUTOMATIC POSITIONER

VALVE OR GATE ACTUATOR WITH * DEFINED AS FOLLOWS:
P: AIR CYLINDER
S: SOLENOID
P/O: AIR/OIL CYLINDER
E: ELECTRIC MOTOR
H: HYDRAULIC CYLINDER
EH: ELECTROHYDRAULIC
Z: POSITIONER

FOR PRESSURE RELIEF OR SAFETY VALVES ONLY

NO SYMBOL

OR — MANUALLY (HAND) OPERATED

PROCESS DEVICE SYMBOLS

THREADED DIAPHRAGM SEAL
CONCENTRIC FLANGE MOUNTED DIAPHRAGM SEAL
BUBBLER SYSTEM
PURGE OR FLUSHING DEVICE
PRIMARY ELEMENT INLINE VENTURI TUBE
PRIMARY ELEMENT INSERT VENTURI TUBE
PRIMARY ELEMENT MAGNETIC FLOWMETER
RUPTURE DISK (PRESSURE RELIEF)
PRIMARY ELEMENT ULTRASONIC FLOWMETER
PRIMARY ELEMENT PARSHALL FLUME OR TRAPEZOIDAL FLUME
PRIMARY ELEMENT ORIFICE PLATE
PRIMARY ELEMENT WEIR FLOWMETER
PRIMARY ELEMENT TURBINE OR PROPELLER TYPE METER
PRIMARY ELEMENT ULTRASONIC FLOW OR LEVEL METER
FLOAT SWITCH
DRAIN
CHEMICAL INJECTION POINT
STATIC MIXER
ARV — AIR RELIEF VALVE
REDUCER
IN-LINE AIR FILTER

REGULATED SIDE — SELF CONTAINED PRESSURE REGULATING VALVE
GATE VALVE
GLOBE VALVE
BALL VALVE
BUTTERFLY VALVE
CHECK VALVE
PLUG VALVE
UNCLASSIFIED GATE
PINCH VALVE
POSITIVE DISPLACEMENT PUMP
AIR COMPRESSOR
USED FOR ALL CENTRIFUGAL, DIAPHRAGM, ROTARY LOBE, OR PROGRESSIVE CAVITY PUMP TYPES.
VERTICAL WET PIT
SUBMERSIBLE PUMP
MIXER
DC MOTOR
MOTOR – MAY BE ELECTRIC, HYDRAULIC OR PNEUMATIC. ARROW DENOTES VARIABLE SPEED OR MODULATING VALVE.
SC — SELF CONTAINED CONTROL VALVE
PRESSURE RELIEF VALVE
FLEXIBLE COUPLING

GENERAL NOTES

1. THIS IS A GENERAL LEGEND SHEET. SOME SYMBOLS AND ABBREVIATIONS MAY NOT APPLY TO THIS SPECIFIC PROJECT.
2. THIS LEGEND APPLIES TO INSTRUMENTATION DIAGRAMS ONLY AND MAY DIFFER FROM LEGENDS FOR OTHER SHEETS.
3. IN GENERAL THIS LEGEND SHEET AND THE INSTRUMENTATION DIAGRAMS ARE BASED ON INSTRUMENT SOCIETY OF AMERICA, STANDARDS FOR PRACTICES FOR INSTRUMENTATION. SOME MODIFICATIONS, ADDITIONS AND ALTERATIONS HAVE BEEN MADE AS REQUIRED TO ACCOMMODATE THE PROJECT REQUIREMENTS.
4. SOME PROCESS ITEMS, SUCH AS EQUIPMENT ISOLATION VALVES, BYPASS LINES, ETC., WHICH ARE NOT CRITICAL FOR AN UNDERSTANDING OF THE INSTRUMENTATION FUNCTIONS ARE NOT SHOWN ON THE INSTRUMENTATION SHEETS.
5. SEE ELECTRICAL SHEETS AND SPECIFICATIONS FOR ADDITIONAL CONTROL AND INTERLOCK REQUIREMENTS FOR EQUIPMENT NOT SHOWN OR NOT PROVIDED BY THE INSTRUMENTATION SUPPLIER.
6. IN THE EVENT OF DISCREPANCY BETWEEN THE PROCESS AND INSTRUMENTATION DIAGRAMS AND THE LOOP DIAGRAMS, THE INFORMATION FROM THE LOOP DIAGRAMS SHALL BE USED.
7. IN THE EVENT OF DISCREPANCIES BETWEEN THE PROCESS AND INSTRUMENTATION DIAGRAMS, THE LOOP DIAGRAMS, AND THE SPECS, THE MORE EXPENSIVE SOLUTION OR ALTERNATIVE SHALL BE USED FOR PRICING PURPOSES. THE ENGINEER SHALL MAKE FINAL DETERMINATION OF WHICH SOLUTION SHALL BE USED TO IMPLEMENT THE PROJECT.

LINE SYMBOLS

MAJOR PROCESS PIPING, FLOW CHANNEL OR DATA HIGHWAY WITH FLOW OR SIGNAL DIRECTION AS SHOWN.
MINOR PROCESS PIPING WITH FLOW DIRECTION AS SHOWN
MISCELLANEOUS PIPING AS SHOWN
EXISTING PIPING OR EXISTING EQUIPMENT
BUILDING OR ENCLOSURE
FUTURE PIPING OR FUTURE EQUIPMENT
ELECTRIC OR ELECTRONIC SIGNAL WITH SIGNAL DIRECTION AS SHOWN
EXISTING ELECTRIC OR ELECTRONIC SIGNAL WITH SIGNAL DIRECTION AS SHOWN
SOFTWARE SIGNAL LINK (LOOP DWGS)
10 MBPS ETHERNET CABLE CONNECTION (SYS ARCH DWG)
100 MBPS ETHERNET CABLE CONNECTION
FO — FIBER OPTIC CABLE (FOE – FIBER ETHERNET)
RADIO/TELEPHONE LINK
HYDRAULIC SIGNAL
PNEUMATIC SIGNAL
PROC A — PROCESS OR SIGNAL LINE CONTINUED AT / FROM ANOTHER LOCATION (MATCH LETTERS)

FUNCTION SYMBOLS AND ABBREVIATIONS

k PROPORTIONAL GAIN OR ATTENUATE (INPUT:OUTPUT)
-k REVERSE PROPORTIONAL GAIN OR ATTENUATE (INPUT:OUTPUT)
Σ SUMMING
Σ/n AVERAGING
Δ SUBTRACTING
√ EXTRACT SQUARE ROOT
÷ DIVIDE
x MULTIPLY
∫ INTEGRATE
+ BIAS POSITIVE
– BIAS NEGATIVE
F(x) NONLINEAR OR UNSPECIFIED FUNCTION
> HIGH SELECT
< LOW SELECT
⊳ HIGH LIMIT
⊲ LOW LIMIT
/ SIGNAL TRANSDUCER OR CONVERTER (INPUT/OUTPUT) * DEFINED AS FOLLOWS:
E – VOLTAGE H – HYDRAULIC
I – CURRENT O – ELECTROMAGNETIC, SONIC
P – PNEUMATIC R – RESISTANCE (ELECTRIC)
PD – PULSE DURATION

CHEMICAL ABBREVIATIONS – STANDARD CHEMICAL FORMULAS ARE USED.

GENERAL ABBREVIATIONS

A/M	AUTO/MANUAL	FLP	FAIL LAST POSITION	OL	OVERLOAD
AS	AIR SUPPLY	FNIC	FIBER NETWORK INTERFACE CARD	OWS	OPERATOR WORKSTATION
ASC	AIR SCOUR	FO	FAIL OPEN	PC	PERSONAL COMPUTER
BFU	BALLASTED FLOCCULATION UNIT	FOC	FIBER OPTIC CABLE	pH	HYDROGEN ION CONCENTRATION
COND	CONDUCTIVITY	FOM	FIBER OPTIC MODEM	PLC	PROGRAMMABLE LOGIC CONTROLLER
CPU	CENTRAL PROCESSOR UNIT	FREQ	FREQUENCY	PMU	POWER MONITOR UNIT
DCU	DISTRIBUTED CONTROL UNIT	FW	FILTER WATER	PS	POWER SUPPLY
DO	DISSOLVED OXYGEN	HMI	HUMAN MACHINE INTERFACE	PWS	PLANT WATER SYSTEM
DUR	DURATION	HSTDBY	HOT STANDBY	RAS	RETURN ACTIVATED SLUDGE
EFF	EFFLUENT	I/O	INPUT/OUTPUT	RCP	RELAY CONTROL PANEL
ES	ELECTRIC SUPPLY	INF	INFLUENT	RIO	REMOTE INPUT/OUTPUT RACK
FC	FAIL CLOSED	LIO	LOCAL INPUT/OUTPUT RACK	RIOD	REMOTE I/O DROP MODULE
FCC	FILTER CONTROL CONSOLE	MALF	MALFUNCTION	RIOH	REMOTE I/O HEAD MODULE
FCP	FILTER CONTROL PANEL	MC	MOTOR CONTROLLER	RTU	REMOTE TERMINAL UNIT
		MCC	MOTOR CONTROL CENTER	SCFM	CUBIC FEET/MINUTE
		ML	MIXED LIQUOR	SP	SETPOINT
		NC	NORMALLY CLOSED	S/S	START/STOP
		NO	NORMALLY OPEN	TURB	TURBIDITY
				uP	MICROPROCESSOR
				UPS	UNINTERUPTABLE POWER SUPPLY
				VFD	VARIABLE FREQUENCY DRIVE
				VSD	VARIABLE SPEED DRIVE
				WAS	WASTE ACTIVATED SLUDGE
				WBW	WASTE BACK WASH

MEANINGS OF IDENTIFICATION LETTERS

THIS TABLE APPLIES ONLY TO THE FUNCTIONAL IDENTIFICATION OF INSTRUMENTS.

	FIRST LETTER		SUCCEEDING LETTERS		
	MEASURED OR INITIATING VARIABLE	MODIFIER	READOUT OR PASSIVE FUNCTION	OUTPUT FUNCTION	MODIFIER
A	ANALYSIS		ALARM		
B	BURNER, COMBUSTION		EMERGENCY	USER'S CHOICE	USER'S CHOICE
C	USER'S CHOICE			CONTROL	
D	DENSITY (MASS) OR SPECIFIC GRAVITY	DIFFERENTIAL			
E	VOLTAGE (EMF)		PRIMARY ELEMENT		
F	FLOW RATE	RATIO (FRACTION)			
G	USER'S CHOICE		GLASS		
H	HAND (MANUALLY INITIATED)				HIGH OR OPEN
I	CURRENT (ELECTRICAL)		INDICATE		
J	POWER	SCAN			
K	TIME OR TIME SCHEDULE	TIME RATE OF CHANGE		CONTROL STATION	
L	LEVEL		LIGHT (PILOT)		LOW OR CLOSED
M	MOTOR	MOMENTARY			MIDDLE OR INTERMEDIATE
N	USER'S CHOICE		USER'S CHOICE	USER'S CHOICE	USER'S CHOICE
O	USER'S CHOICE		ORIFICE (RESTRICTION)		
P	PRESSURE OR VACUUM		POINT (TEST CONNECTION)		
Q	QUANTITY	INTEGRATE OR TOTALIZE			
R	RUN / RADIATION		RECORD		
S	SPEED OR FREQUENCY	SAFETY		SWITCH	
T	TEMPERATURE			TRANSMIT	
U	MULTIVARIABLE		MULTIFUNCTION	MULTIFUNCTION	MULTIFUNCTION
V	VISCOSITY, VIBRATION			VALVE, DAMPER OR LOUVER	
W	WEIGHT OR FORCE		WELL		
X	UNCLASSIFIED	X AXIS	UNCLASSIFIED	UNCLASSIFIED	UNCLASSIFIED
Y	EVENT, STATE OR PRESENCE	Y AXIS		RELAY, COMPUTE, CONVERT	
Z	POSITION, DIMENSION	Z AXIS		DRIVE, ACTUATE OR UNCLASSIFIED CONTROL ELEMENT	

HAND SWITCH ABBREVIATIONS

A/H AUTO/HAND
F/R FORWARD/REVERSE
H/O/A HAND/OFF/AUTO
L/A LOCAL/AUTO
L/C LOCAL/COMPUTER
L/O/C LOCAL/OFF/COMPUTER
L/O/R LOCAL/OFF/REMOTE
L/R LOCAL/REMOTE
N/B NORMAL/BYPASS
O/C OPEN/CLOSE
O/C/LOS OPEN/CLOSE/LOCK-OUT-STOP
O/C/S OPEN/CLOSE/STOP
O/C/S/C OPEN/CLOSE/STOP/COMPUTER
O/H/C OPEN/HOLD/CLOSE
O/O ON/OFF (MAINTAINED)
O/O/A ON/OFF/AUTO
O/O/C ON/OFF/COMPUTER
R/S/L RAISE/STOP/LOWER
S/R/S START/RESUME/STOP
S/S START/STOP (MOMENTARY)

THIS DOCUMENT ORIGINALLY SEALED AND ISSUED BY TIM VanOSTRAND (Professional Engineer) (LICENSE No. 7763) ON 18/09/02. THIS MEDIA SHOULD NOT BE CONSIDERED A CERTIFIED DOCUMENT.

AS-BUILT DRAWING

ISS	D/M/Y	APP	ISSUED FOR
E	24/2/03	GSB	ISSUED FOR 100% DESIGN SUBMITTAL
D	7/1/03	GSB	ISSUED FOR E & I CONTRACT PROCUREMENT
C	31/10/02	G.S.B.	ISSUED FOR 90% SUBMITTAL TO EPA
B	8/8/02		FOR 90% DESIGN SUBMITTAL
A	4/7/02	W.M.	FOR 90% DESIGN SUBMITTAL

REV. NO.	DATE	DRWN	CHKD	REMARKS

ISS	D/M/Y	APP	ISSUED FOR
A	04/07/02		ISSUED FOR 90% DESIGN SUBMITTAL
B	08/08/02		ISSUED FOR 90% DESIGN SUBMITTAL
C	31/10/02		ISSUED FOR 90% SUBMITTAL TO EPA
D	07/01/03		ISSUED FOR E & I CONTRACT PROCUREMENT
E	24/2/03		ISSUED FOR 100% DESIGN SUBMITTAL
F	01/11/04		REVISION FOR AS-BUILT SUBMITTAL

REF	NUMBER	TITLE	REF	NUMBER	TITLE

APPROVED FOR CONSTRUCTION

CLIENT PROJECT MGR.	DEPARTMENT MGR.	PROJECT MGR.
SCALE NTS	DRN. E.PINTER	01/05/02
	DSN. D.LEE	29/04/02
	BY	D/M/Y

PROJECT No. U7250
ACTIVITY No. 3500
PACKAGE CODE

PROJECT PHASE: TREATMENT PLANT CONVERSION
AREA: EFFLUENT TREATMENT
DRAWING NO. D-U7250-100-N-0006
REV. E

amec

DESIGNED BY: D.LEE
DRAWN BY: E.PINTER
SHEET CHK'D BY:
CROSS CHK'D BY:
APPROVED BY:
DATE: SEP 18/02

CDM Federal Programs Corporation

GILT EDGE MINE SITE
CONVERTED EFFLUENT TREATMENT
PROCESS & INSTRUMENTATION DIAGRAM SHT.1

PROJECT NO.
FILE NAME: 100N0006.dwg
SHEET NO. I-1

CADD FILE ADDRESS

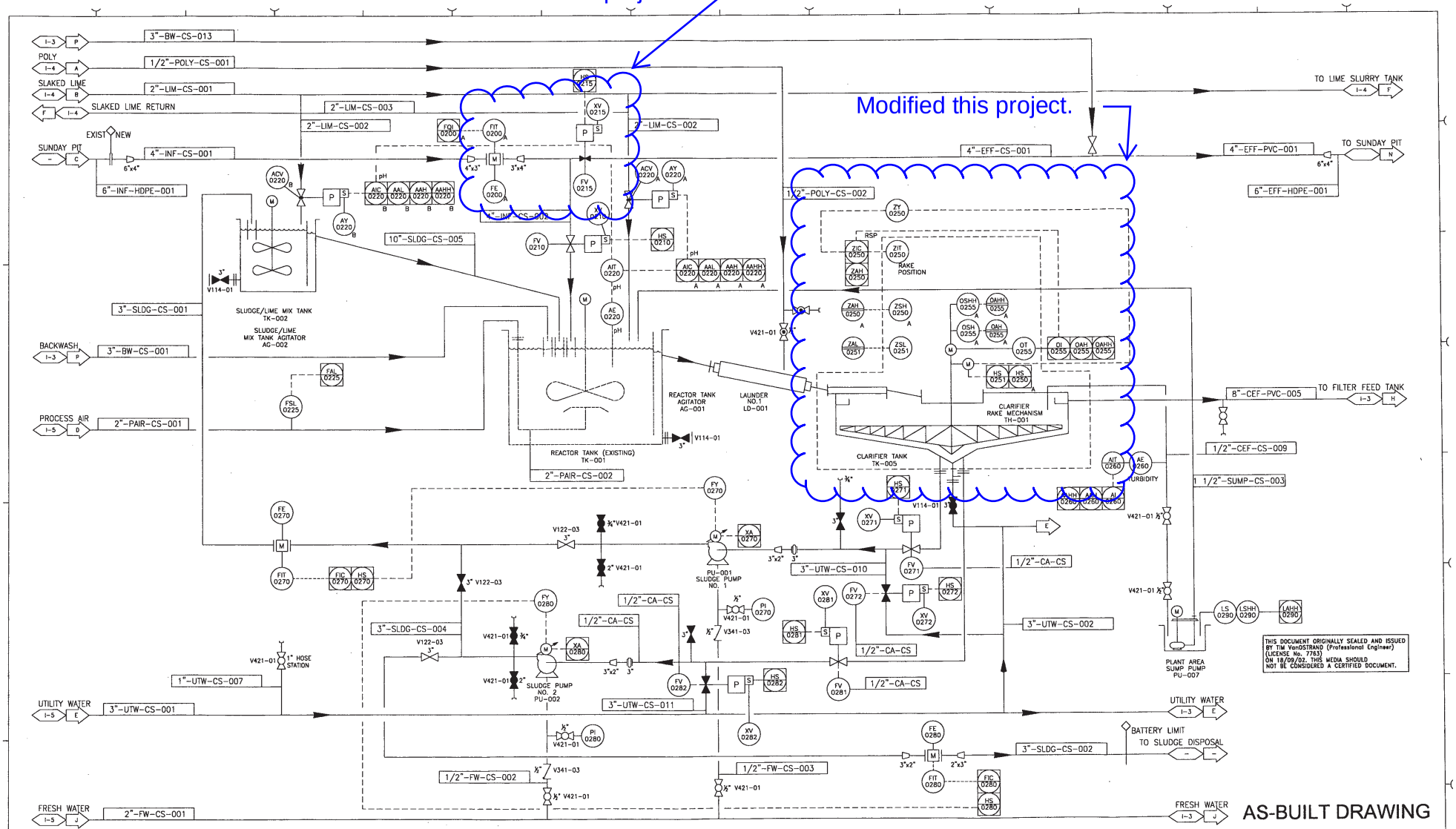

ISS	D/M/Y	APP	ISSUED FOR
G	07/01/03		ISSUED FOR E & I CONTRACT PROCUREMENT
H	24/2/03		ISSUED FOR 100% DESIGN SUBMITTAL
I	01/11/04		REVISION FOR AS-BUILT SUBMITTAL

ISS	D/M/Y	APP	ISSUED FOR
A	01/05/02		ISSUED FOR 65% DESIGN SUBMITTAL
B	12/06/02		ISSUED FOR 65% DESIGN SUBMITTAL
C	04/07/02		ISSUED FOR 90% DESIGN SUBMITTAL
D	08/08/02		ISSUED FOR 90% DESIGN SUBMITTAL
E			ISSUED FOR 90% DESIGN SUBMITTAL
F	31/10/02		ISSUED FOR 90% SUBMITTAL TO EPA

REF	NUMBER	TITLE	REF	NUMBER	TITLE

REV. NO.	DATE	DRWN	CHKD	REMARKS
H	24/2/03	GSB		FOR 100% DESIGN SUBMITTAL

DESIGNED BY: D.LEE
DRAWN BY: E.PINTER
SHEET CHK'D BY: D.MCLEOD
CROSS CHK'D BY:
APPROVED BY:
DATE: SEP 18/02

CDM Federal Programs Corporation

APPROVED FOR CONSTRUCTION

CLIENT PROJECT MGR.	DEPARTMENT MGR.	PROJECT MGR.
SCALE NTS	DRN. E. PINTER	01/05/02
	DSN. D. LEE	29/04/02
	BY	D/M/Y

PROJECT No. U7250
ACTIVITY No. 3600
PACKAGE CODE
PROJECT PHASE: TREATMENT PLANT CONVERSION
AREA: EFFLUENT TREATMENT
DRAWING NO. D-U7250-100-N-0002
REV. H

amec

GILT EDGE MINE SITE
CONVERTED EFFLUENT TREATMENT
PIPING & INSTRUMENTATION DIAGRAM SHT.2

PROJECT NO.
FILE NAME: 10DND002.dwg
SHEET NO. I-2

CADD FILE ADDRESS

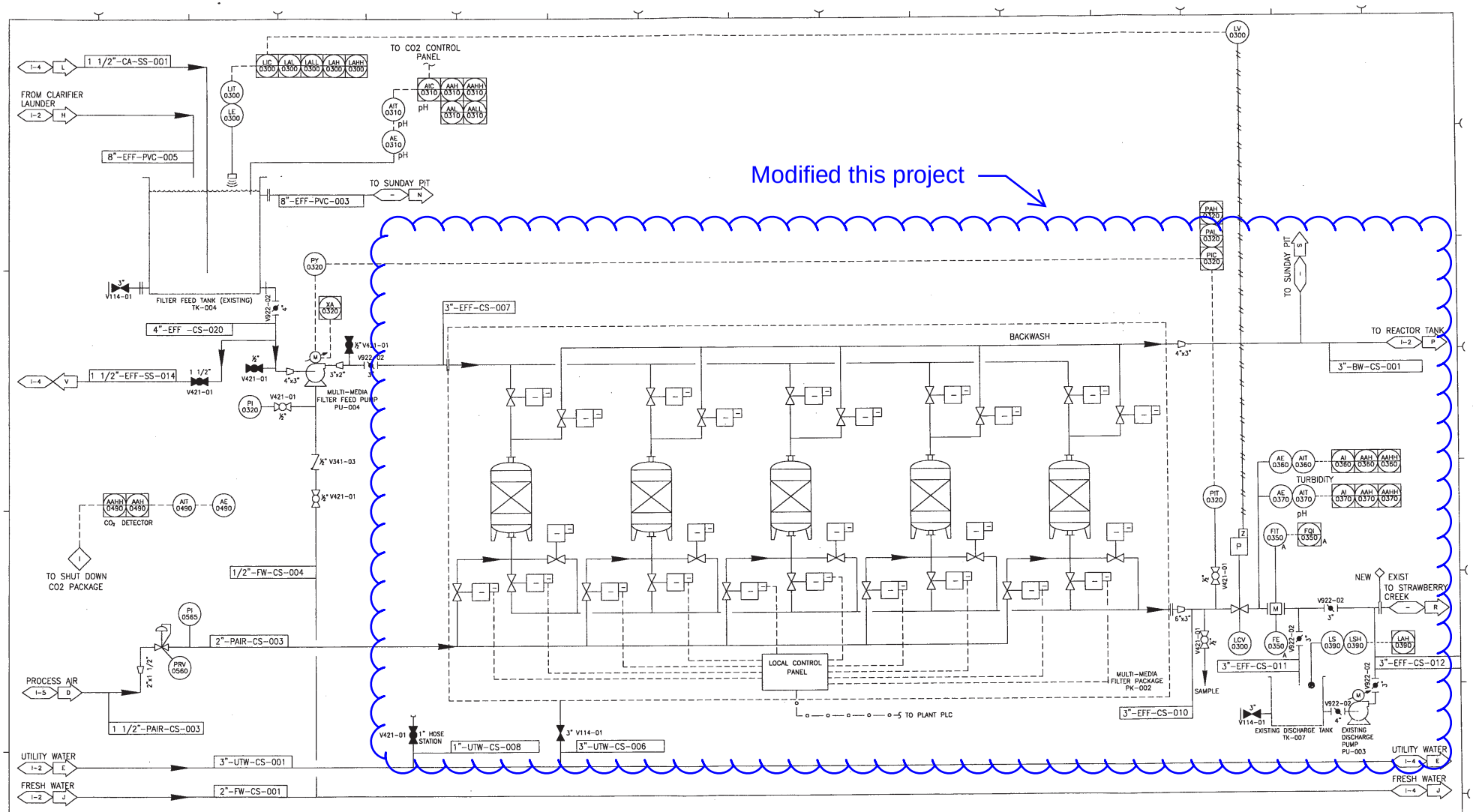

AS-BUILT DRAWING

ISS	D/M/Y	APP	ISSUED FOR
G	24/3/03		ISSUED FOR 100% DESIGN SUBMITTAL
H	29/4/03		REVISION
I	01/11/04		REVISION FOR AS-BUILT SUBMITTAL

ISS	D/M/Y	APP	ISSUED FOR
A	31/05/02		ISSUED FOR 65% DESIGN SUBMITTAL
B	12/06/02		ISSUED FOR 65% DESIGN SUBMITTAL
C	24/07/02		ISSUED FOR 90% DESIGN SUBMITTAL
D	28/08/02		ISSUED FOR 90% DESIGN SUBMITTAL
E	31/10/02		ISSUED FOR 90% SUBMITTAL TO EPA
F	07/01/03		ISSUED FOR E & I CONTRACT PROCUREMENT

REF	NUMBER	TITLE	REF	NUMBER	TITLE

REV. NO.	DATE	DRWN	CHKD	REMARKS

DESIGNED BY:
DRAWN BY:
SHEET CHK'D BY:
CROSS CHK'D BY:
APPROVED BY:
DATE:

CDM Federal Programs Corporation

APPROVED FOR CONSTRUCTION

CLIENT PROJECT MGR.	DEPARTMENT MGR.	PROJECT MGR.
SCALE NTS	DRN. E. PINTER	03/05/02
	DSN. D. LEE	29/04/02
	BY	D/M/Y

PROJECT No.	U7250
ACTIVITY No.	3600
PACKAGE CODE	
PROJECT PHASE	TREATMENT PLANT CONVERSION
AREA	EFFLUENT TREATMENT
DRAWING NO.	D-U7250-100-N-0003
REV.	H

amec

GILT EDGE MINE SITE
CONVERTED EFFLUENT TREATMENT
PIPING & INSTRUMENTATION DIAGRAM SHT.3

PROJECT NO.
FILE NAME: 100N0003.dwg

SHEET NO.
I-3

CADD FILE ADDRESS

Modified this project

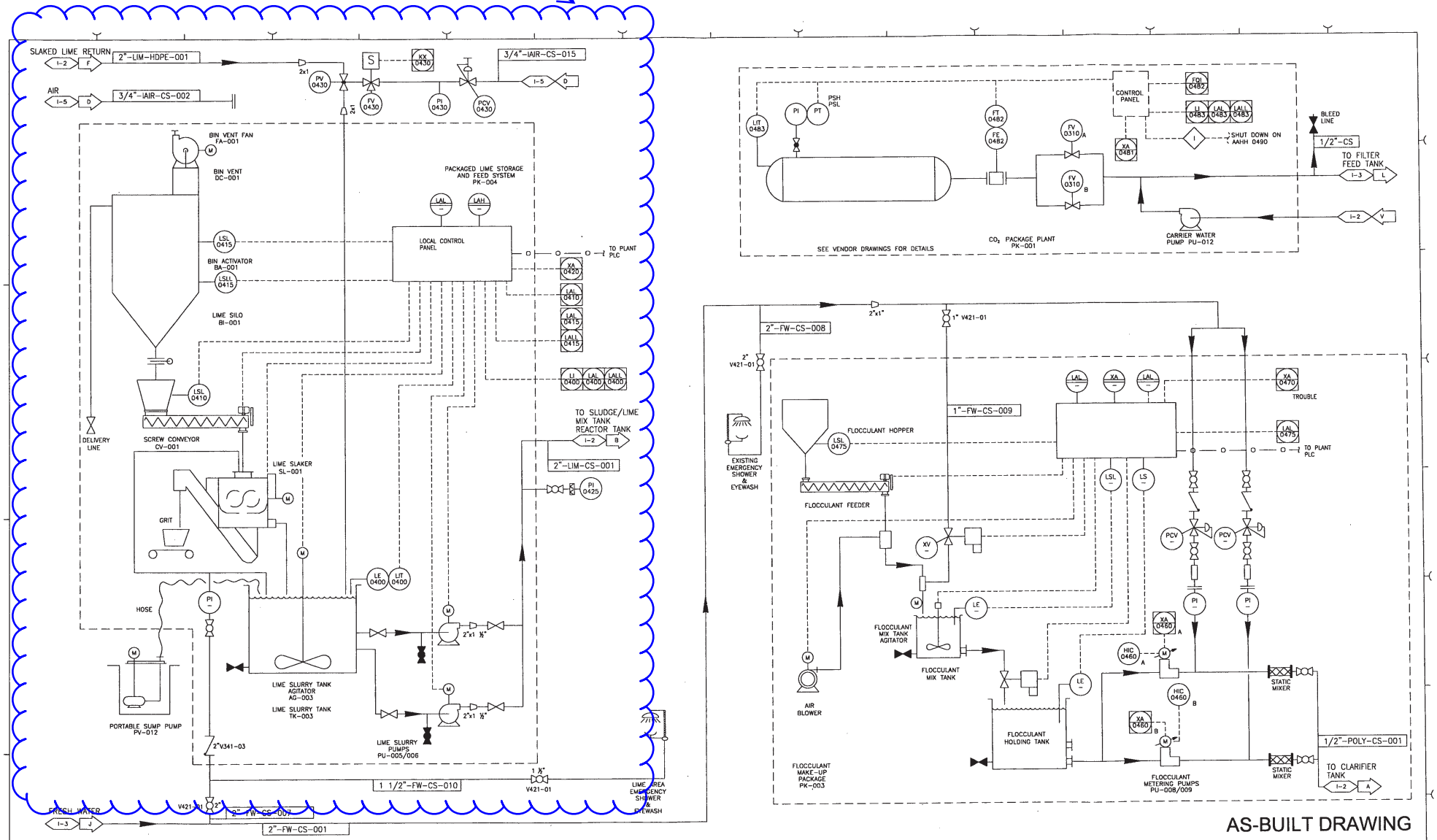

AS-BUILT DRAWING

ISS	D/M/Y	APP	ISSUED FOR
G	24/3/03		ISSUED FOR 100% DESIGN SUBMITTAL
H	29/4/03		REVISION
I	01/11/04		REVISION FOR AS-BUILT SUBMITTAL

ISS	D/M/Y	APP	ISSUED FOR
A	31/05/02		ISSUED FOR 62% DESIGN SUBMITTAL
B	12/06/02		ISSUED FOR 65% DESIGN SUBMITTAL
C	24/07/02		ISSUED FOR 90% DESIGN SUBMITTAL
D	08/08/02		ISSUED FOR 90% DESIGN SUBMITTAL
E	01/10/02		ISSUED FOR 90% SUBMITTAL TO EPA
F	07/01/03		ISSUED FOR E & I CONTRACT PROCUREMENT

REF	NUMBER	TITLE	REF	NUMBER	TITLE

REV. NO.	DATE	DRWN	CHKD	REMARKS

DESIGNED BY:
DRAWN BY:
SHEET CHK'D BY:
CROSS CHK'D BY:
APPROVED BY:
DATE:

CDM Federal Programs Corporation

APPROVED FOR CONSTRUCTION

CLIENT PROJECT MGR.	DEPARTMENT MGR.	PROJECT MGR.
SCALE NTS	DRN. E. PINTER	02/05/02
	DSN. D. LEE	29/04/02
	BY	D/M/Y

PROJECT No. U725D
ACTIVITY No. 3600
PACKAGE CODE

PROJECT PHASE: TREATMENT PLANT CONVERSION
AREA: EFFLUENT TREATMENT
DRAWING NO. D-U725D-100-N-0004
REV. H

amec

GILT EDGE MINE SITE
CONVERTED EFFLUENT TREATMENT
PIPING & INSTRUMENTATION DIAGRAM SHT.4

PROJECT NO.
FILE NAME: 100N0004.dwg
SHEET NO. I-4

CADD FILE ADDRESS

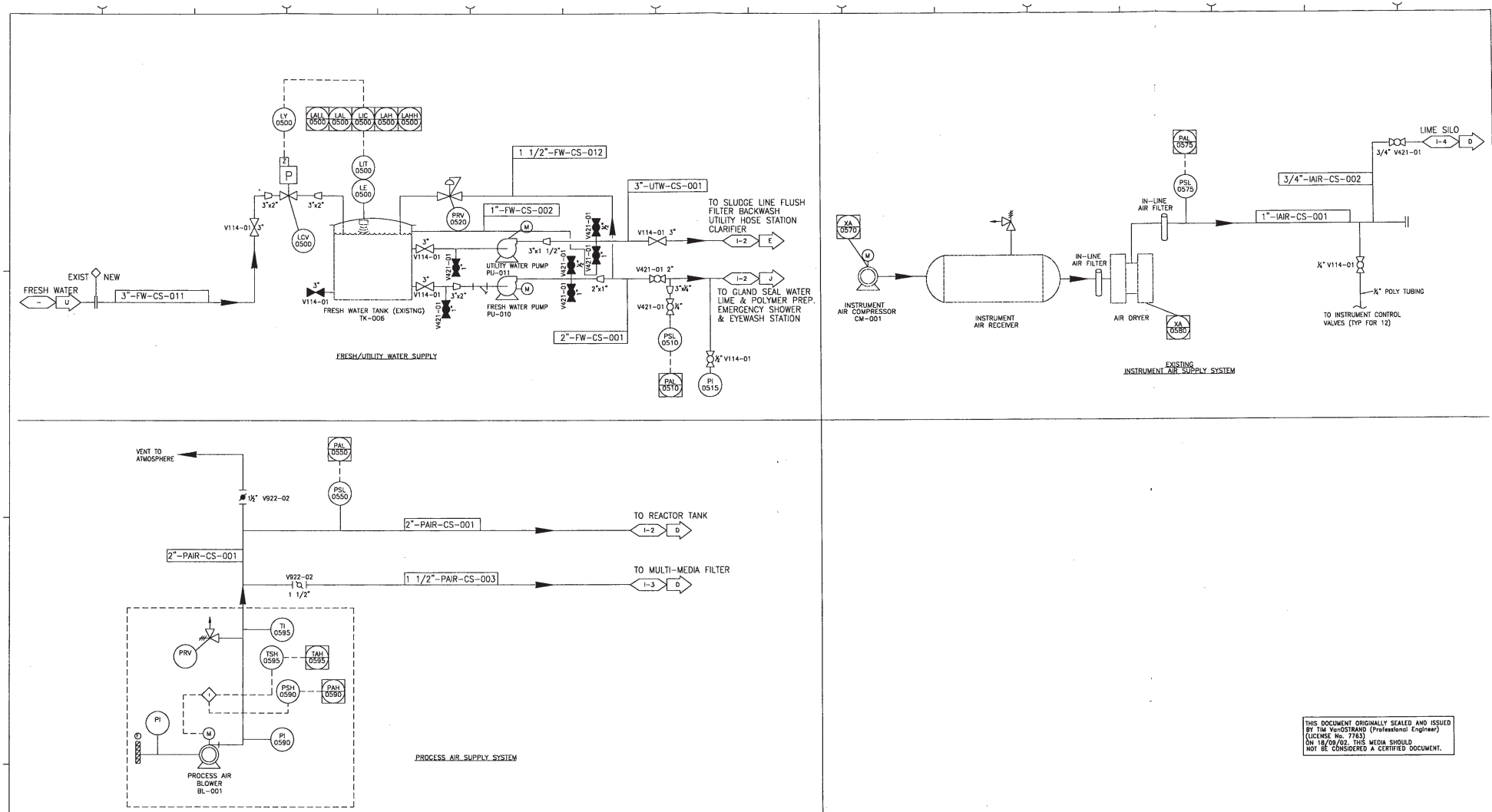

THIS DOCUMENT ORIGINALLY SEALED AND ISSUED BY TIM VanOSTRAND (Professional Engineer) (LICENSE No. 7763) ON 18/08/02. THIS MEDIA SHOULD NOT BE CONSIDERED A CERTIFIED DOCUMENT.

AS-BUILT DRAWING

ISS	D/M/Y	APP	ISSUED FOR
G	24/2/03		ISSUED FOR 100% DESIGN SUBMITTAL
H	01/11/04		REVISION FOR AS-BUILT SUBMITTAL

ISS	D/M/Y	APP	ISSUED FOR
A	01/05/02		ISSUED FOR 65% DESIGN SUBMITTAL
B	12/06/02		ISSUED FOR 65% DESIGN SUBMITTAL
C	04/07/02		ISSUED FOR 90% DESIGN SUBMITTAL
D	08/08/02		ISSUED FOR 90% DESIGN SUBMITTAL
E	31/10/02		ISSUED FOR 90% SUBMITTAL TO EPA
F	07/01/03		ISSUED FOR E & I CONTRACT PROCUREMENT

REF	NUMBER	TITLE	REF	NUMBER	TITLE

REV. NO.	DATE	DRWN	CHKD	REMARKS
G	24/2/03	GSB		ISSUED FOR 100% DESIGN SUBMITTAL
F	7/1/03	GSB		ISSUED FOR E & I CONTRACT PROCUREMENT
E	31/10/02	GSB		ISSUED FOR 90% SUBMITTAL TO EPA
D	8/8/02	W.M.		FOR 90% DESIGN SUBMITTAL
C	4/7/02	W.M.		FOR 90% DESIGN SUBMITTAL

DESIGNED BY: D.LEE
DRAWN BY: E.PINTER
SHEET CHK'D BY: D.MCLEOD
CROSS CHK'D BY:
APPROVED BY:
DATE: SEP 18/02

CDM Federal Programs Corporation

APPROVED FOR CONSTRUCTION

CLIENT PROJECT MGR.	DEPARTMENT MGR.	PROJECT MGR.
SCALE NTS	DRN. E. PINTER	03\05\02
	DSN. D. LEE	29\04\02
	BY	D/M/Y

PROJECT No. U7250
ACTIVITY No. 3600
PACKAGE CODE
PROJECT PHASE: TREATMENT PLANT CONVERSION
AREA: EFFLUENT TREATMENT
DRAWING NO. D-U725D-100-N-0005
REV. C

amec

GILT EDGE MINE SITE
CONVERTED EFFLUENT TREATMENT
PIPING & INSTRUMENTATION DIAGRAM SHT.5

PROJECT NO.
FILE NAME: 100N0005.dwg

SHEET NO.
I-5

CADD FILE ADDRESS

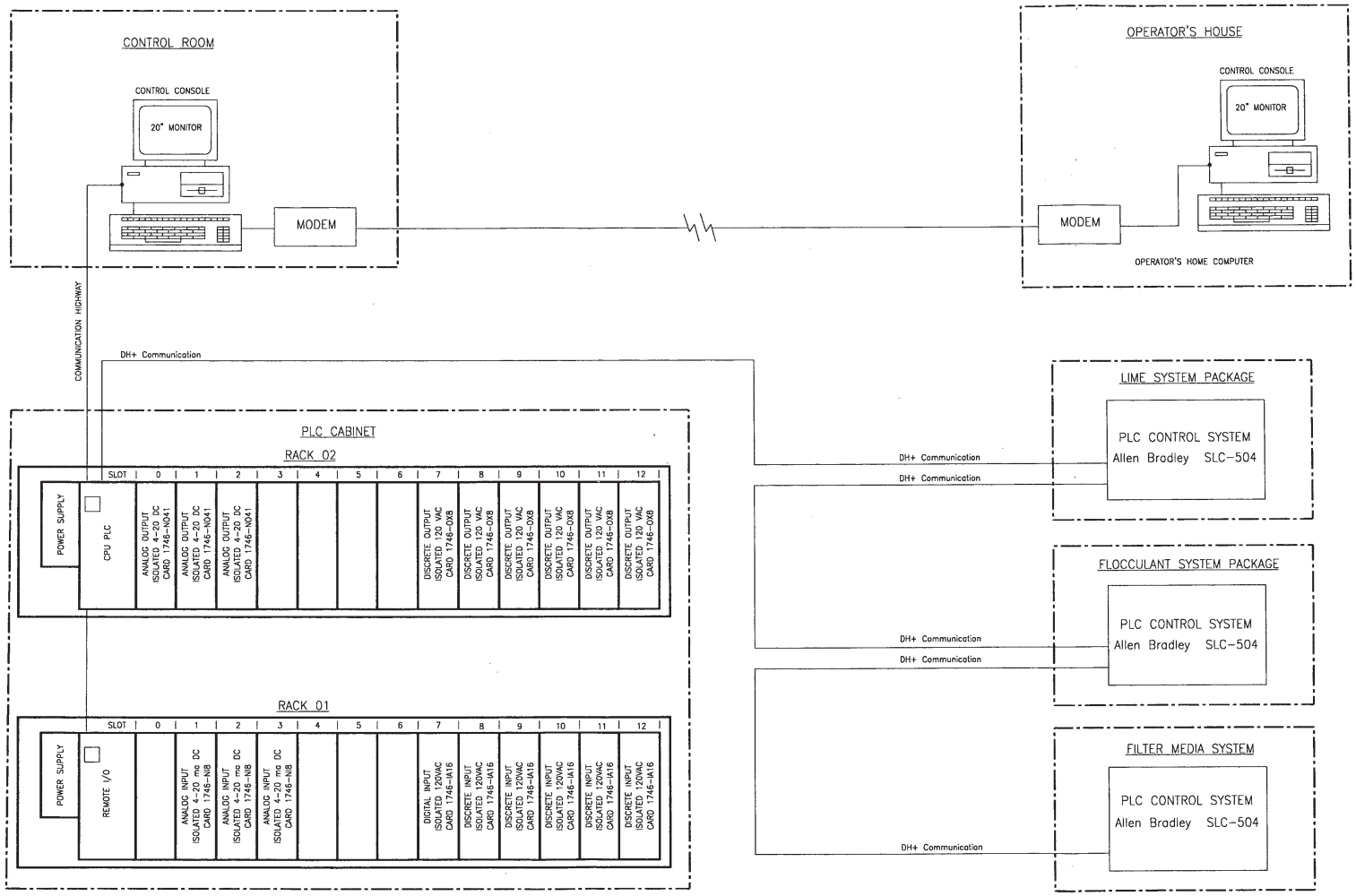

AS-BUILT DRAWING

ISS	D/M/Y	APP	ISSUED FOR
A	24/07/02		ISSUED FOR 90% DESIGN SUBMITTAL
B	08/08/02		ISSUED FOR 90% DESIGN SUBMITTAL
C	28/2/03		ISSUED FOR 100% DESIGN SUBMITTAL
D	31/11/04		AS-BUILT REVISIONS

REF	NUMBER	TITLE	REF	NUMBER	TITLE

APPROVED FOR CONSTRUCTION

CLIENT PROJECT MGR.	DEPARTMENT MGR.	PROJECT MGR.
SCALE NTS	DRN. LFJ	25/06/02
	DSN. LFJ	25/06/02
	BY	D/M/Y

PROJECT No. U7250
ACTIVITY No. 3600
PACKAGE CODE
PROJECT PHASE: TREATMENT PLANT CONVERSION
AREA: EFFLUENT TREATMENT
DRAWING NO. B-U725D-100-J-0600
REV. C

amec

REV. NO.	DATE	DRWN	CHKD	REMARKS
C	28/2/03	LFJ		ISSUED FOR 100% DESIGN SUBMITTAL
A	4/7/02	LFJ		FOR 90% DESIGN SUBMITTAL

DESIGNED BY:
DRAWN BY:
SHEET CHK'D BY:
CROSS CHK'D BY:
APPROVED BY:
DATE: JULY 2002

CDM Federal Programs Corporation

GILT EDGE MINE SITE
INSTRUMENTATION PLC BLOCK DIAGRAM
TYPICAL CONTROL SYSTEM

PROJECT NO.
FILE NAME: 100J0600.dwg

SHEET NO.
I-6

CADD FILE ADDRESS

Location	Component	Manufacturer	Model	Serial Number	Voltage/Phase
Strawberry Pump House	PowerFlex 400 AC drive for fan & pump applications	Allen-Bradley	PowerFlex 400		480 V --- 3 phase
Strawberry Pump House	1336 variable frequency drive	Allen-Bradley	1336	MF01GR24	480 V --- 3 phase
Strawberry Pump House	Series 15H/15V fan and pump inverter	Baldor	1D15H4150V-ED		480 V --- 3 phase
Hoodoo Gulch Pump Station	Electrical control panel	Robert L Palmer Company			480 V --- 3 phase
Hoodoo Gulch Pump Station	6-inch Brooks Mafer-Mag 7400 electronic flowmeter	Brooks Instrument	Wafer-Mag 7400	9512-20885-1-1	
WTP	Clarifier rake electrical control panel	WesTech			
Ruby Gulch Pump House	Benshaw soft start electrical control	Benshaw	RediStart Solid State Starter for RBX or RCX PowerStack with MX Control		480 V --- 3 phase
Ruby Gulch Pump House	PLC Cabinet	Automation Electronics	SLC 5/05 CPU		

Associated with	Aditional Information Available at	Electrical Schematics Available	Purchase/Manufacture Date
			(estimated)
Control of the 50 HP WTP feed pump	www.Allen-Bradley.com	n/a	2010
Control of a 150 HP emergency backup pump	www.Allen-Bradley.com	Wiring diagram - 3 sheets, 6 pages	1995
Control of a 150 HP emergency backup pump	www.Baldor.com	n/a	2002
Control of 50 HP Hoodoo vertical sump pump		Wiring diagram - 2 pages	2005
Measure flow from the Hoodoo pump	www.Brooksinstrument.com	n/a	1996
Control (up/down, speed, torque) of rake mechanism		Wiring diagram - 3 sheets, 6 pages	2003
Start/stop of a 150 HP motor and pump.	www.Benshaw.com	Wiring diagram - 3 sheets, 6 pages	2006
Ruby Gulch pump house and communication w/WTP		Wiring diagram - 6 sheets, 12 pages	2006

CLARIFIER RAKE - WESTECH

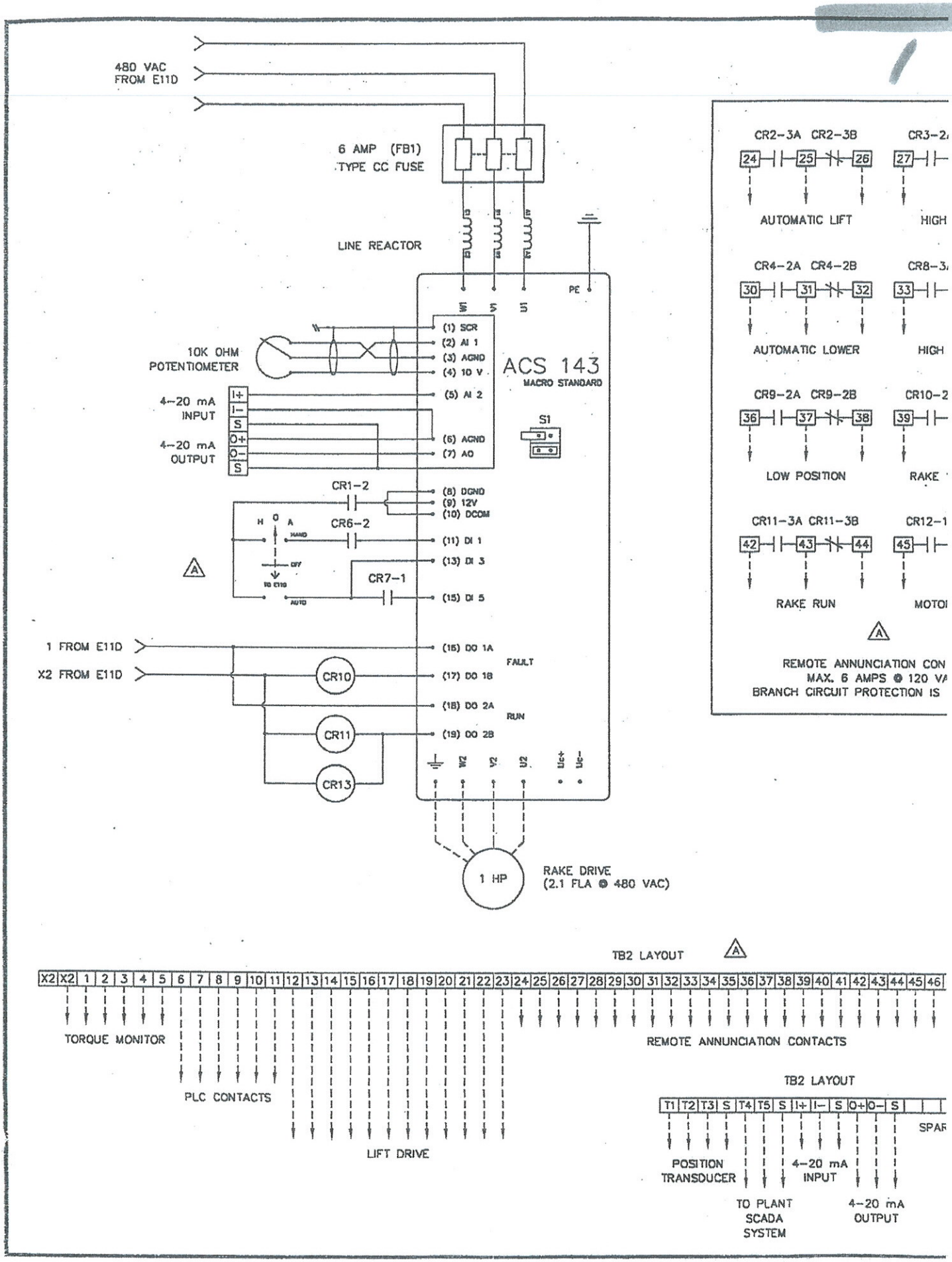

CR3-2B

29

ORQUE

CRB-3B

35

SITION

CR10-2B

41

FAULT

CR12-1B

47

UTOUT

ITS

OTHERS

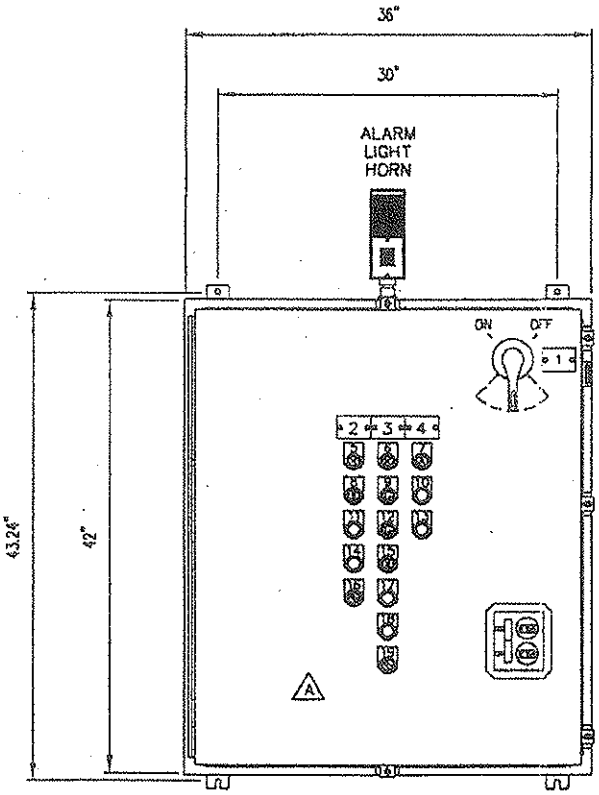

DOOR LAYOUT
NEMA 4X ENCLOSURE
(316 STAINLESS STEEL)

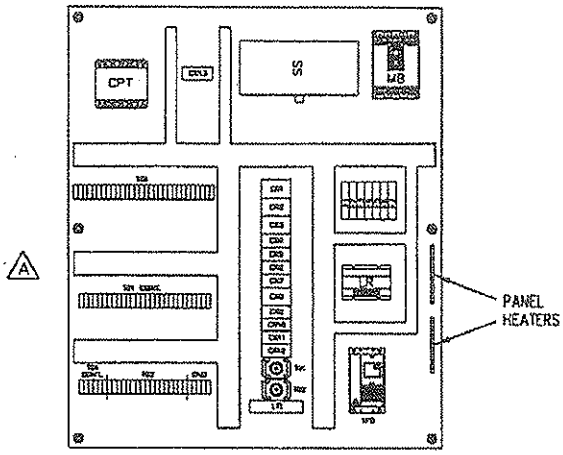

BACK PANEL
LAYOUT

NAME PLATES:
1 – MAIN DISCONNECT
2 – RAKE DRIVE
3 – LIFT DRIVE
4 – EQUIPMENT ALARMS
20 – RAKE DRIVE
21 – LIFT DRIVE

LEGENDS:
5 – RUN
6 – RUN
7 – VFD FAULT
8 – HAND/ OFF/ AUTO
9 – HIGH POSITION
10 – ALARM SILENCE
11 – START
12 – LOW POSITION
13 – RESET
14 – STOP
15 – HAND/ OFF/ AUTO
16 – POTENTIOMETER
17 – RAISE
18 – LOWER
19 – AUTO LOWER OFF/ ON

NOTE: 1–DASHED EQUIPMENT AND WIRING ARE NOT BY WESTECH ENG.
2–ROTATING DRIVE PARTS MAY DESTROY ELECTRICAL CONDUIT IF INSTALLED TOO CLOSE TO THE DRIVE UNIT.

48 49 50 51 52 53 54 55 56 57 58 59 60

SPARES

PREPARED FOR: GILT EDGE MINESITE
DEADWOOD, SOUTH DAKOTA

ENGINEER: CDM
DENVER, COLORADO

CUSTOMER P.O. NO.:

ELECTRICAL SCHEMATIC

DESCRIPTION

CLARIFIER | C-2-1-1

TYPE | SIZE

DATE	STD. BY	STD.CHKD.	STD.APPVD	SCALE	DATE	PROJ. BY	PROJ.CHKD.	PROJ.APPVD
				NONE	8-02	NRT	SHR	JLP

This drawing is property of WESTECH ENGINEERING, INC. and is transmitted in confidence. Neither receipt nor possession confers or transfers any rights to reproduce, use, or disclose, in whole or in part, data contained herein for any purpose, without the written permission of WESTECH ENGINEERING, INC.

REVISION	BY	CHKD	DATE	LTR
REVISED AS BUILT AND TESTED	SHR		12-4-02	A
REVISED PER RETURN SUBMITTAL	NRT	SHR	9-5-02	A

WESTECH

DRAWING NUMBER: E10D

PROJECT NUMBER: 19017A

REV. A

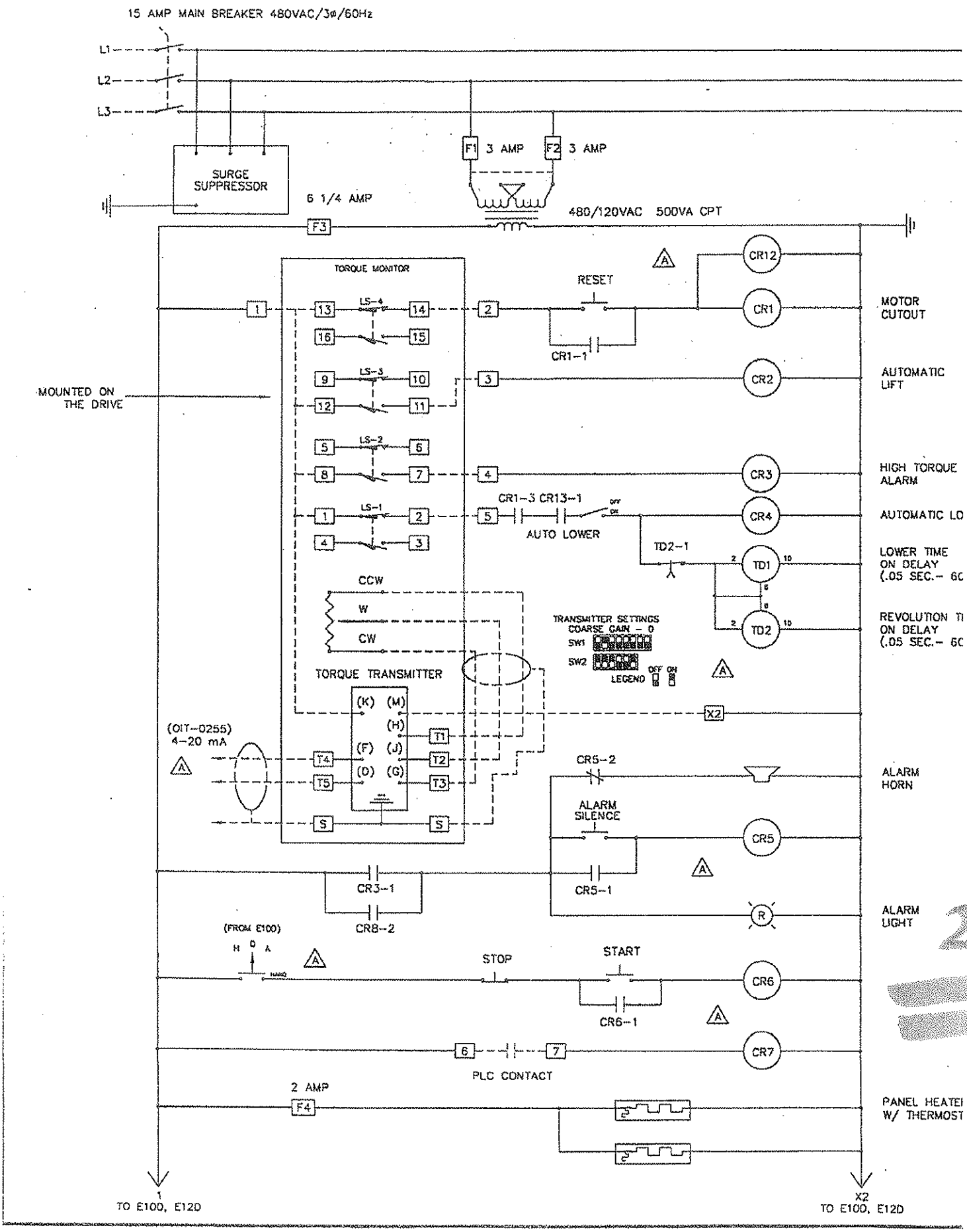
15 AMP MAIN BREAKER 480VAC/3ø/60Hz
L1
L2
L3
SURGE SUPPRESSOR
F1 3 AMP
F2 3 AMP
6 1/4 AMP
F3
480/120VAC 500VA CPT
TORQUE MONITOR
RESET
CR1-1
CR12
CR1
MOTOR CUTOUT
CR2
AUTOMATIC LIFT
MOUNTED ON THE DRIVE
LS-4
LS-3
LS-2
LS-1
CR3
HIGH TORQUE ALARM
CR1-3 CR13-1
AUTO LOWER
CR4
AUTOMATIC LO
TD2-1
TD1
LOWER TIME ON DELAY (.05 SEC.- 6C
TD2
REVOLUTION TI ON DELAY (.05 SEC.- 6C
CCW
W
CW
TORQUE TRANSMITTER
TRANSMITTER SETTINGS
COARSE GAIN - 0
SW1
SW2
LEGEND
OFF ON
X2
(OIT-0255)
4-20 mA
T1
T2
T3
T4
T5
S
CR5-2
ALARM HORN
ALARM SILENCE
CR5
CR5-1
CR3-1
CR8-2
ALARM LIGHT
(FROM E100)
H O A
STOP
START
CR6
CR6-1
CR7
PLC CONTACT
2 AMP
F4
PANEL HEATEI W/ THERMOST
1
TO E100, E12D
X2
TO E100, E12D

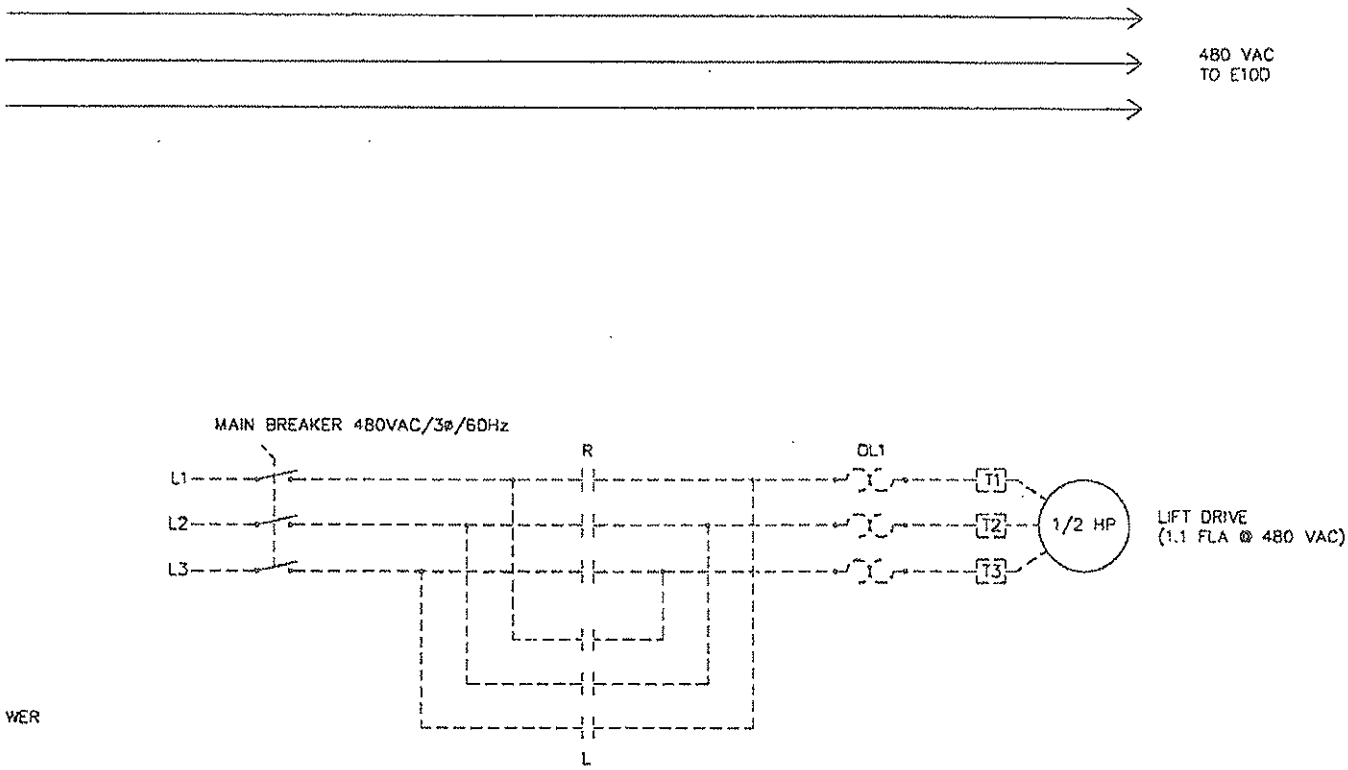

WER

HR.)

ME

HR.)

NOTE: 1–DASHED EQUIPMENT AND WIRING ARE NOT BY WESTECH ENG.
2–ROTATING DRIVE PARTS MAY DESTROY ELECTRICAL CONDUIT IF INSTALLED TOO CLOSE TO THE DRIVE UNIT.
3–OVER TORQUE CUTOUT REQUIRES MANUAL RESTART, OR RESET OF A LATCHED CUTOUT CIRCUIT THAT PREVENTS AUTO RESTART OF THE MOTOR. FAILURE TO DO SO WILL VOID THE DRIVE WARRANTY.

2

RS
ATS

PREPARED FOR: GILT EDGE MINESITE
DEADWOOD, SOUTH DAKOTA

ENGINEER: CDM
DENVER, COLORADO

CUSTOMER P.O. NO.:

DESCRIPTION: ELECTRICAL SCHEMATIC

TYPE: CLARIFIER | SIZE: C-2-1-1

DATE	STD. BY	STD.CHKD.	STD.APPVD	SCALE	DATE	PROJ. BY	PROJ.CHKD.	PROJ.APPVD
				NONE	8-02	NRT	SHR	JLP

This drawing is property of WESTECH ENGINEERING, INC. and is transmitted in confidence. Neither receipt nor possession confers or transfers any rights to reproduce, use, or disclose, in whole or in part, data contained herein for any purpose, without the written permission of WESTECH ENGINEERING, INC.

REVISION	BY	CHKD	DATE	LTR
REVISED AS BUILT AND TESTED	SHR	[illegible]	12-4-02	A
REVISED PER RETURN SUBMITTAL	NRT	EBT	9-5-02	A

WESTECH

DRAWING NUMBER	PROJECT NUMBER	REV.
E11D	19017A	A

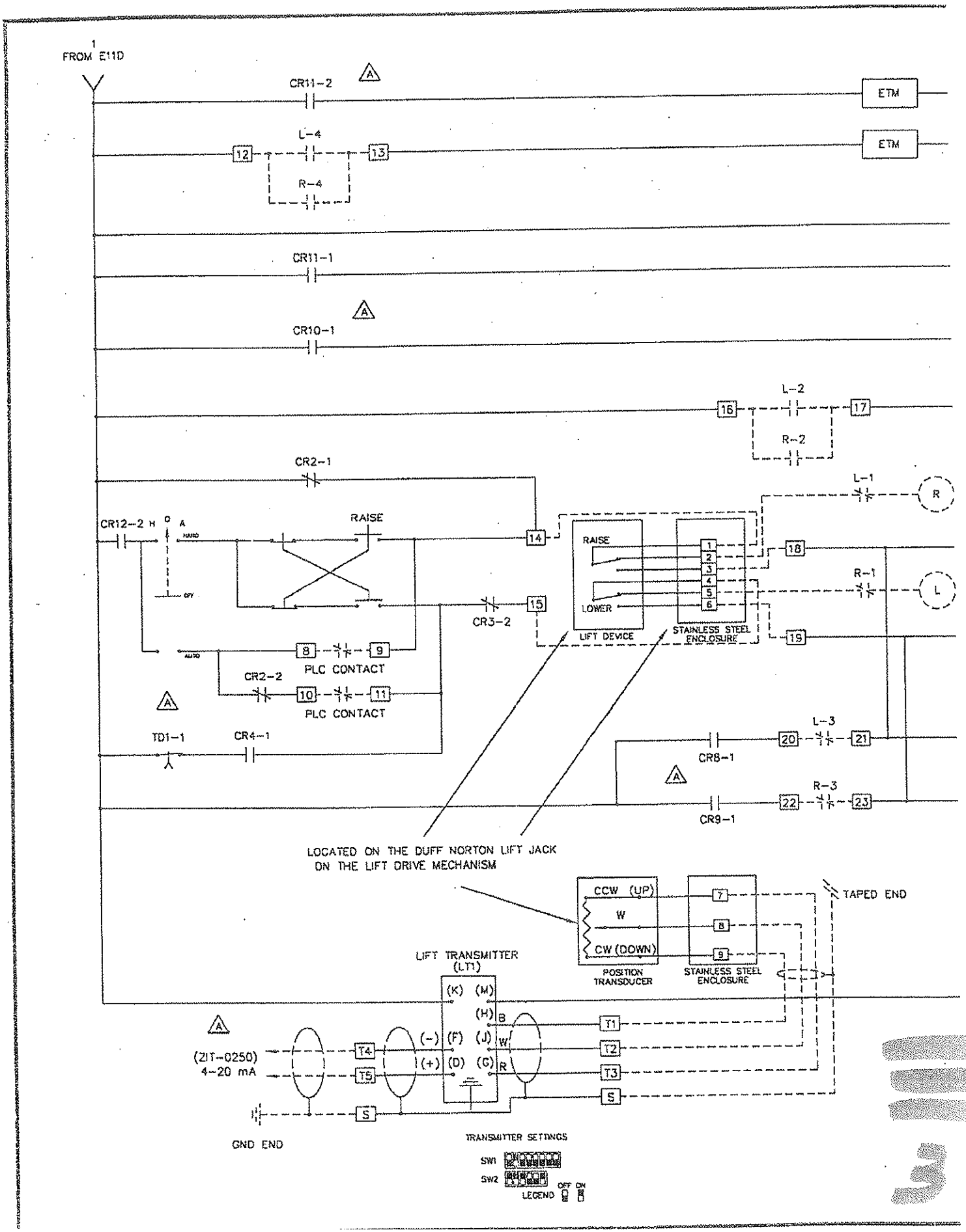
FROM E11D
CR11-2
ETM
L-4
R-4
CR11-1
CR10-1
L-2
R-2
CR2-1
CR12-2
RAISE
LOWER
LIFT DEVICE
STAINLESS STEEL ENCLOSURE
CR3-2
PLC CONTACT
CR2-2
TD1-1
CR4-1
L-1
R-1
L-3
R-3
CR8-1
CR9-1
LOCATED ON THE DUFF NORTON LIFT JACK ON THE LIFT DRIVE MECHANISM
CCW (UP)
W
CW (DOWN)
POSITION TRANSDUCER
TAPED END
LIFT TRANSMITTER (LT1)
(ZIT-0250) 4-20 mA
GND END
TRANSMITTER SETTINGS
SW1
SW2
LEGEND
OFF ON

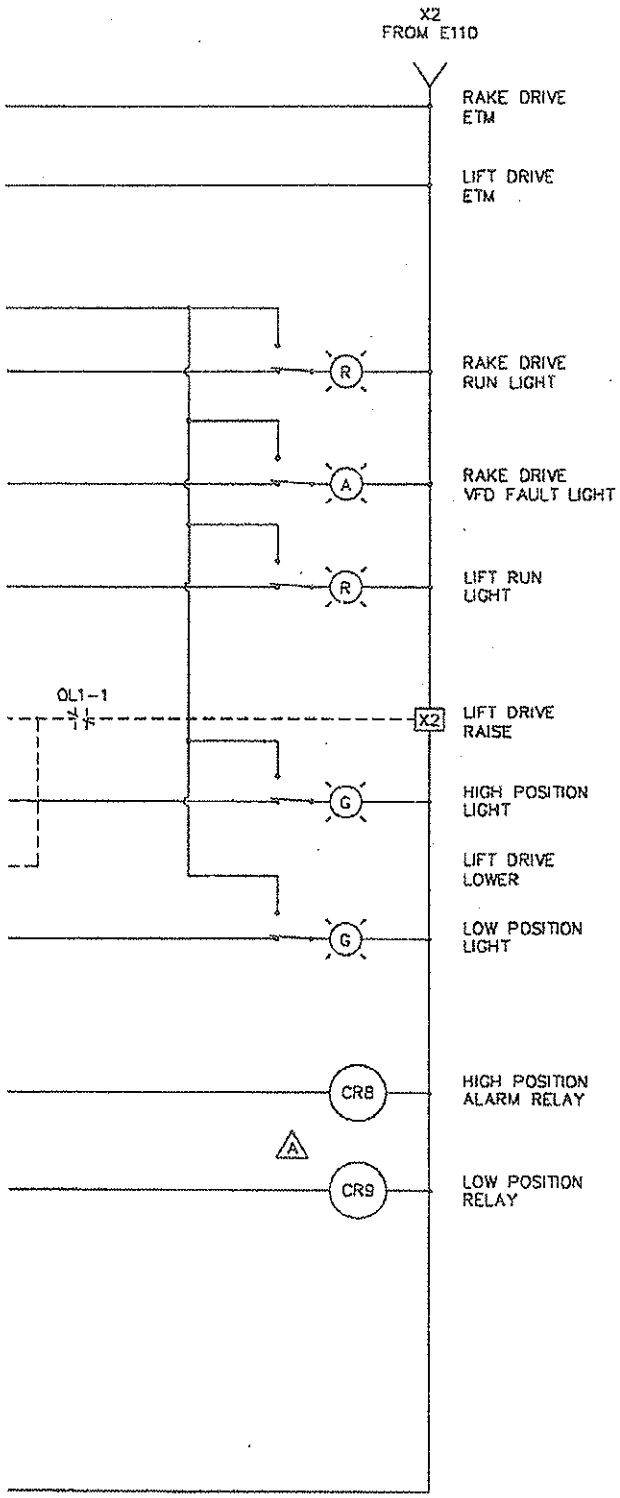

NOTE: 1-DASHED EQUIPMENT AND WIRING ARE NOT BY WESTECH ENG.

2-ROTATING DRIVE PARTS MAY DESTROY ELECTRICAL CONDUIT IF INSTALLED TOO CLOSE TO THE DRIVE UNIT.

3-OVER TORQUE CUTOUT REQUIRES MANUAL RESTART, OR RESET OF A LATCHED CUTOUT CIRCUIT THAT PREVENTS AUTO RESTART OF THE MOTOR. FAILURE TO DO SO WILL VOID THE DRIVE WARRANTY.

PREPARED FOR: GILT EDGE MINESITE
DEADWOOD, SOUTH DAKOTA

ENGINEER: CDM
DENVER, COLORADO

CUSTOMER P.O. NO.:

DESCRIPTION: ELECTRICAL SCHEMATIC

TYPE	SIZE
CLARIFIER	C-2-1-1

DATE	STD. BY	STD. CHKD	STD. APPVD	SCALE	DATE	PROJ. BY	PROJ. CHKD	PROJ. APPVD
				NONE	8-02	NRT	SHR	JLP

This drawing is property of WESTECH ENGINEERING, INC. and is transmitted in confidence. Neither receipt nor possession confers or transfers any rights to reproduce, use, or disclose, in whole or in part, data contained herein for any purpose, without the written permission of WESTECH ENGINEERING, INC.

REVISION	BY	CHKD	DATE	LTR
REVISED AS BUILT AND TESTED	SHR	[illegible]	12-4-02	A
REVISED PER RETURN SUBMITTAL.	NRT	EBT	9-5-02	A

WESTECH

DRAWING NUMBER	PROJECT NUMBER	REV.
E12D	19017A	A/B

1-17-96 PLANT EFFLUENT FLOW
K-FACTOR 216.942 PPG

Installation and Operation Manual
X-7400
June, 1993
Issue 3

Brooks Wafer-Mag® 7400 Electromagnetic Flowmeter Sizes .15" through 8"

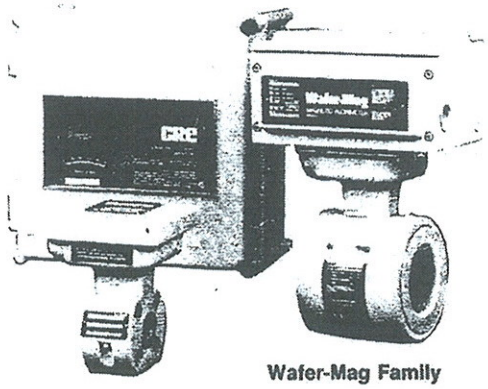

Wafer-Mag Family

HOODOO
FLOW METER

MAG INSPECTION

THE WORKING PARTS OF THIS EQUIPMENT HAVE BEEN INSPECTED AND PERFORMANCE PROVIDED IN ACCORDANCE WITH ESTABLISHED STANDARDS.

INSPECTED BY JCJ
DATE 1-3-96
PART NO. 7406C1A1C1A1DAA
SERIAL NO. 9312-20885-1
ORDER NO. 20885-010
MAX. WORKING PRESS. _____ PSIG

B-502Y-239-R02

BROOKS INSTRUMENT ROSEMOUNT®

Measurement
Control
Analytical
Valves

HOODOO GULCH PUMP STATION CONTROL

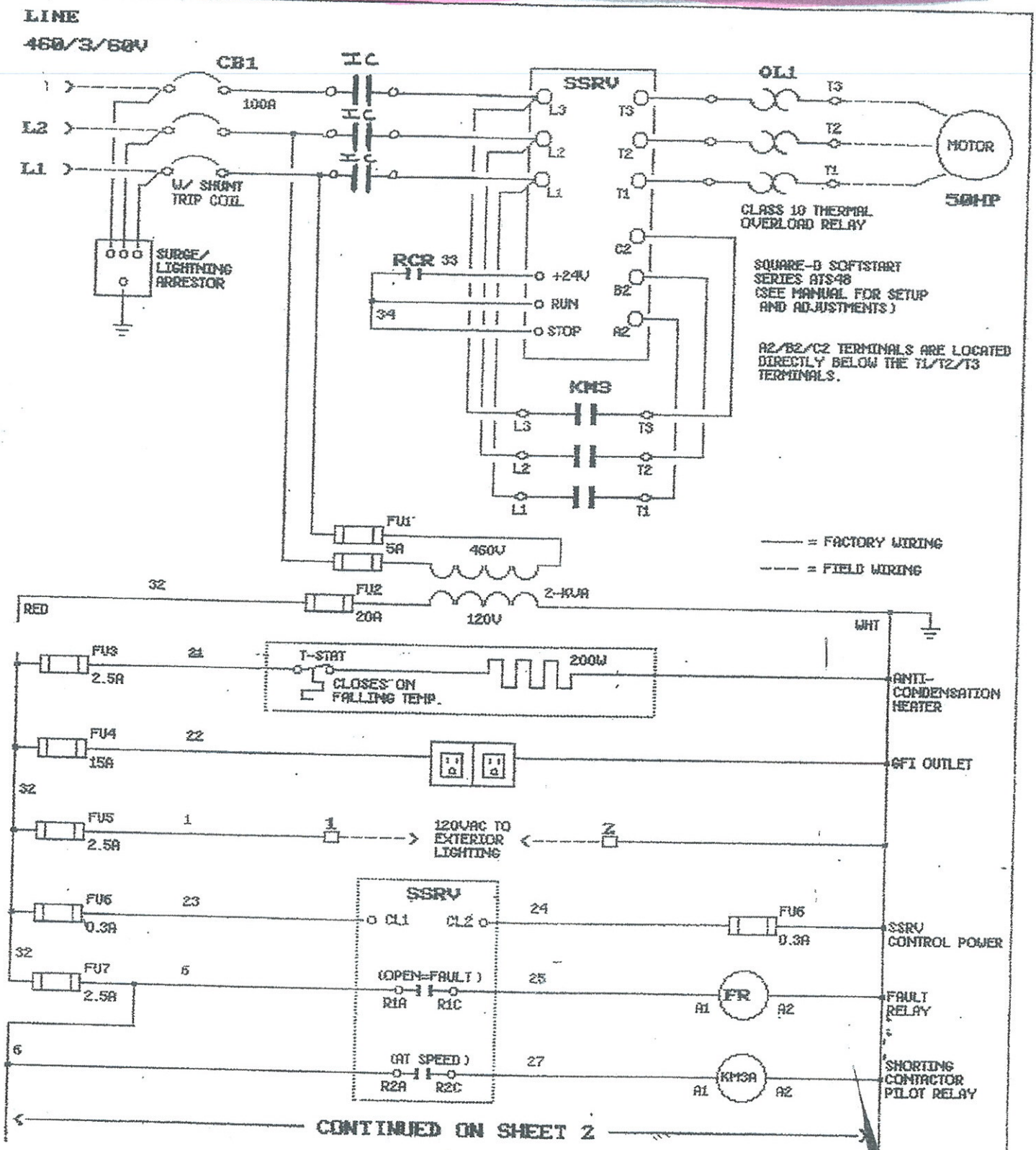

CONTINUED ON SHEET 2

REV	DATE	DESCRIPTION	BY	CHKD
	4/29/05	AS-BUILT	DJF	
	10/24/05	ADDED TMR+IC CONTACTOR	WW	

PALMER

ROBERT L. PALMER COMPANY
ENGLEWOOD, COLORADO

WIRING DIAGRAM
SQUARE-D SSRV
4X55, 50HP, 460V

SHEET 1 OF 2

QUADNA PUMP, PO# 47892

DRAWN: DJF 3/7/05
CHECKED:

DRAWING 05-433-2

REV. 1

HOODOO GULCH PUMP STATION CONTROL

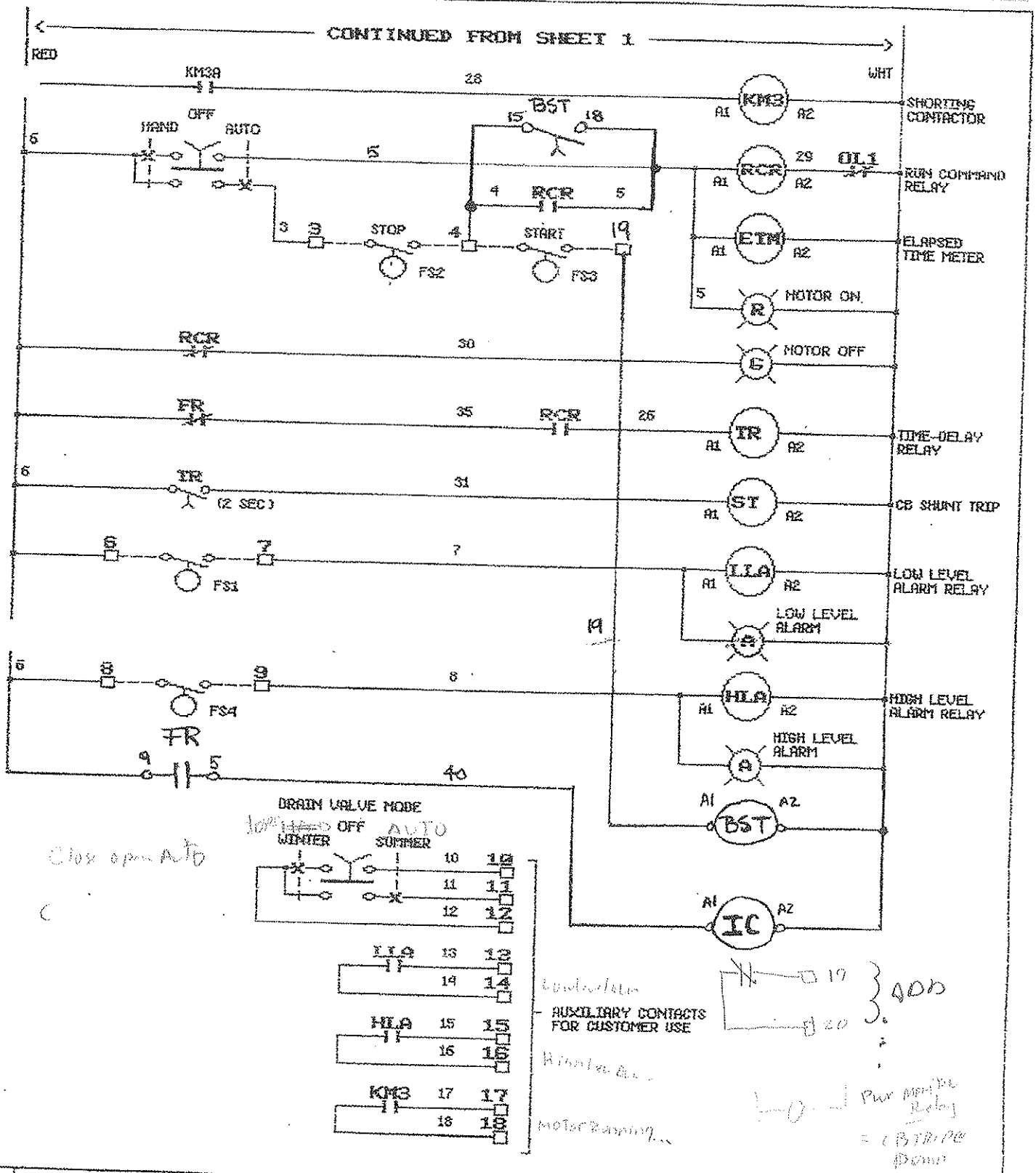

REV	DATE	DESCRIPTION	BY	CHKD
	4/29/05	AS-BUILT	DJF	
	10/24/05	ADDED TMR+IC CONT	WW	

PALMER

ROBERT L. PALMER COMPANY
ENGLEWOOD, COLORADO

WIRING DIAGRAM
SQUARE-D SSRV
4XSS, 50HP, 460V
SHEET 2 OF 2

QUADNA PUMP, PO# 47852

DRAWN: DJF 3/7/05
CHECKED:

DRAWING 05-433-3
REV. 4

15 | 16 | 17 | 18 | 19 | 20 | 21 | 22 | 23 | 24 | 25 | 26 | 27 | 28

PAGE 1

RUBY GULCH
SOFT START
PUMP CONTROL

LEGEND

LVSS:	RBX STACK
BP1:	BYPASS CONTACTOR
GND:	GROUND LUGS
SS:	SS PILOT RELAY
ATL:	ATL PILOT RELAY
O/L1:	OVERLOAD 1
PB1:	START PUSHBUTTON
PB2:	STOP PUSHBUTTON
SW1:	SS-OFF-ATL SWITCH
CT1-3:	SOFT START CTS
CT4-6:	ATL CTS
TB1:	CUSTOMER TERMINAL BLOCKS
TB2:	SHOP TERMINAL BLOCKS

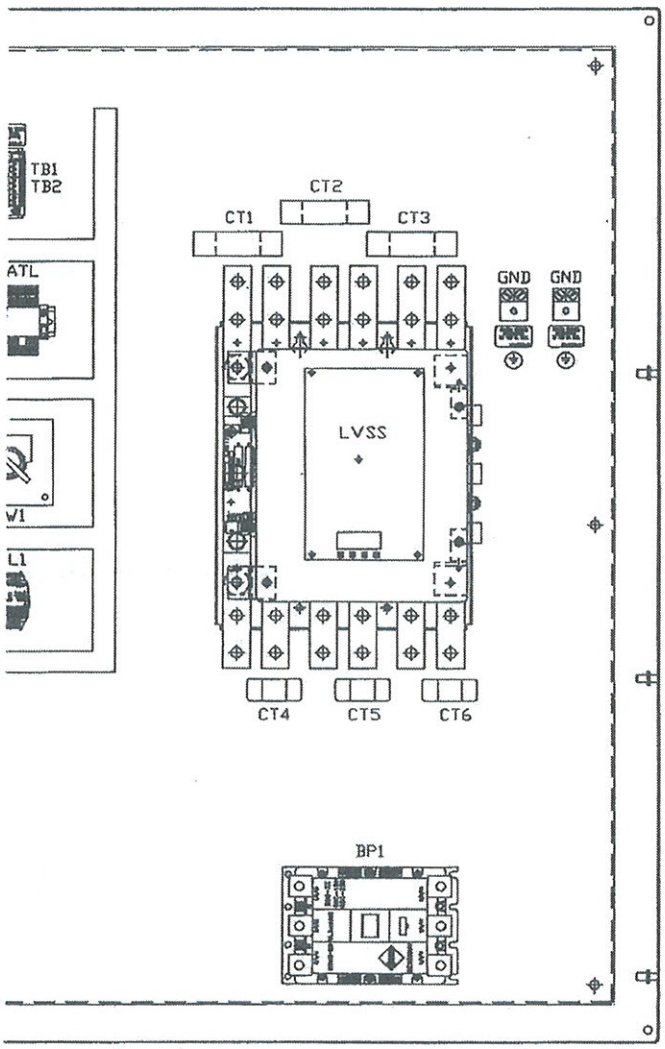

PANEL

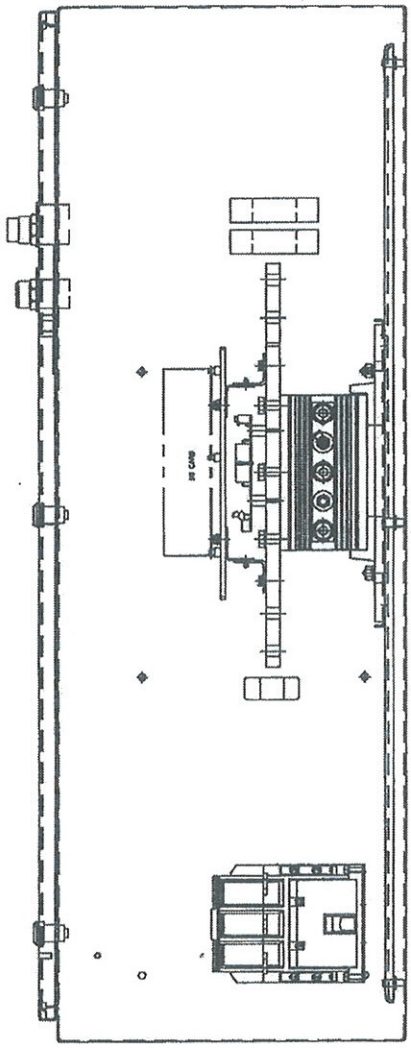

RIGHT SIDE

REVISIONS	DO NOT SCALE DWG	THIRD ANGLE PROJECTION	UNLESS OTHERWISE SPECIFIED ALL DIMENSIONS IN INCHES INTERPRET DRAWING PER ASME Y14.5M-1994 TOLERANCES: .XX ± .02 .XXX ± .005 ANGLES ± 1° MATERIAL: FINISH:	SIGNATURES / DATE: DRWN. CAH 1/16/06; CHKD.; ENG. TJI 1/16/06; MFG.	TITLE: ENCLOSURE LAYOUT RBX3S150480H12NCST FOR: WESCO P.O. NO. 6672-147980

THIS DRAWING AND ALL INFORMATION CONTAINED HEREIN, IS THE PROPERTY OF BENSHAW INC., AND MAY NOT BE REPRODUCED, OR DIVULGED TO UNAUTHORIZED PERSONS WITHOUT THE EXPRESS WRITTEN CONSENT OF BENSHAW INC. IT IS PROVIDED SOLELY FOR THE CONVENIENCE OF THE USER AND SHALL BE RETURNED UPON REQUEST.

BENSHAW
1850 E. SUTTER RD. GLENSHAW, PA. 15116
WALLACE INDUSTRIAL PARK RR#1 LISTOWEL, ONTARIO N4W3G6

SIZE D | DWG NO. S200600189A-00 | REV 0

SCALE: 1:4 | SHEET 1 OF 3

1 2 3 4 5 6 7 8 9 10 11 12 13 14

S200600189A-00

PAGE 1

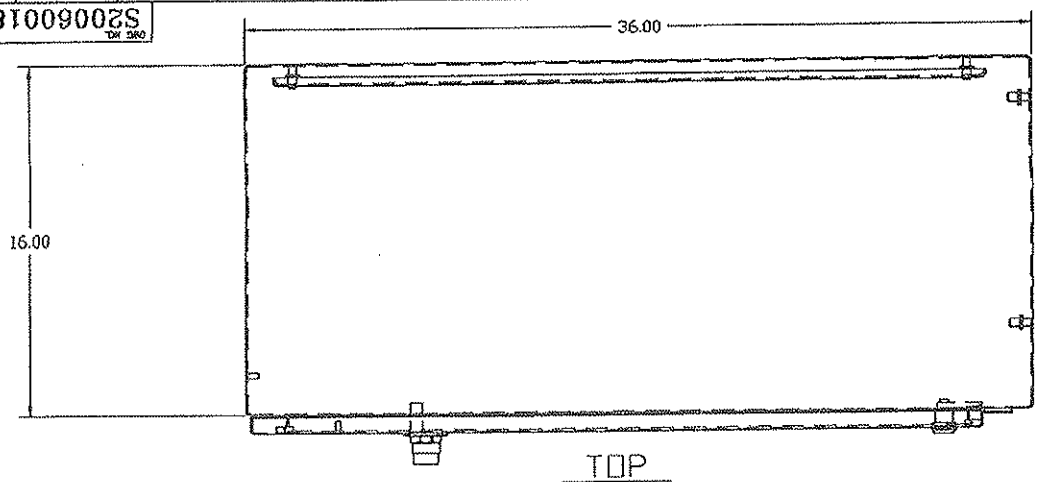

TOP

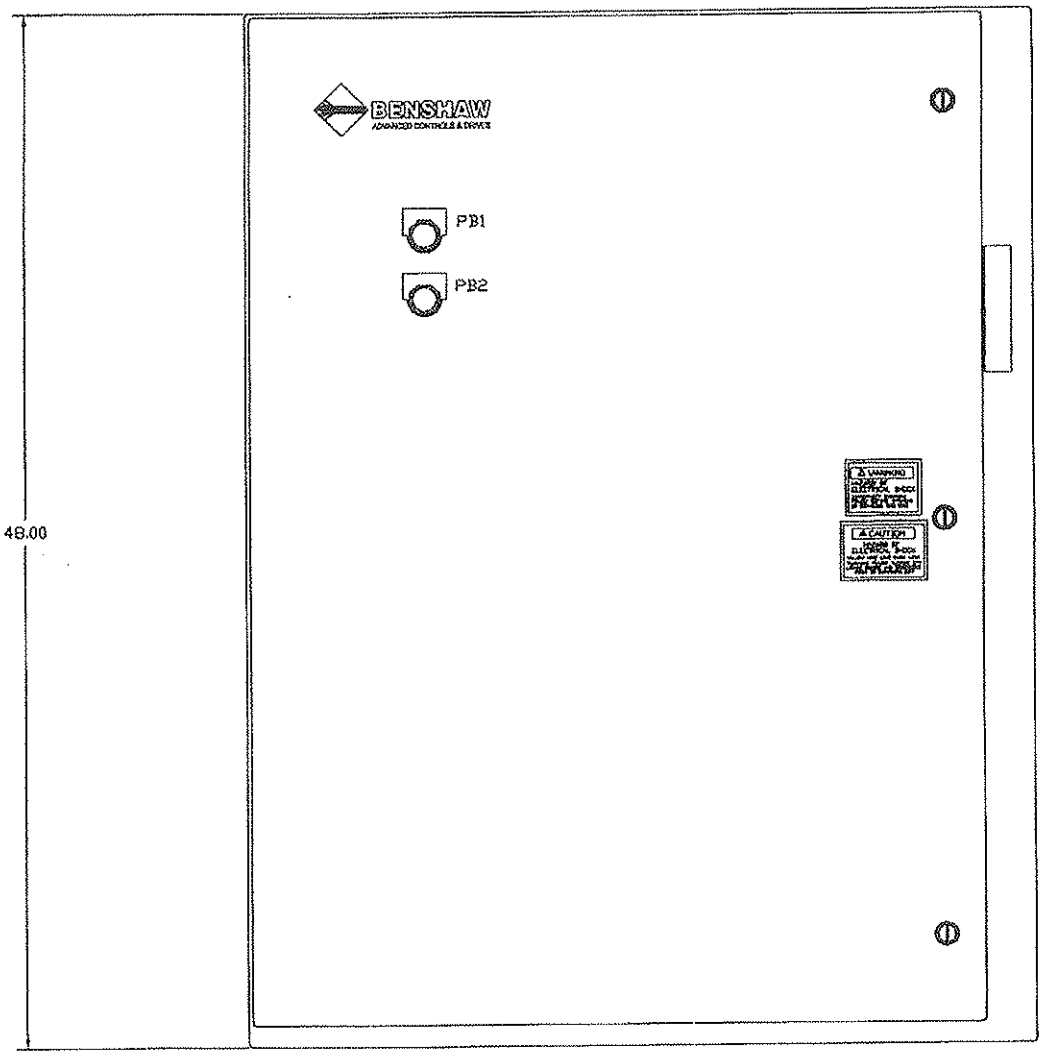

FRONT

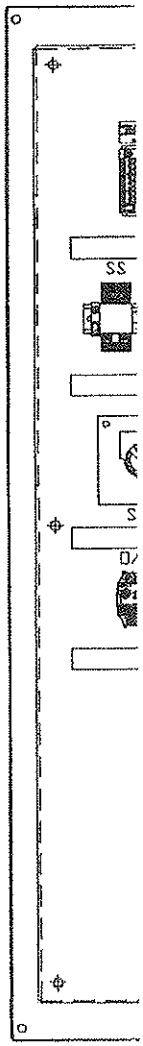

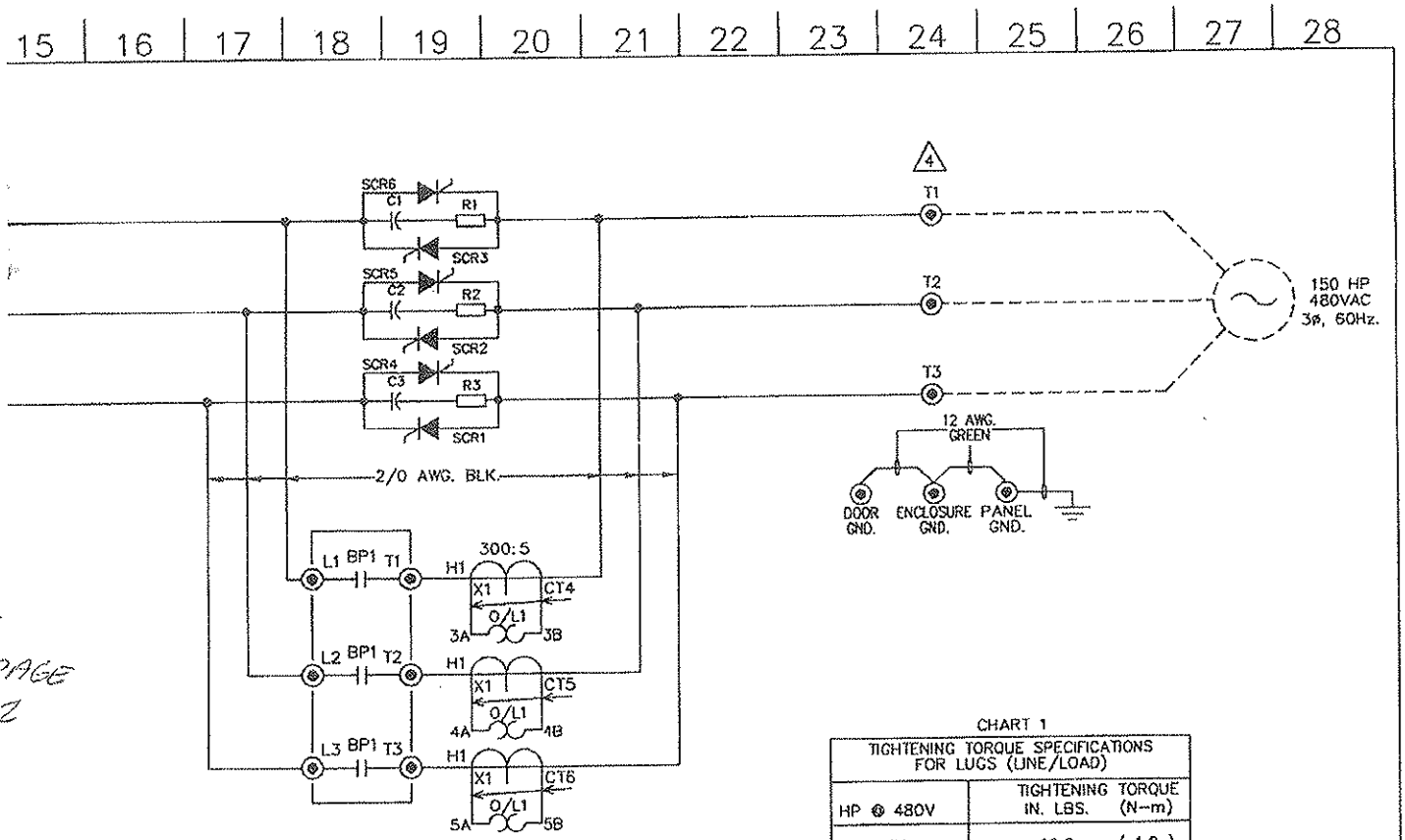

PAGE 2

CHART 1

TIGHTENING TORQUE SPECIFICATIONS FOR LUGS (LINE/LOAD)		
HP @ 480V	TIGHTENING TORQUE IN. LBS.	(N-m)
1-30	10.6	(1.2)
40-50	26.5	(3)
60-100	120	(13.6)

1. SELECT EITHER THREE OR TWO WIRE CONTROL.
2. REFER TO INSTRUCTION MANUAL FOR BURDEN SWITCH SETTINGS (S6).
3. JP3: INSTALLED = CURRENT, REMOVED = VOLTAGE
   JP1: INSTALLED = VOLTAGE, REMOVED = CURRENT
4. TIGHTEN POWER LUG FIELD WIRING CONNECTIONS TO CHART 1 SPECIFICATIONS. IF BREAKER IS SUPPLIED ON LINE SIDE OF STACK USE TORQUE VALUES ON BREAKER

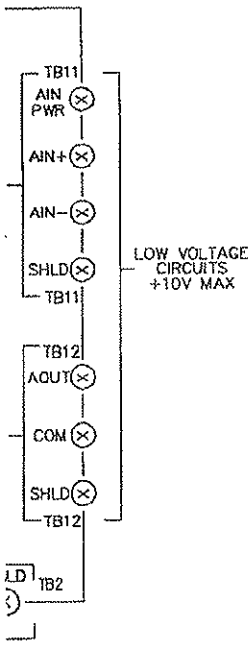

RUBY GULCH SOFT START PUMP CONTROL

STANDARD LEGEND

- WIRE NODE SYMBOL MAY HAVE TERMINAL BLOCK
- BENSHAW SUPPLIED TERMINAL BLOCK
- TERMINAL STRIP
- POWER CONNECTION
- PC BOARD TERMINALS
- TWISTED PAIR
- TWISTED SHIELDED PAIR
- SHIELDED WIRE
- FIELD WIRING

REVISIONS	DO NOT SCALE	DWG	THIRD ANGLE PROJECTION	UNLESS OTHERWISE SPECIFIED ALL DIMENSIONS IN INCHES INTERPRET DRAWING PER ASME Y14.5M-1994	SIGNATURES		DATE	TITLE: POWER SCHEMATIC RBX3S150480H12NCST FOR: WESCO P.O. NO.6672-147980	BENSHAW 1659 E. SUTTER RD. GLENSHAW, PA. 15116 WALLACE INDUSTRIAL PARK HALEY ESTATES, ORLANDO FLORIDA
			THIS DRAWING AND ALL INFORMATION CONTAINED HEREIN, IS THE PROPERTY OF BENSHAW INC., AND MAY NOT BE REPRODUCED, OR DIVULGED TO UNAUTHORIZED PERSONS WITHOUT THE EXPRESS WRITTEN CONSENT OF BENSHAW INC. IT IS PROVIDED SOLELY FOR THE CONVENIENCE OF THE USER AND SHALL BE RETURNED UPON REQUEST.	TOLERANCES: .XX ± .02 .XXX ± .005 ANGLES ± 1°	DRWN.	CAH	1/16/06		
					CHKD.				
					ENG.	TJI	1/16/06		
				MATERIAL:	MFG.				
				FINISH:					

SIZE	DWG NO.	REV
D	S200600189A-00	0

SCALE: 1:1 SHEET 2 OF 3

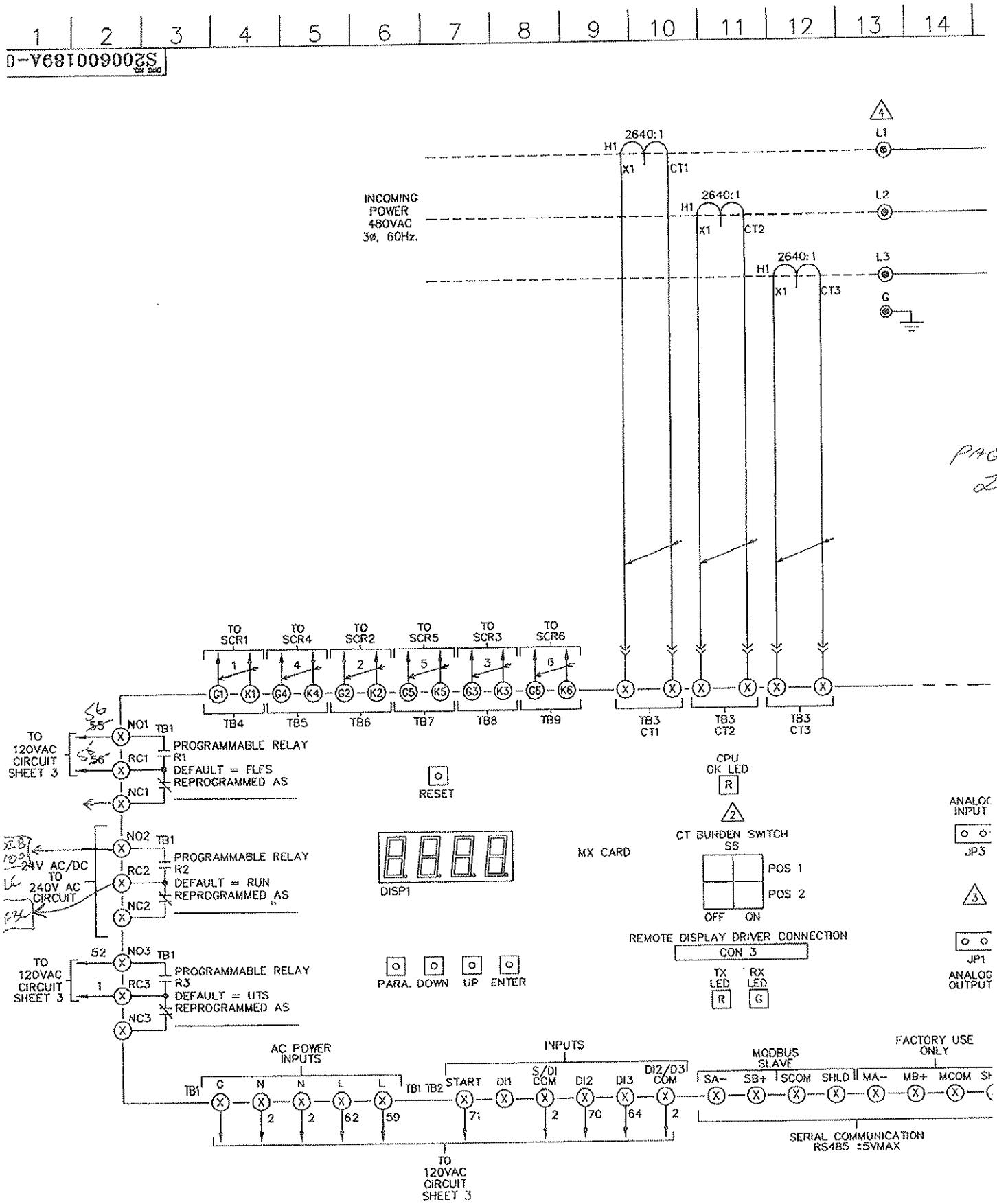
1 2 3 4 5 6 7 8 9 10 11 12 13 14
S2006001894-0
INCOMING POWER 480VAC 3ø, 60Hz.
L1
L2
L3
G
2640:1
H1
X1
CT1
CT2
CT3
TO SCR1
TO SCR4
TO SCR2
TO SCR5
TO SCR3
TO SCR6
G1 K1 G4 K4 G2 K2 G5 K5 G3 K3 G6 K6
TB4
TB5
TB6
TB7
TB8
TB9
TB3 CT1
TB3 CT2
TB3 CT3
TO 120VAC CIRCUIT SHEET 3
NO1
RC1
NC1
TB1
PROGRAMMABLE RELAY R1
DEFAULT = FLFS
REPROGRAMMED AS
NO2
RC2
NC2
PROGRAMMABLE RELAY R2
DEFAULT = RUN
REPROGRAMMED AS
24V AC/DC
TO 240V AC CIRCUIT
NO3
RC3
NC3
PROGRAMMABLE RELAY R3
DEFAULT = UTS
REPROGRAMMED AS
RESET
DISP1
PARA.
DOWN
UP
ENTER
MX CARD
CPU OK LED
CT BURDEN SWITCH S6
POS 1
POS 2
OFF
ON
REMOTE DISPLAY DRIVER CONNECTION
CON 3
TX LED
RX LED
ANALOG INPUT
JP3
JP1
ANALOG OUTPUT
AC POWER INPUTS
INPUTS
MODBUS SLAVE
FACTORY USE ONLY
G N N L L
START
DI1
S/DI COM
DI2
DI3
DI2/DI3 COM
SA- SB+ SCOM SHLD
MA- MB+ MCOM
SERIAL COMMUNICATION RS485 ±5VMAX
TO 120VAC CIRCUIT SHEET 3
PAGE 2

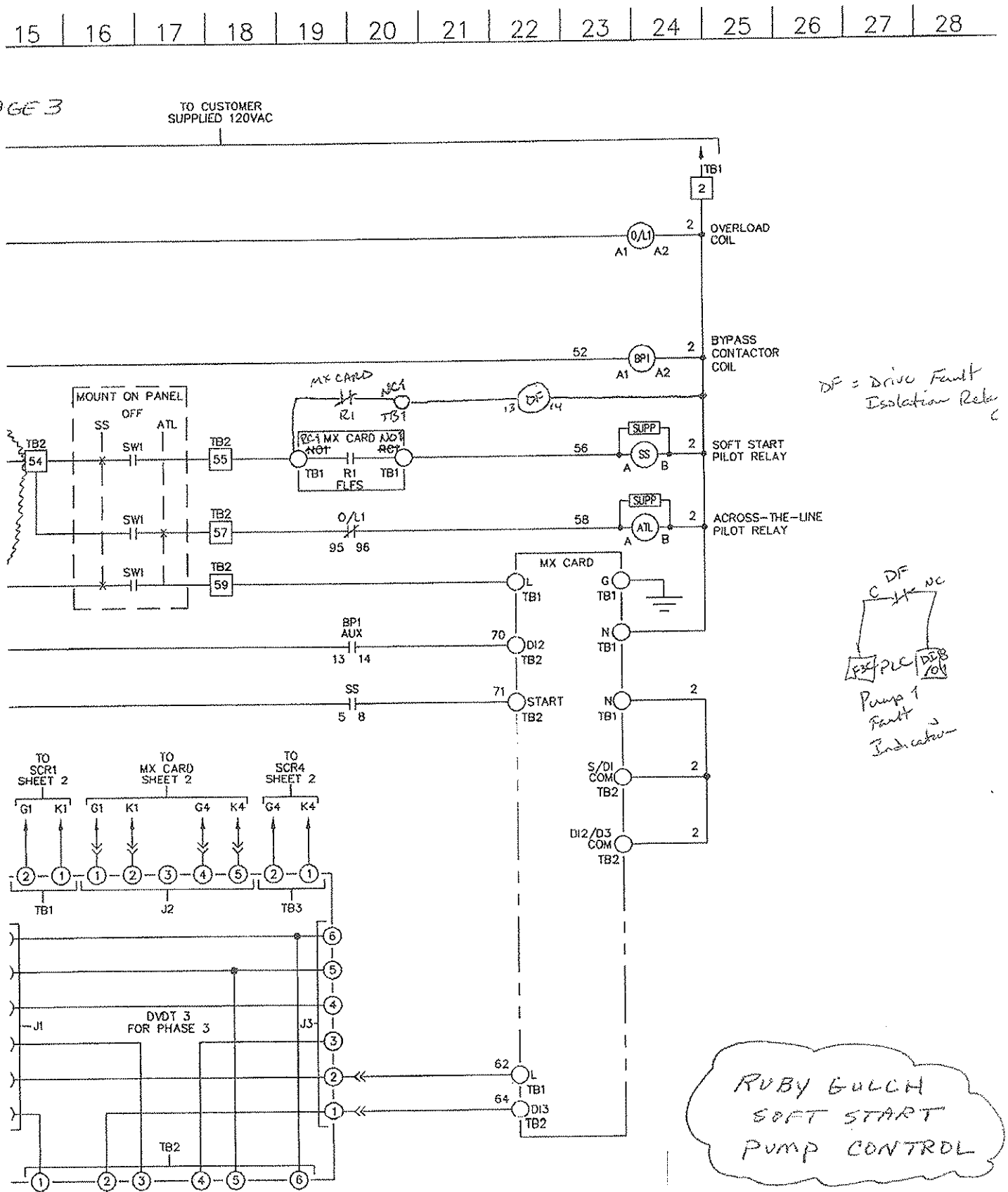
15 16 17 18 19 20 21 22 23 24 25 26 27 28
PAGE 3
TO CUSTOMER SUPPLIED 120VAC
TB1
2
O/L1
A1 A2
OVERLOAD COIL
52
BP1
BYPASS CONTACTOR COIL
MOUNT ON PANEL
OFF
SS
ATL
SW1
TB2
54
55
57
59
MX CARD
NC1
R1
TB1
DF
13 14
MX CARD NOT RCY
R1 FLFS
SUPP
56
SS
SOFT START PILOT RELAY
58
ATL
ACROSS-THE-LINE PILOT RELAY
95 96
MX CARD
L
G
N
BP1 AUX
13 14
70
DI2
START
71
5 8
S/DI COM
DI2/DI3 COM
TO SCR1 SHEET 2
TO MX CARD SHEET 2
TO SCR4 SHEET 2
G1 K1
G1 K1 G4 K4
G4 K4
TB1
J2
TB3
J1
J3
DVDT 3 FOR PHASE 3
62
64
DI3
TB2
120 121
ø3
OT SWITCH
DF = Drive Fault Isolation Relay
DF
C NC
PLC
Pump 1 Fault Indication
RUBY GULCH SOFT START PUMP CONTROL
THIRD ANGLE PROJECTION
THIS DRAWING AND ALL INFORMATION CONTAINED HEREIN, IS THE PROPERTY OF BENSHAW INC., AND MAY NOT BE REPRODUCED, OR DIVULGED TO UNAUTHORIZED PERSONS WITHOUT THE EXPRESS WRITTEN CONSENT OF BENSHAW INC. IT IS PROVIDED SOLELY FOR THE CONVENIENCE OF THE USER AND SHALL BE RETURNED UPON REQUEST.
UNLESS OTHERWISE SPECIFIED ALL DIMENSIONS IN INCHES INTERPRET DRAWING PER ASME Y14.5M-1994
TOLERANCES: .XX ± .02 .XXX ± .005 ANGLES ± 1°
MATERIAL:
FINISH
SIGNATURES
DRWN. CAH 1/16/06
CHKD.
ENG. TJI 1/16/06
MFG.
DATE
TITLE:
CONTROL SCHEMATIC
RBX3S150480H12NCST
FOR: WESCO
P.O. NO. 6672-147980
BENSHAW
SIZE D
DWG NO. S200600189A-00
REV 3
SCALE: 1:1
SHEET 3 OF 3
REVISIONS
DO NOT SCALE DWG

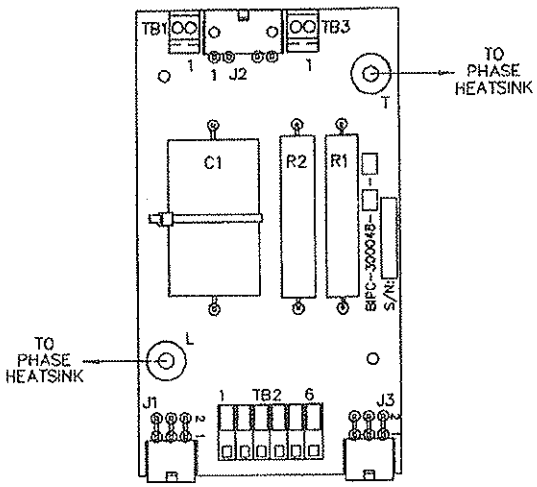
TB1
TB3
J2
TO PHASE HEATSINK
C1
R2
R1
BIPC-3000AB
S/N
TO PHASE HEATSINK
J1
TB2
J3

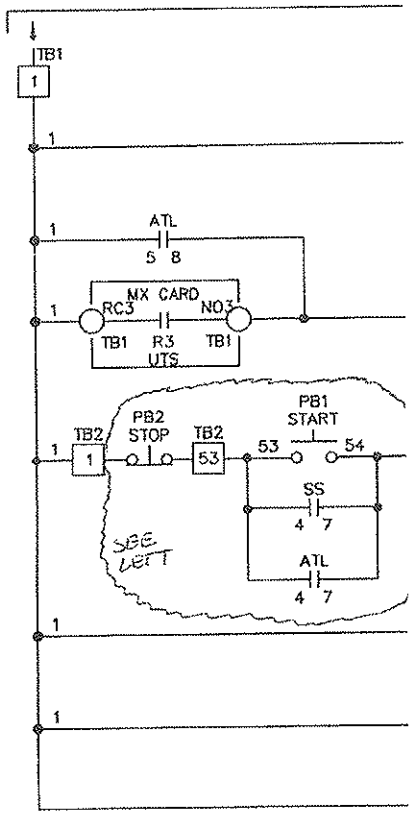
TB1
ATL
5 8
MX CARD
RC3
NO3
TB1 R3 TB1
UTS
PB2 STOP
PB1 START
TB2
53
54
SS
4 7
ATL
4 7
SEE LEFT

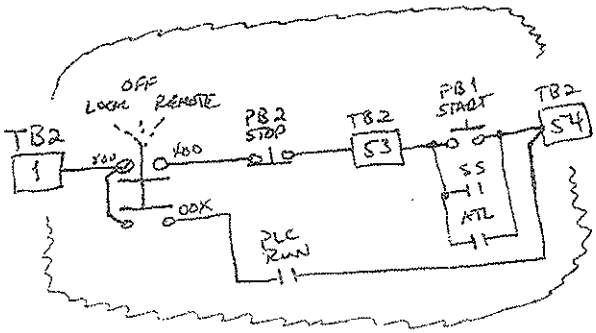
TB2
1
OFF
LOCAL
REMOTE
PB2 STOP
TB2
53
PB1 START
TB2
54
SS
ATL
PLC RUN

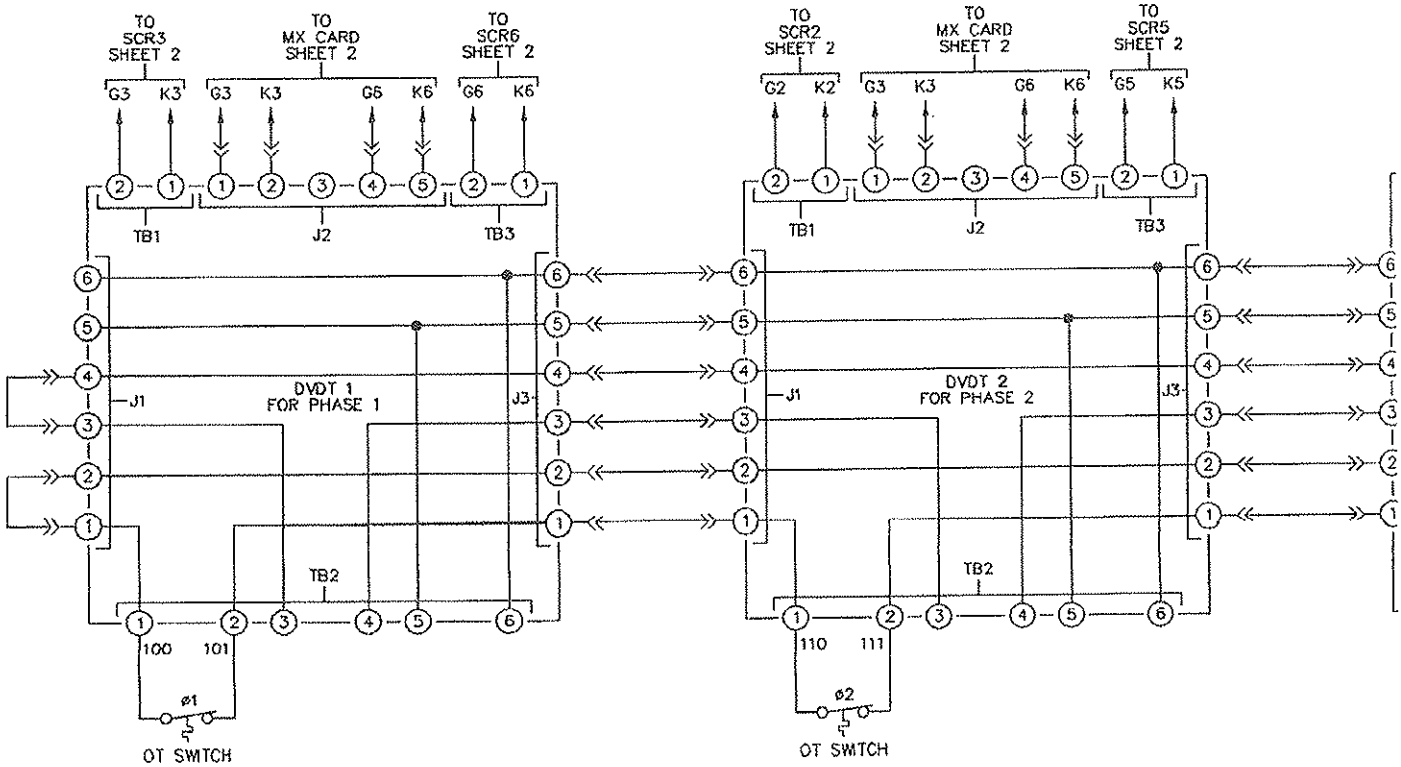
TO SCR3 SHEET 2
TO MX CARD SHEET 2
TO SCR6 SHEET 2
G3 K3 G3 K3 G6 K6 G6 K6
TB1
J2
TB3
J1
DVDT 1 FOR PHASE 1
J3
TB2
100 101
Ø1
OT SWITCH
TO SCR2 SHEET 2
TO MX CARD SHEET 2
TO SCR5 SHEET 2
G2 K2 G3 K3 G6 K6 G5 K5
DVDT 2 FOR PHASE 2
110 111
Ø2
OT SWITCH

MATERIALS

MARK	QTY.	DESCRIPTION	MANUFACTURER	MODEL NUMBER	MARK	QTY.	DESCRIPTION	MANUFACTURER	MODEL NUME
15	207	TERMINAL BLOCK	ALLEN BRADLEY	1492-J10	22	1	RECEPTACLE	LEVITON	5320-ICP
16	1	25A CIRCUIT BREAKER	ALLEN BRADLEY	1492-CB1G250	23	1	OPERATOR INTERFACE: 2711P-B10-C4D2	ALLEN BRADLEY	2711P-B10C4D 2
17	1	20A CIRCUIT BREAKER	ALLEN BRADLEY	1492-CB1G200	24	1	GROUND LUG	BLACKBURN	L-70
18	1	15A CIRCUIT BREAKER	ALLEN BRADLEY	1492-CB1G150	25	1	5 PORT ETHERNET SWITCH	B&B ELECTRONICS	IASW5P
19	1	6A CIRCUIT BREAKER	ALLEN BRADLEY	1492-CB1G060	26	1	LIGHT	COOPER	BC-120-LTS-120-EB2
20	1	2A CIRCUIT BREAKER	ALLEN BRADLEY	1492-CB1G020	27	1	MOUNTING FOOT KIT	HOFFMAN	CMFK
21	1	4 CHANNEL LOOP ISOLATOR	PHOENIX CONTACT	MCR-4CLP-1/1-00	28	8	SPDT RELAY, 120 VAC, 10A	IDEC	RH1B-UL-AC1

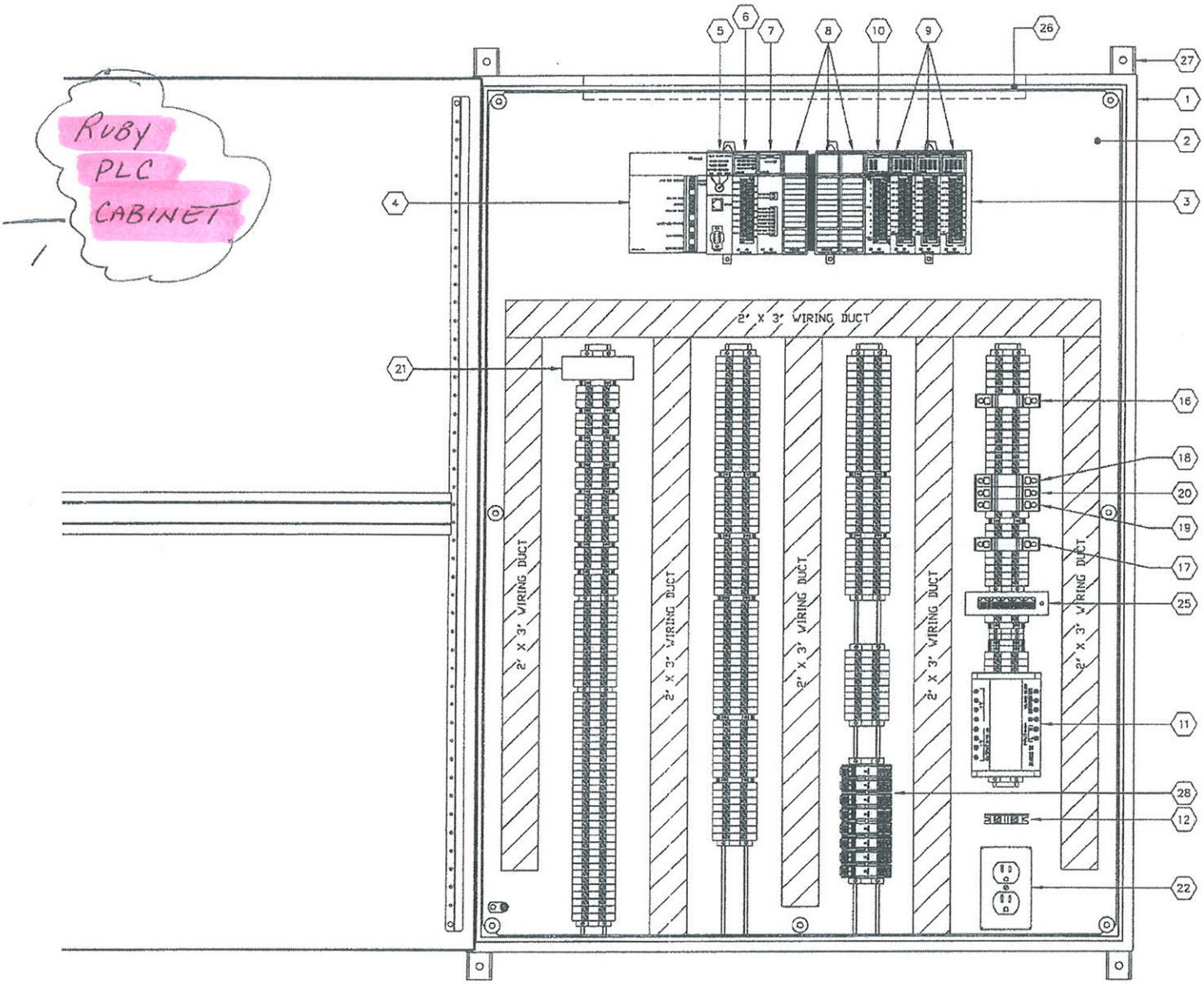

BACK PANEL DETAIL

NOTE:

MOUNT TERMINAL STRIPS ON STAND OFFS TO PROVIDE ADDITIONAL ROOM FOR WIRING

TION & ELECTRONICS, INC. CASPER WYOMING	TITLE: GILT EDGE MINE SITE RUBY GULCH PUMP STATION PANEL LAYOUT	CUSTOMER: ENERGY ELECTRIC	
		SHEET 1 OF 6	DRAWING NUMBER: D-22331
		JOB NO.: 8571-03	

BILL OF

RK	QTY.	DESCRIPTION	MANUFACTURER	MODEL NUMBER	MARK	QTY.	DESCRIPTION	MANUFACTURER	MODEL NUMBER
	1	48" X 36" X 12" ENCLOSURE	HOFFMAN	C-SD483612	8	3	SLOT FILLER	ALLEN-BRADLEY	1746-N2
	1	BACK PANEL	HOFFMAN	C-48P36	9	3	DIGITAL INPUT	ALLEN-BRADLEY	1746-IA16
	1	10 SLOT CHASSIS	ALLEN-BRADLEY	1746-A10	10	[illegible]	DISCRETE OUTPUT	ALLEN-BRADLEY	1746-OX8
	1	PLC POWER SUPPLY	ALLEN-BRADLEY	1746-P4	11	1	LOOP POWER SUPPLY	IDEC	PSSR-E24
	1	PROCESSOR	ALLEN-BRADLEY	1747-L552	12	1	SURGE SUPPRESSOR	HARRIS	V151DA40
	1	ANALOG INPUT	ALLEN-BRADLEY	1746-NI8	13	1	AC FUSED TERMINAL BLOCK	ALLEN BRADLEY	1492-WFB4
	1	ANALOG OUTPUT	ALLEN-BRADLEY	1746-NO4I	14	16	DC FUSED TERMINAL BLOCK	ALLEN BRADLEY	1492-WFB4

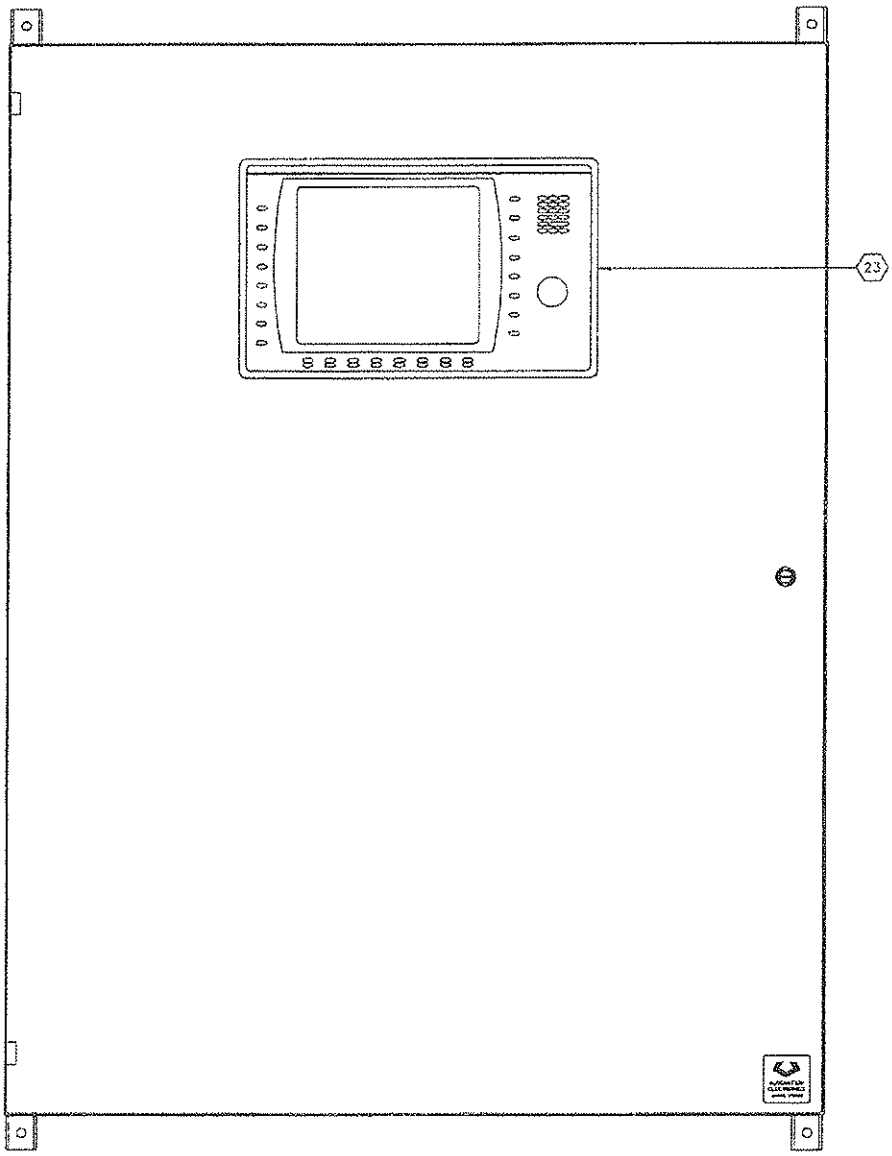

FRONT PANEL DETAIL

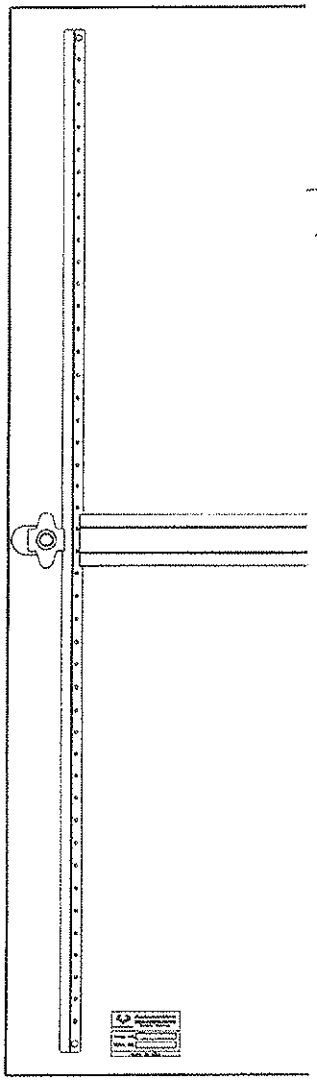

DATE	REVISION	BY	DR.
10/28/05	SHOP AS-BUILT	BL	RN

FILE: D22331-1 DATE: 10/28/05

DESIGNED: KH DRAFTED: RN

P.O. NO.:

SCALE: 1/8" = 1"

IF THIS BAR DOES NOT EQUAL ONE INCH ADJUST SCALES ACCORDINGLY

This drawing is the exclusive property of Automation & Electronics, Inc., and is loaned to the recipient for their confidential use only. As consideration the recipient agrees that it will not be used in any manor detrimental to the interests of Automation & Electronics, Inc., also that it shall be returned upon request, and shall not be reproduced, disposed of, or altered in any way without the written consent of Automation & Electronics, Inc.

PHONE
(307) 234-9311
FAX
(307) 234-9438
WEBSITE:
http://www.autoelect.com
EMAIL:
sales@autoelect.com

AUTOMA

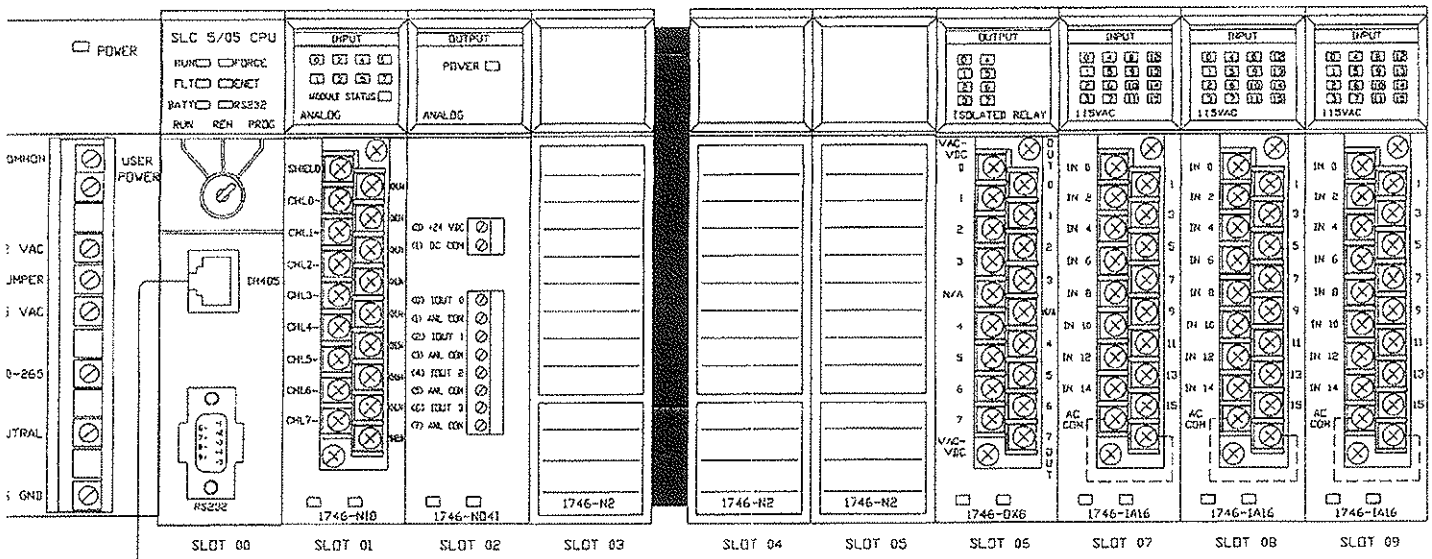

CH CABLE

CH CABLE

25

SPARE TERMINAL BLOCKS

2

23

DI = DISCRETE INPUT
DO = DISCRETE OUTPUT
AI = ANALOG INPUT
AO = ANALOG OUTPUT

DI1 — * = SEQUENTIAL NUMBER
/00 — POINT OR CHANNEL

TERMINAL LABELING LEGEND

RUBY PLC CABINET

LEGEND:

- PLC TERMINAL BLOCK.
- DC FUSED TERMINAL BLOCK.
- AC FUSED TERMINAL BLOCK.
- FIELD TERMINAL BLOCK.

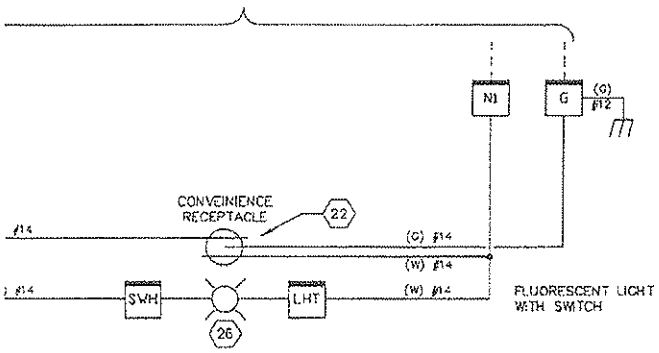

LIGHTING CIRCUIT

TION & ELECTRONICS, INC. CASPER WYOMING	TITLE: GILT EDGE MINE SITE RUBY GULCH PUMP STATION PLC CABINET WIRING DIAGRAM	CUSTOMER: ENERGY ELECTRIC	
		SHEET 2 OF 6	DRAWING NUMBER: D-22331
		JOB NO.: 8571-03	

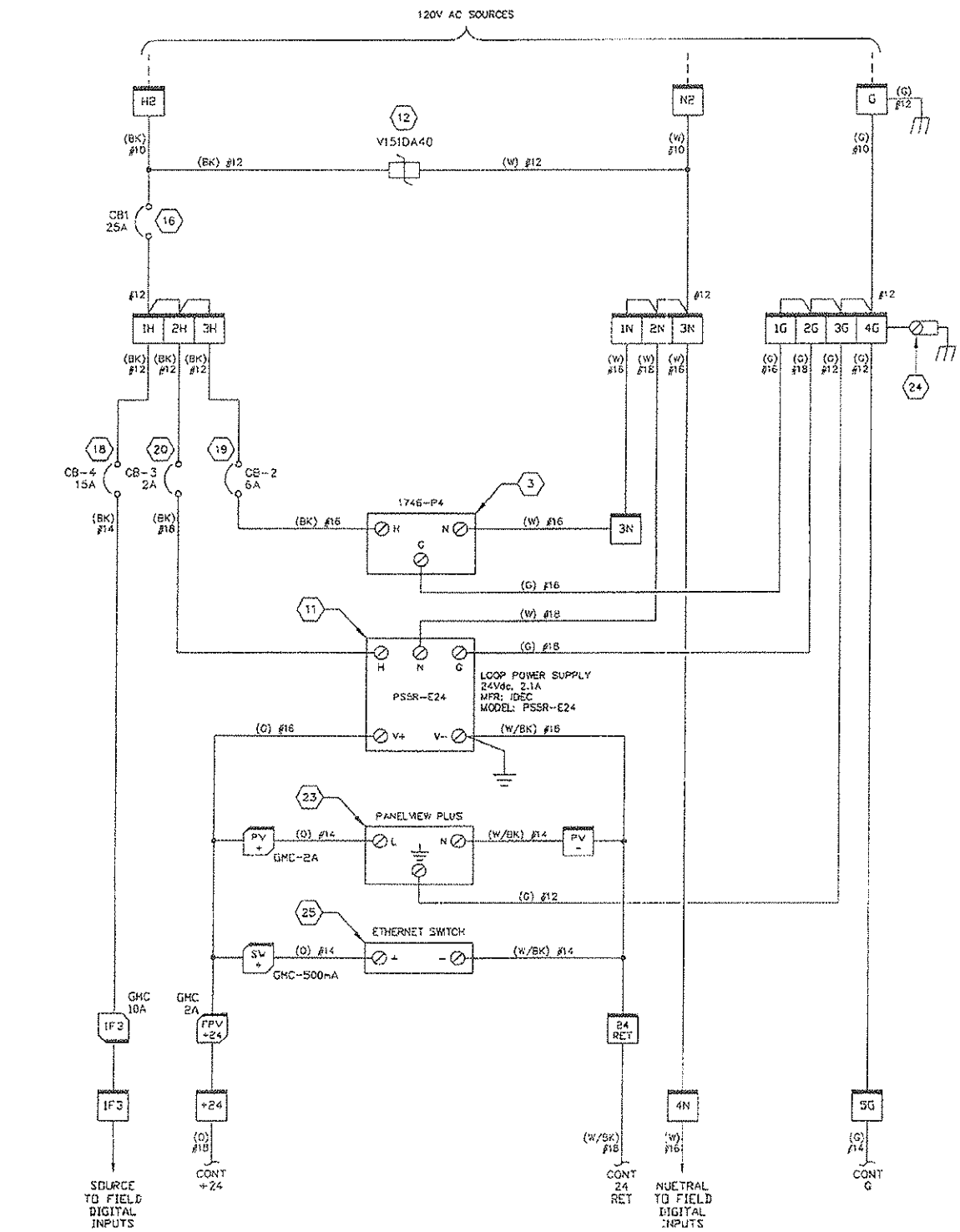

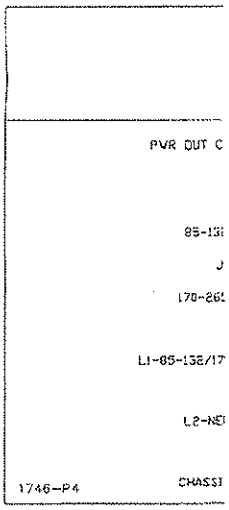

CAT 5 PA

CAT 5 PA

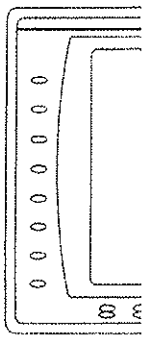

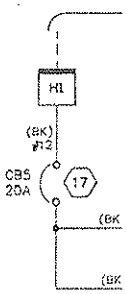

				DESIGNED	DRAFTED	IF THIS BAR DOES NOT EQUAL ONE INCH ADJUST SCALES ACCORDINGLY	This drawing is the exclusive property of Automation & Electronics, Inc., and is loaned to the recipient for their confidential use only. As consideration the recipient agrees that it will not be used in any manner detrimental to the interests of Automation & Electronics, Inc. also that it shall be returned upon request, and shall not be reproduced, disposed of, or altered in any way without the written consent of Automation & Electronics, Inc.	PHONE (307) 234-9311 FAX (307) 234-9438 WEBSITE: http://www.autoelect.com EMAIL: sales@autoelect.com	AUTOMA
				KH	RN				
				P.O. NO.:					
10/28/05	SHOP AS-BUILT	DL	RN						
DATE	REVISION	BY	DR.	SCALE: NONE					
FILE: D22331-2	DATE: 10/28/06								

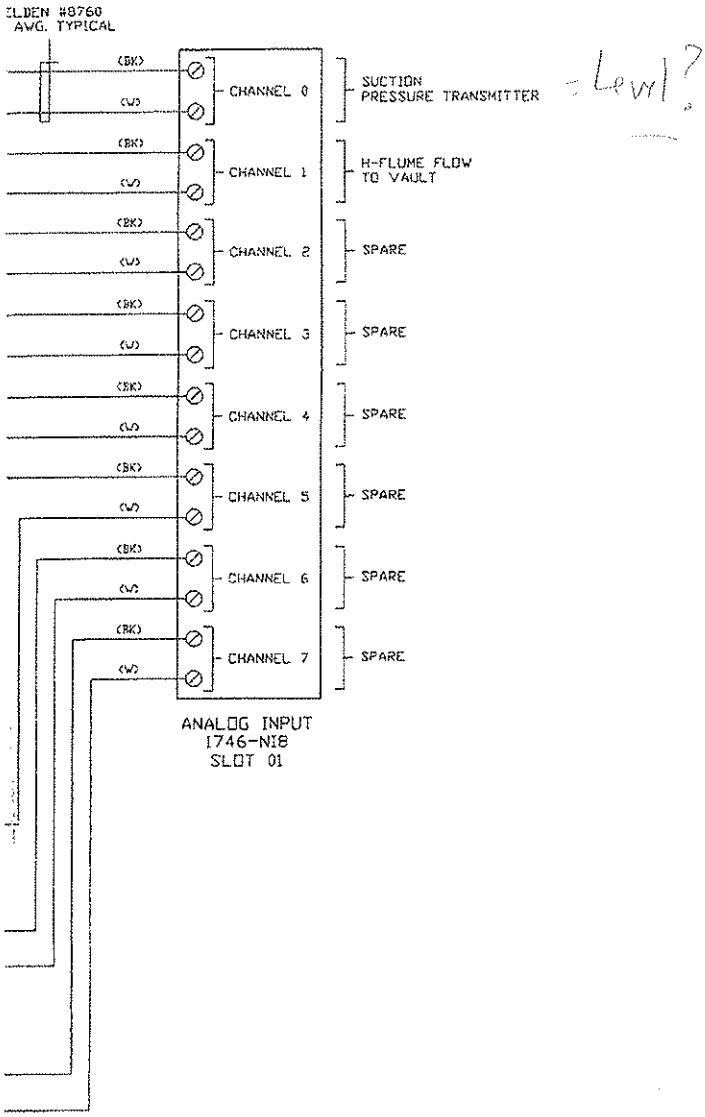

RUBY PLC CABINET

DI = DISCRETE INPUT
DO = DISCRETE OUTPUT
AI = ANALOG INPUT
AO = ANALOG OUTPUT

DI1 — * = SEQUENTIAL NUMBER
/00 — POINT OR CHANNEL

TERMINAL LABELING LEGEND

LEGEND:

- PLC TERMINAL BLOCK.
- DC FUSED TERMINAL BLOCK.
- AC FUSED TERMINAL BLOCK.
- FIELD TERMINAL BLOCK.

NOTE:

FIELD VERIFY ALL TERMINATION'S TO FIELD DEVICES WITH MANUFACTURERS LITERATURE.

3

TION & ELECTRONICS, INC. CASPER WYOMING	TITLE: GILT EDGE MINE RUBY GULCH PUMP STATION PLC CABINET WIRING DIAGRAM	CUSTOMER: ENERGY ELECTRIC	
		SHEET 3 OF 6	DRAWING NUMBER: D-22331
		JOB NO.: 8571-03	

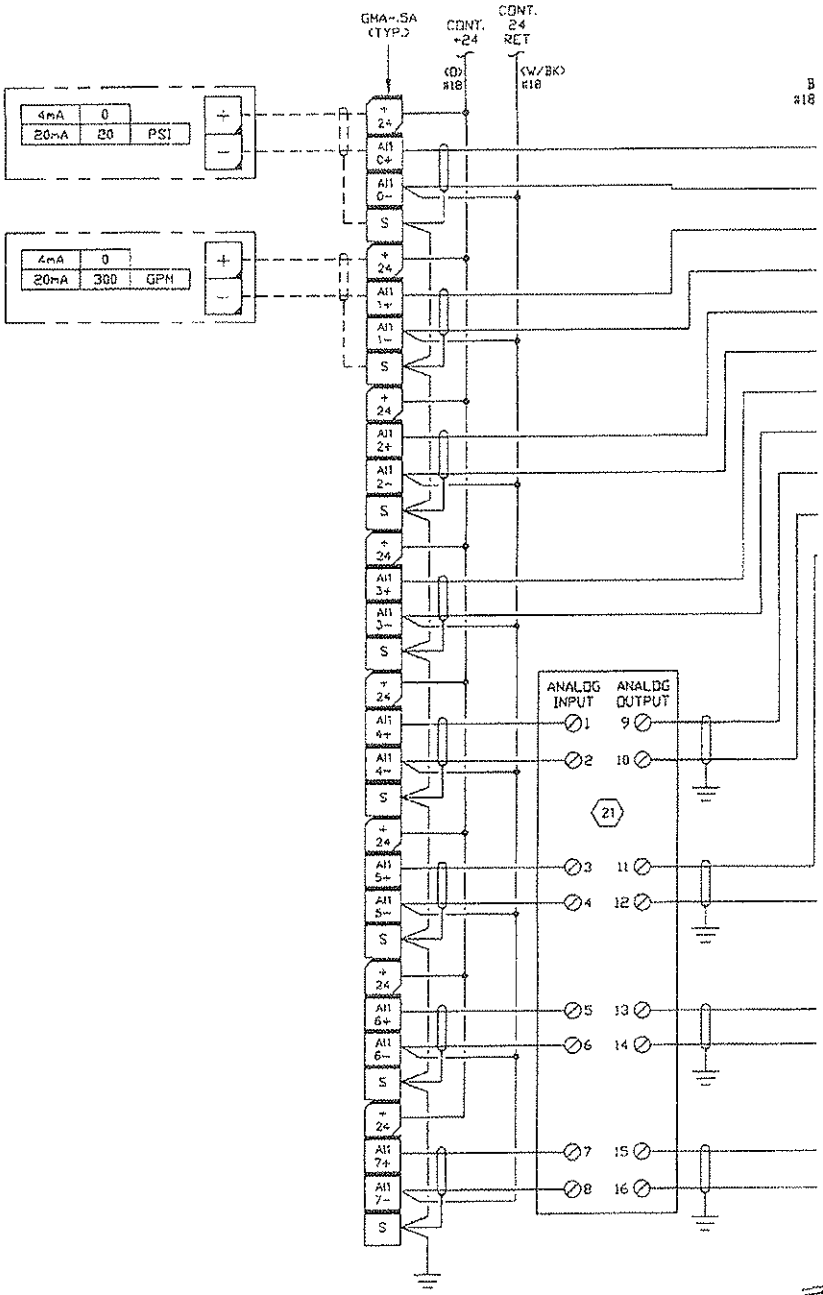

3

				DESIGNED KH	DRAFTED RN
2/21/06	FIELD UPDATE	BL	RN	P.O. NO.:	
10/26/05	SHOP AS-BUILT	BL	RN		
DATE	REVISION	BY	DR.	SCALE: NONE	
FILE: p22331-3	DATE: 2/21/06				

IF THIS BAR DOES NOT EQUAL ONE INCH ADJUST SCALES ACCORDINGLY

This drawing is the exclusive property of Automation & Electronics, Inc., and is loaned to the recipient for their confidential use only. As consideration, the recipient agrees that it will not be used in any manner detrimental to the interests of Automation & Electronics, Inc., also that it shall be returned upon request, and shall not be reproduced, disposed of, or altered in any way without the written consent of Automation & Electronics, Inc.

PHONE
(307) 234-9311
FAX
(307) 234-9438
WEBSITE:
http://www.autoelect.com
EMAIL:
sales@autoelect.com

AUTOMA

) +24 VDC

) DC COM

IOUT 0

ANL COM

IOUT 1

ANL COM

IOUT 2

ANL COM

IOUT 3

ANL COM

SPARE

LOG OUTPUT
.746-N041
SLOT 02

Ruby
PLC
CABINET

DI = DISCRETE INPUT
DO = DISCRETE OUTPUT
AI = ANALOG INPUT
AO = ANALOG OUTPUT

DI1 — * = SEQUENTIAL NUMBER
/00 — POINT OR CHANNEL

TERMINAL LABELING LEGEND

LEGEND:

- PLC TERMINAL BLOCK.
- DC FUSED TERMINAL BLOCK.
- AC FUSED TERMINAL BLOCK.
- FIELD TERMINAL BLOCK.

NOTE:

FIELD VERIFY ALL TERMINATION'S TO FIELD DEVICES WITH MANUFACTURERS LITERATURE.

4

TION & ELECTRONICS, INC. CASPER WYOMING	TITLE: GILT EDGE MINE SITE RUBY GULCH PUMP STATION PLC CABINET WIRING DIAGRAM	CUSTOMER: ENERGY ELECTRIC	
		SHEET 4 OF 6	DRAWING NUMBER: D-22331
		JOB NO.: 8571-03	

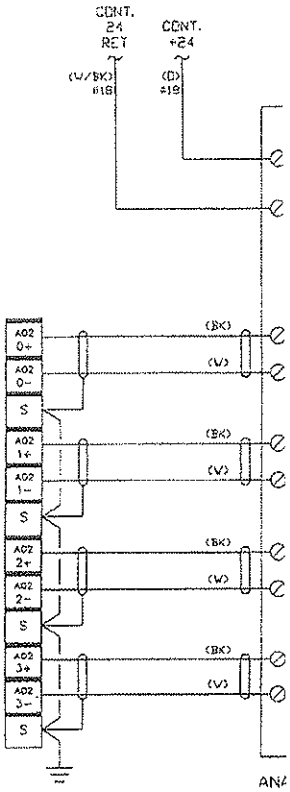

4

				DESIGNED: KH	DRAFTED: RN	IF THIS BAR DOES NOT EQUAL ONE INCH ADJUST SCALES ACCORDINGLY	This drawing is the exclusive property of Automation & Electronics, Inc., and is loaned to the recipient for their confidential use only. As consideration the recipient agrees that it will not be used in any manner detrimental to the interests of Automation & Electronics, Inc., also that it shall be returned upon request, and shall not be reproduced, disposed of, or altered in any way without the written consent of Automation & Electronics, Inc.
				P.O. NO.:			
10/28/05	SHOP AS-BUILT	BL	RN				
DATE	REVISION	BY	DR.	SCALE: NONE			
FILE: DSZ331-4	DATE: 10/26/05						

PHONE
(307) 234-9311
FAX
(307) 234-9438
WEBSITE:
http://www.autoelect.com
EMAIL:
sales@autoelect.com

AUTOMAT

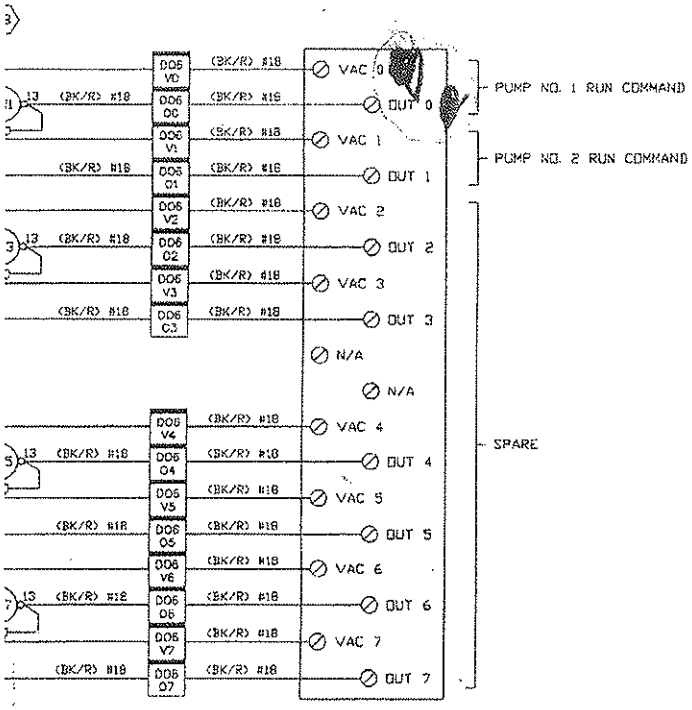

DISCRETE OUTPUT
1746-OX8
SLOT 06

DI = DISCRETE INPUT
DO = DISCRETE OUTPUT
AI = ANALOG INPUT
AO = ANALOG OUTPUT

DI1 — "DI" SEQUENTIAL NUMBER
/00 — POINT OR CHANNEL

TERMINAL LABELING LEGEND

RUBY PLC CABINET

LEGEND:

- PLC TERMINAL BLOCK.
- DC FUSED TERMINAL BLOCK.
- AC FUSED TERMINAL BLOCK.
- FIELD TERMINAL BLOCK.

5

ION & ELECTRONICS, INC. CASPER WYOMING	TITLE: GILT EDGE MINE SITE RUBY GULCH PUMP STATION PLC CABINET WIRING DIAGRAM	CUSTOMER: ENERGY ELECTRIC	
		SHEET 5 OF 6	DRAWING NUMBER: D-22331
		JOB NO.: 8571-03	

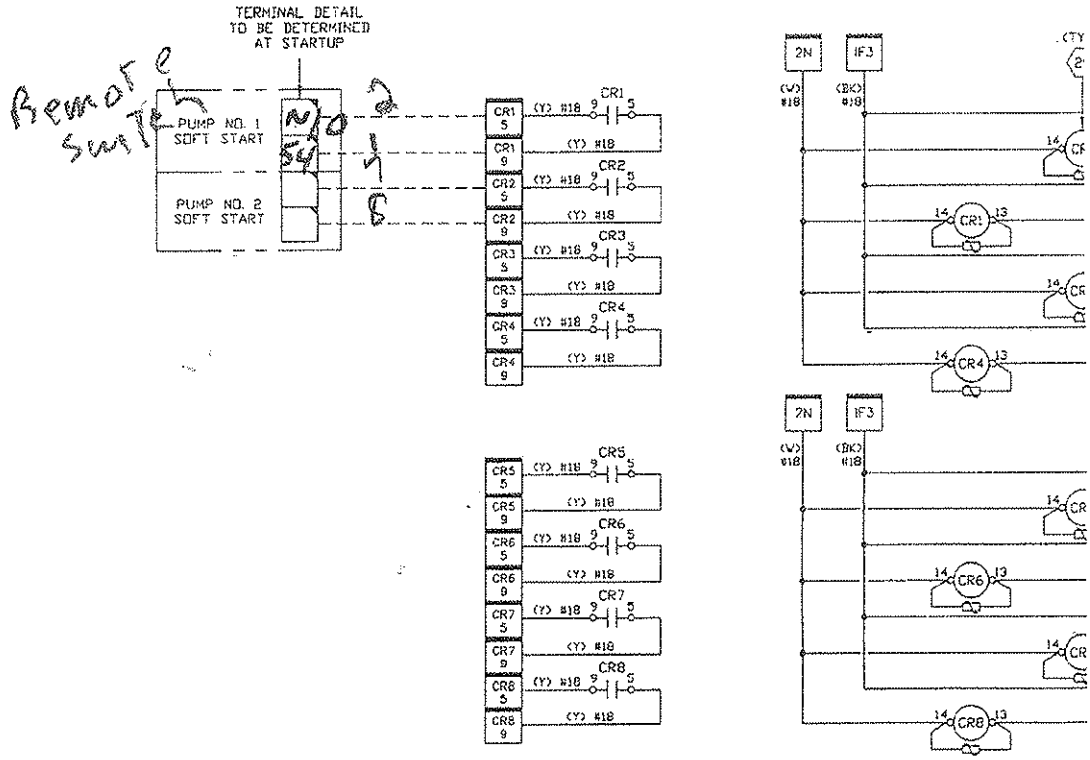

5

				DESIGNED KH	DRAFTED RN	IF THIS BAR DOES NOT EQUAL ONE INCH ADJUST SCALES ACCORDINGLY	This drawing is the exclusive property of Automation & Electronics, Inc., and is loaned to the recipient for their confidential use only. As consideration the recipient agrees that it will not be used in any manner detrimental to the interests of Automation & Electronics, Inc., also that it shall be returned upon request, and shall not be reproduced, disposed of, or altered in any way without the written consent of Automation & Electronics, Inc.	PHONE (307) 234-9311 FAX (307) 234-9438 WEBSITE: http://www.autoelect.com EMAIL: sales@autoelect.com	AUTOMAT
				P.O. NO.:			
2/21/06	FIELD UPDATE	BL	RN				
10/28/05	SHOP AS-BUILT	BL	RN				
DATE	REVISION	BY	DR.	SCALE: NONE			
FILE: D22331-5	DATE: 2/21/06						

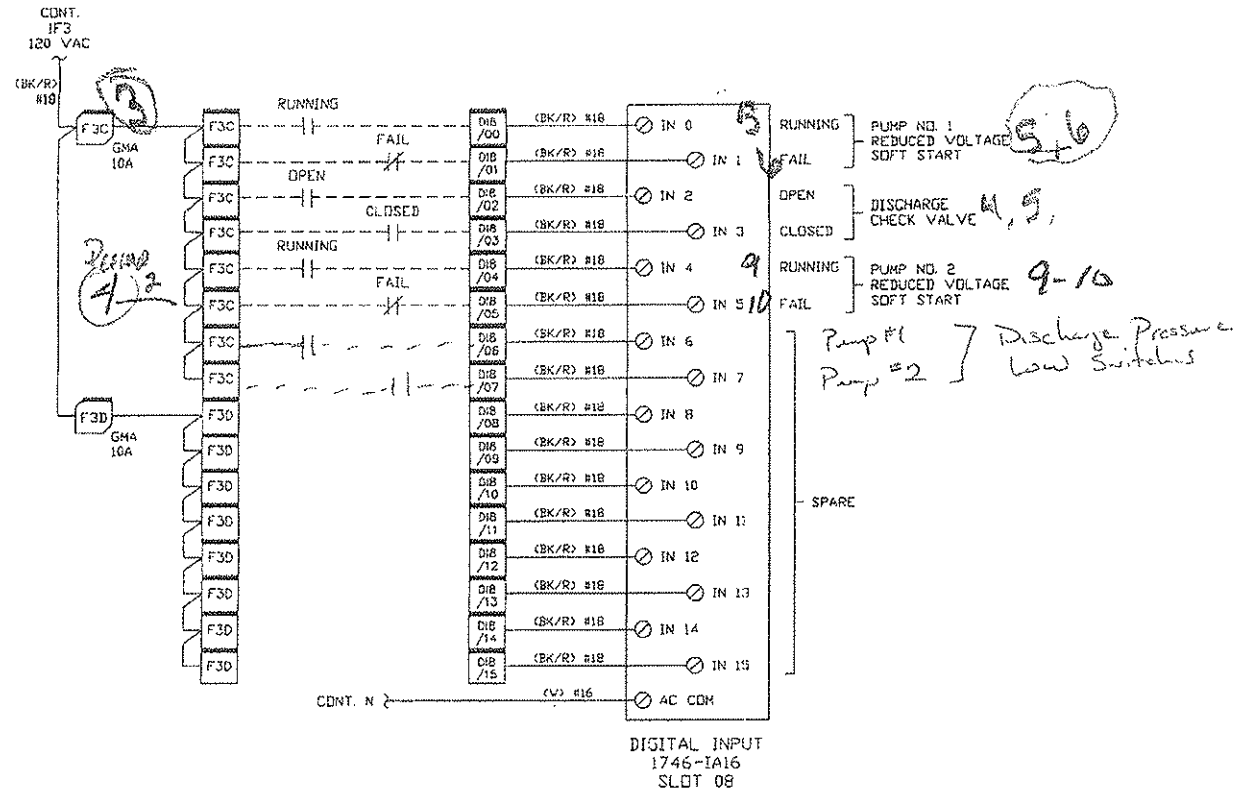

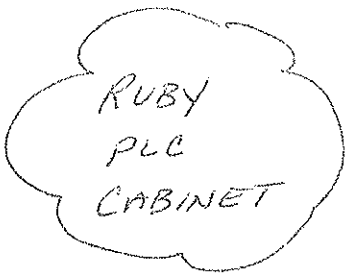

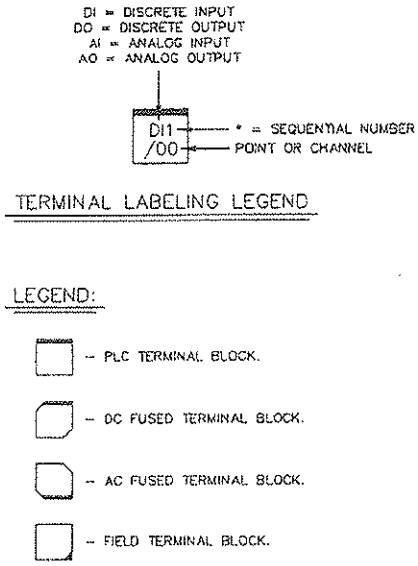

6

TION & ELECTRONICS, INC. CASPER WYOMING	TITLE: GILT EDGE MINE SITE RUBY GULCH PUMP STATION PLC CABIENT WIRING DIAGRAM	CUSTOMER: ENERGY ELECTRIC	
		SHEET 6 OF 6	DRAWING NUMBER: D-22331
		JOB NO.: 8571-03	

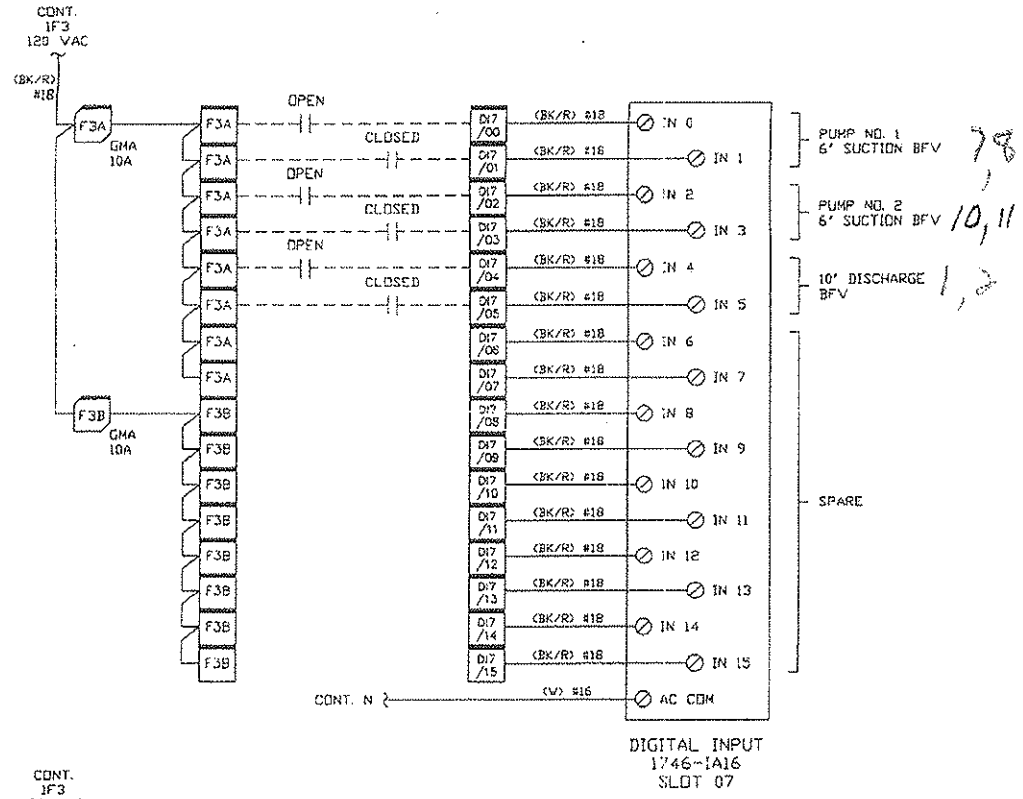

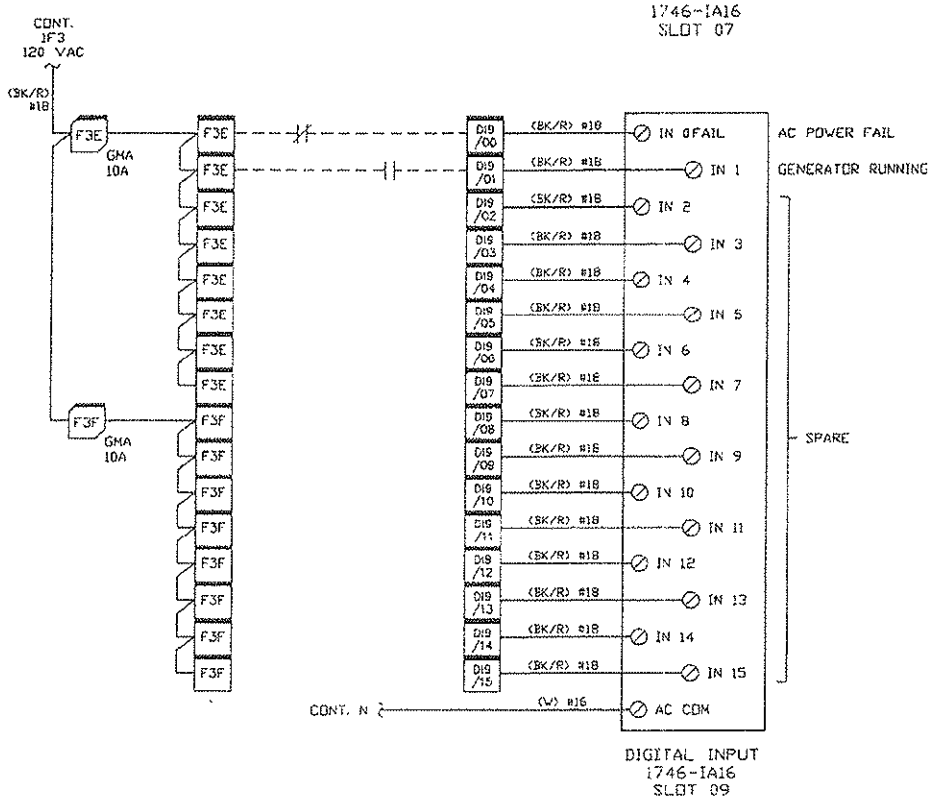

				DESIGNED: KH	DRAFTED: RN	IF THIS BAR DOES NOT EQUAL ONE INCH ADJUST SCALES ACCORDINGLY	This drawing is the exclusive property of Automation & Electronics, Inc., and is loaned to the recipient for their confidential use only. As consideration the recipient agrees that it will not be used in any manner detrimental to the interests of Automation & Electronics, Inc., also that it shall be returned upon request, and shall not be reproduced, disposed of, or altered in any way without the written consent of Automation & Electronics, Inc.
2/21/06	FIELD UPDATE	BL	RN	P.O. NO.:			
10/28/05	SHOP AS-BUILT	BL	RN				
DATE	REVISION	BY	DR.	SCALE: NONE			
FILE: D22331-6	DATE: 2/21/06						

PHONE
(307) 234-9311
FAX
(307) 234-9438
WEBSITE:
http://www.autoelect.com
EMAIL:
sales@autoelect.com

AUTOMA

STRAWBERRY PUMPHOUSE - 50 HP WTP FEED PUMP

Allen-Bradley

PowerFlex® 400

Adjustable Frequency AC Drive for Fan & Pump Applications

FRN 1.xx - 6.xx

User Manual

Rockwell Automation

STRAWBERRY Pump House - 50 HP WTP FEED Pump

PowerFlex 400 AC Drives

Drives, AC Low-Voltage

Compact Drives

- PowerFlex 525
- PowerFlex 4M
- PowerFlex 4
- PowerFlex 40
- PowerFlex 40P
- PowerFlex 400
- FanMaster Energy Saving Package
- Accessories
- Communications (DSI)

Quick Links

- Product Certifications
- Literature Library
- Training
- Migration Solutions
- Case Studies
- Newsletters & Magazines

Tools & Utilities

- Electronic Data Sheets (EDS)
- Firmware & Drivers
- Sample Code
- Selection & Configuration Tools
- Product Drawings

Get Support

How to Buy

Our Partners

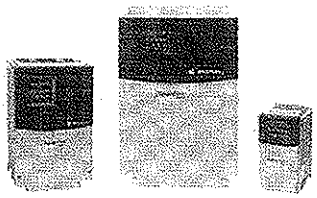

PowerFlex® 400 AC Drives are optimized for control of commercial and industrial fans and pumps. Built-in features such as purge and damper input provide a cost-effective solution for speed control in a broad range of variable torque fan and pump applications. An available packaged PowerFlex 400 Fan and Pump drive provides additional control, power, and enclosure options in standardized designs for a cost-effective solution for speed control in variable torque fan and pump applications

Overview Software Documentation Resources Accessories

Features

- Power ratings:
  - 200...240V: 2.2...37 kW / 3...50 Hp / 12...145 A
  - 380...480V: 2.2...250 kW / 3...350 Hp / 6...480 A
- NEMA/UL Type 1, 12, 3R, and 4 enclosures
- Flange-mount and panel-mount options
- V/Hz control, slip compensation, and PID control
- Internal RS 485, Common Industrial Protocol (CIP™), embedded Modbus® RTU, Metasys® N2, and Apogee® FLN P1 - plant floor network protocols
- Supports Drive Serial Interface (DSI) communication modules
- Drive overload protection, flying start, purge and damper input, hand/off/auto, and sleep/wake features
- Packaged drive options include disconnect and contactor bypass packages
- Available line reactor option
- Configuration and programming via integral keypad, remote keypad, DriveTools™ SP software, or DriveExplorer™ software
- Premier integration with PowerFlex AC drives uses the Logix control platform to simplify parameter and tag programming and reduces development time

Packaged HVAC Fan and Pump Drive Options

- Main input disconnect
- 3-contactor full bypass with disconnect
- 3-contactor basic bypass with disconnect

Products

- 22C PowerFlex 400 AC Drives
- 23C PowerFlex 400, Fan & Pump Packaged Drive

Certifications

- UL, cUL, CE, C-Tick, IEC (Designed to Meet), UL508C Plenum Rating

Certifications apply when product is marked. See our Product Certification site for Declarations of Conformity, certificates and other certification details.

Learn More

- Premier Integration of the Studio 5000™ Logix Designer application and PowerFlex® drives reduces development time by providing profiles, parameters and standardized tags, as well as copy and paste programming to simplify configuring multiple drives.
- Our industry expertise in Drives Systems Solutions can help you maximize machine availability and minimize project risk.
- Intelligent Motor Control Solutions can protect your investment, help optimize productivity and improve uptime
- The Integrated Architecture system provides the foundation to drive plantwide optimization efficiently and effectively

Copyright © 2013 Rockwell Automation, Inc. All Rights Reserved.

Installed 4/28/03

FT29

Possibly: ACB530-U1-18DA-4

BALDOR MOTORS AND DRIVES

Baldor Drives Center

"We Try Harder For The Customer"

E SIZE FINAL TEST
ID15H4150V-EO
H0302200018
H023/0381
FT29

STR PUMP HOUSE
150 HP DRIVE

Power Base ID = 1010 - 0001 - 1001

	STD CT	STD VT	QT CT	QT VT	PRESENT
CONT CUR. =	180.0	180.0	125.0	160.0	180.0 A RMS
PEAK CUR. =	300.0	207.0	240.0	184.0	300.0 A RMS
RATED PWM =	2.5	2.5	8.0	8.0	2.5 kHz

Current Scaling = 58.70 A/V
DC Bus Voltage = 664 V
Controller Temp = 23.7 C
Software = S15H-5.03

1790 RPM
60.5 Hz
443 V RMS
299.9 A RMS
0:00:23 Present Run Time

1790 RPM
60.5 Hz
440 V RMS
300.0 A RMS
0:30:16 Present Run Time

1790 RPM
60.5 Hz
445 V RMS
299.7 A RMS
1:00:44 Present Run Time

Motor EQ III XS
Toshiba Premium EFFICIENCY
Model A1503FLG3BSHD
Enc TEFC
Type TKKH
Form FCKI
Hp 150
Poles 2
Nema A
Phase 3
Volts 460
Hz 60
RPM 3575
Amp. 169
Ser No# 96210160
2003 lbs

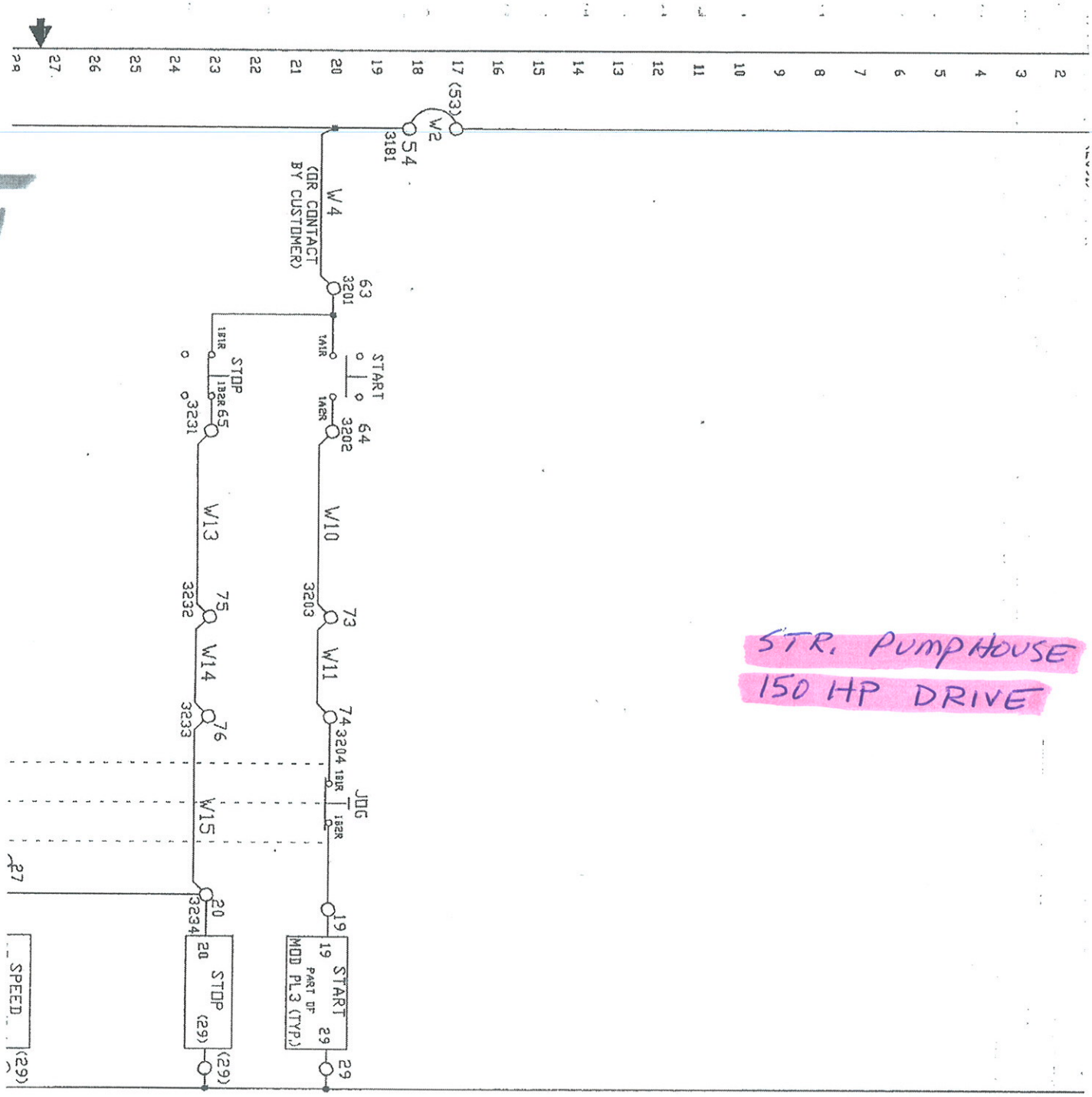

STR. PUMPHOUSE
150 HP DRIVE

PROJ. / ENG.	DR. ACAD / DATE 10-20-1994	ALLEN-BRADLEY A ROCKWELL INTERNATIONAL COMPANY MOTION CONTROL DIVISION	
MFG. ENG. / DATE	CK. / DATE	1336 DRIVE WITH OPTION	
APP'D. BY / DATE	APP'D. / DATE 10-25-94	EPP-R16-R23-R32-R51-150CB	
LOCATION ANAHEIM	REF. DAT V11 93M2214 / OPT V11 93M2214	AC V11 93M2214 / PVL V11 93M2214	
INDEX NO.	PLOTTED: 06:39:19 10-20-1994	INDEX NO. 1336.DWG V11 ECN 93M2214 PGM V11 93M2214	
SIZE B	DWG. NO. 5KVR179-0001	Page of	

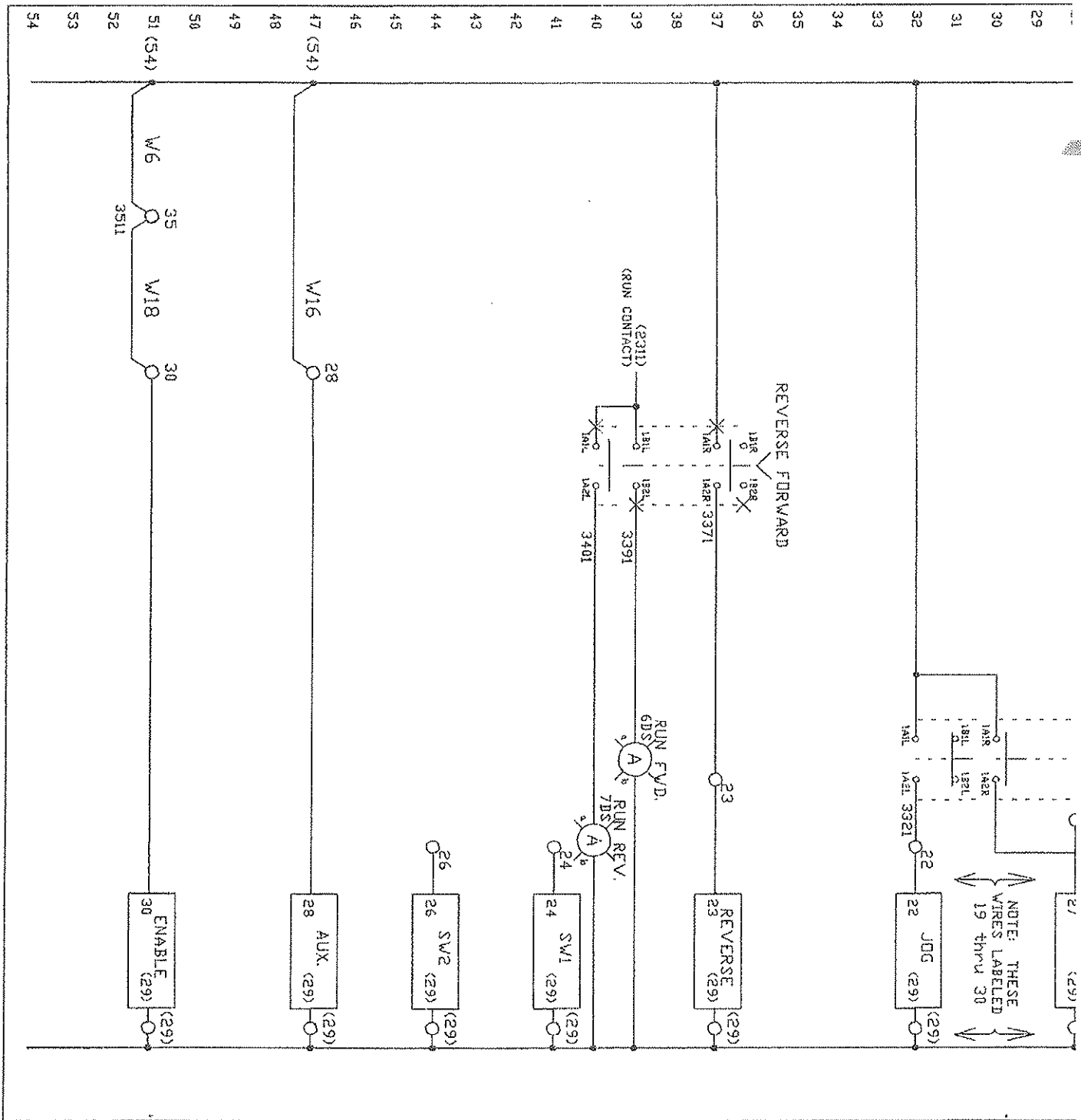

Order Information

Sold to:
CRUM ELECTRIC SUPPLY CO INC.

PO#:
551724

Notes:

10/20/94

Plot By:
F.HERNANDEZ (TEMSA)

REV.	BY	CK.	DATE	USED ON
				ECN NO.
				ECN NO.
				ECN NO.
				ECN NO.
				ECN NO.
				ECN NO.
				ECN NO.
01	ACAD	F.H.	10-20-1994	ECN NO. RELEASE

THIS DRAWING IS THE PROPERTY OF THE ALLEN-BRADLEY CO. INC. AND MAY NOT BE COPIED, USED OR DISCLOSED FOR ANY PURPOSE EXCEPT AS AUTHORIZED IN WRITING BY THE ALLEN-BRADLEY CO. INC.

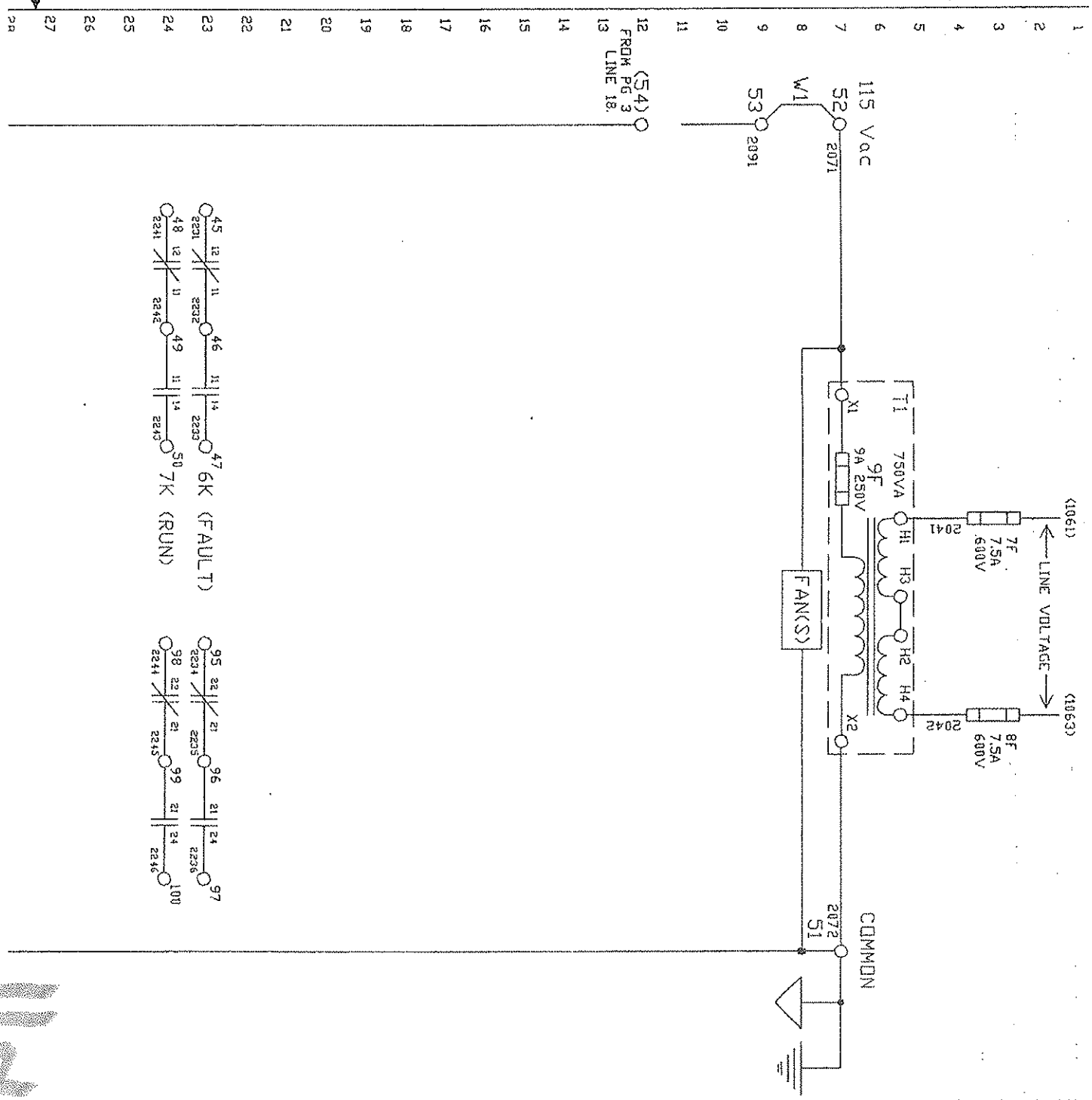

PROJ.	DR. ACAD	ALLEN-BRADLEY A ROCKWELL INTERNATIONAL COMPANY MOTION CONTROL DIVISION	
ENG.	DATE 10-20-1994		
REG. ENG.	CK.	1336 DRIVE WITH OPTIONS	
DATE	DATE	EPP-R16-R23-R32-R51-150CB	
APPR. BY	APPR.		
DATE	DATE 10-25-94		
LOCATION ANAHEIM	REF. DAT V11 93H2214	AC V11 93H2214	
	DPT V11 93H2214	PVL V11 93H2214	
INDEX NO.	PLOTTED: 06:39:19 10-20-1994	INDEX NO. 1336.DWG V11 ECN 93H2214 PGM V11 93H2214	SIZE B / DWG. NO. 5KVR179-0001 / Page of

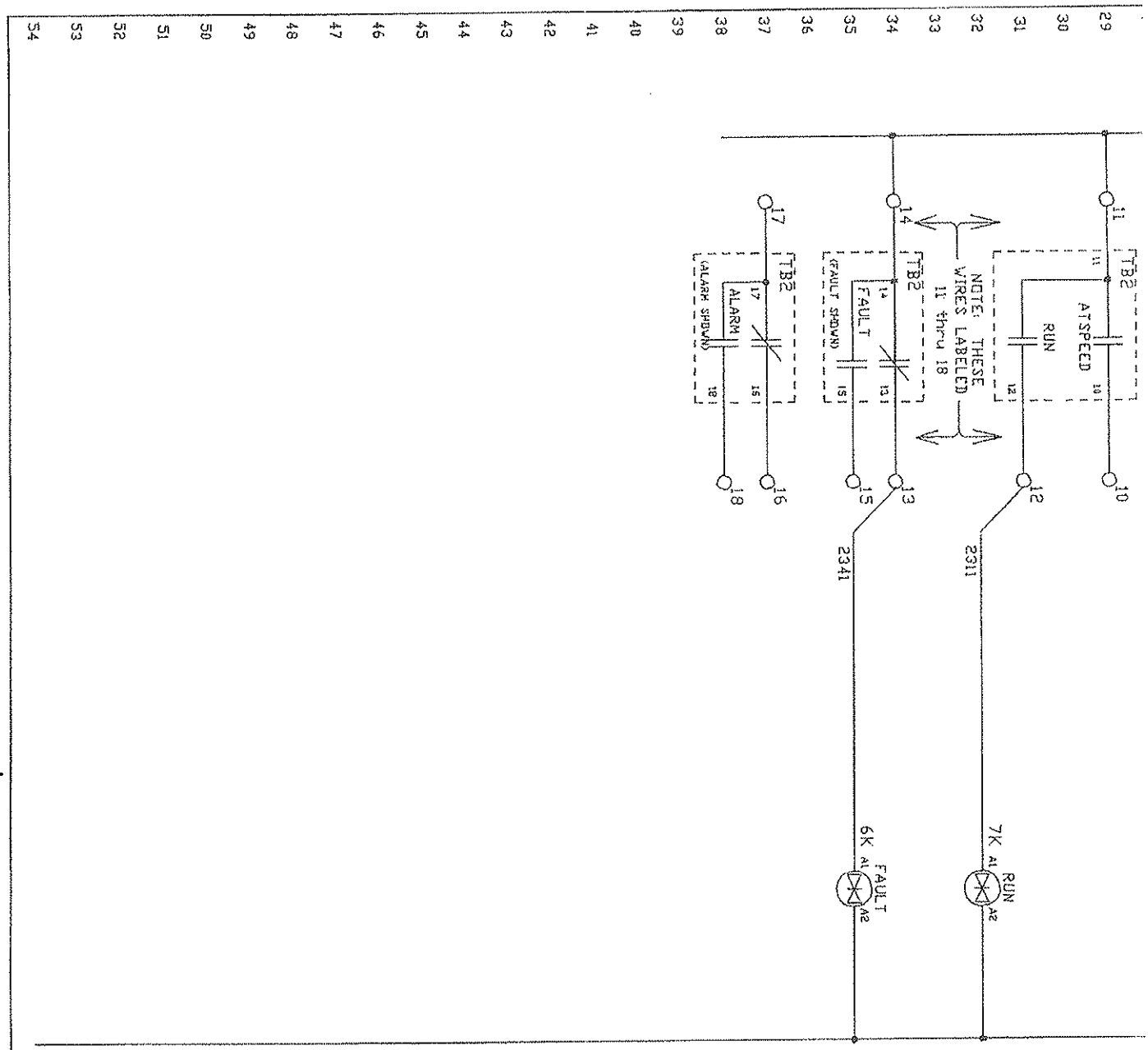

Order Information						
					ECN NO.	THIS DRAWING IS THE PROPERTY OF TI ALLEN-BRADLEY CO. IN AND MAY NOT BE COPIED, US OR DISCLOSED FOR ANY PURP EXCEPT AS AUTHORIZED IN WRITING BY THE ALLEN-BRADLEY CO. INC.
					ECN NO.	
Sold to: CRUM ELECTRIC SUPPLY CO INC.					ECN NO.	
PO#: 551724					ECN NO.	
Notes:					ECN NO.	
10/20/94					ECN NO.	
	01	ACAD	F.H.	10-20-1994	ECN NO. RELEASE	
Plot By: F.HERNANDEZ (TEMSA)	REV.	BY	CK.	DATE	USED ON:	

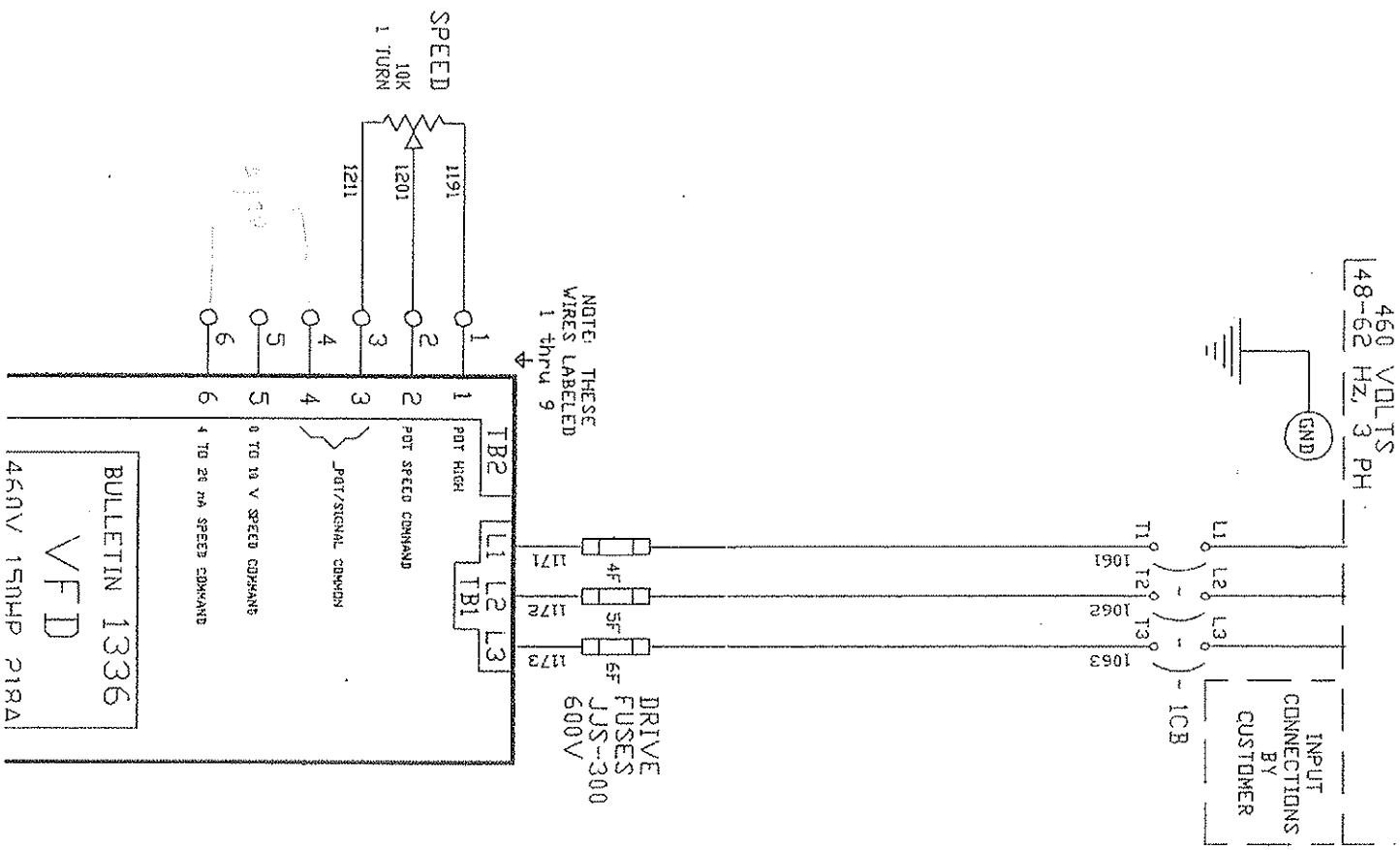

PROJ.	DR. ACAD	ALLEN-BRADLEY A ROCKWELL INTERNATIONAL COMPANY MOTION CONTROL DIVISION	
ENG.	DATE 10-20-1994		
MFG. ENG.	CK.	1336 DRIVE WITH OPTIONS	
DATE	DATE	EPP-R16-R23-R32-R51-150CB	
APPD. BY	APPD.		
DATE	DATE 10.25.94		
LOCATION ANAHEIM	RCP. BAT V11 93H2214	CWI AC V11 93H2214	
	OPT V11 93H2214	PWI PVL V11 93H2214	
INDEX NO.	PLOTTED: 06:39:19 10-20-1994	INDEX NO. 1336.DWG V11 ECN 93H2214 PGN V11 93H2214	SIZE B / DWG. NO. 5KVR179-0001 / Page of

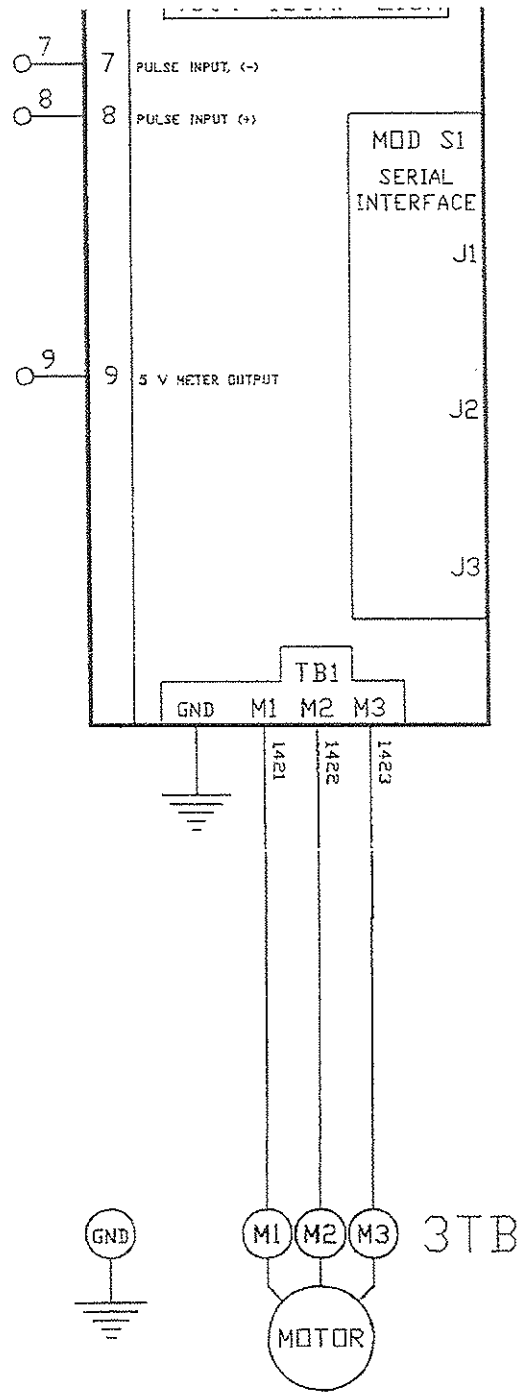

NOTES :

1 : O DENOTES 1TB

2 : ------ CUSTOMER CONNECTIONS

THIS DRAWING
IS THE PROPERTY OF THE
ALLEN-BRADLEY CO. INC.
AND MAY NOT BE COPIED, USED
OR DISCLOSED FOR ANY PURPOSE
EXCEPT AS AUTHORIZED
IN WRITING BY THE
ALLEN-BRADLEY CO. INC.

REV.	BY	CK.	DATE	
01	ACAD	F.H.	10-20-1994	ECN NO. RELEASE
				ECN NO.
				ECN NO.
				ECN NO.
				ECN NO.
				ECN NO.
				ECN NO.
				USED ON:

Order Information

Sold to: CRUM ELECTRIC SUPPLY CO INC.

PO#: 551724

Notes:

10/20/94

Plot By: F.HERNANDEZ (TEMSA)

South Dakota Dept. of Environment and Natural Resources
Industrial Wireless Data Communications Network
Gilt Edge Mine Superfund Site SCADA Improvements RFP

PART 1 GENERAL

1.01 SUMMARY

A. Section includes:
1. Wireless Network Equipment Supplier/Installer
2. Self-supporting Communications Tower
3. Wireless Network Equipment and Accessories
4. Installation and On-site System Start-up Services

B. Related Sections
1. Information related to this section appears throughout the Gilt Edge Superfund Site – Automation Improvements Request for Proposal.

1.02 REFERENCES

A. Referenced Standards:

1. Telecommunications Industry Association/Electronic Industries Alliance/American National Standards Institute (TIA/EIA/ANSI):
   a) 222-G, Structural Standards for Steel Antenna Towers and Antenna Supporting Structures.
2. Federal Communications Commission (FCC):
   a) 47 CFR 15 - Radio Frequency Devices, Section 15.247 - Operation within the bands 902 - 928 MHz, 2400 - 2483.5 MHz, and 5725 - 5850 MHz.
3. Institute of Electrical and Electronics Engineers, Inc. (IEEE): 802.3, Information Processing Systems - Local Area Networks - Part 3: Carrier Sense Multiple Access with Collision Detection (CSMA/CD) Access Method and Physical Layer Specifications.
4. National Fire Protection Association – National Electrical Code
   a) Article 820.93 - Grounding or Interruption of Metallic Sheath Members of Communications Cables

1.03 GENERAL SYSTEM SERVICE DESCRIPTION

A. This section describes the required build-out of what must be a highly reliable, easily maintainable, cost efficient wireless network capable of supporting the defined operational requirements of the Mine's Supervisory Control and Data Acquisition (SCADA) System. An RF engineering study was conducted to develop the detailed design parameters for a wireless network capable of reliably providing the specified levels of continuous wireless data communication between the various current and anticipated future automation, instrumentation, and video monitoring devices comprising the Gilt Edge Mine's SCADA system.

B. The communications network for this project must provide adequate network throughput capacity between numerous mine control, instrumentation, & video monitoring sites and two Master sites; the Office and the Water Treatment Plant. One of these sites, the Water Treatment Plant, is also a site for which a remote network control and video monitoring capability to/through the Office must exist. The Office site will also host a separate remote operator network access communications capability to be installed separately and which is outside the scope of this segment of the project.

C. Accordingly, this industrial wireless data communications system must provide a throughput capacity robust enough to accommodate Ethernet SCADA/control system communications from/to/between all sites on the network while simultaneously carrying live video feeds from multiple control/monitoring site IP video cameras to the Water Treatment Plant and/or the Office; and, from a video camera located within the Water Treatment Plant to the Office.

1.04 RADIO EQUIPMENT SUPPLIER / INSTALLER

A. This project requires the services of a pre-qualified Radio Equipment Supplier and Installer:
   1. Acceptable Supplier/Manufacturers are:
      a. H-C Galloways, Rapid City, SD (605) 786-6155
      b. Dakota Pump Inc, Rapid City, SD (605) 996-6636.
      c. Ehresmann Engineering, Yankton, SD (605) 665-7532
      b. Or “Approved Equal”.
   2. For full consideration of “Approved Equal” manufacturers, additional information must be provided ten days prior to bid opening. Additional information to be provided shall include the following:
      a. A description of company organization, listing types and numbers of registered engineers, other engineers, technicians and other technical employees, production staff and plant production capabilities, lead-times, etc.
      b. A list of insurance carried for:
         a. Professional liability "errors and omissions",
         b. General liability
         c. General business insurance.
         d. Provide carrier, terms for each type, and limits of insurance.

B. The naming of pre-qualified suppliers/manufacturers of equipment in this Specification is not intended to eliminate competition or prohibit qualified manufacturers from offering equipment. Rather, the intent is to establish a minimum standard of quality, and to indicate a principle of operation desired for this project. Other manufacturers of similar equipment are encouraged to submit for prior approval. However, in the event of an adverse decision, no claim of any sort or kind shall be made against the Owner or Engineer.

1.05 PRIOR APPROVAL REQUIREMENTS FOR EQUIPMENT OR MATERAL

A. The Contractor, Supplier, or Manufacturer's Representative must submit any proposed alternate substitute or substitute system manufacturers, specific alternate equipment and proposed alternate material for consideration prior to bidding.

B. Approval by Engineer applies to quality and general arrangement only. The Contractor is responsible for quantities, sizes, and space requirements.

C. No extension of project completion date will be allowed for consideration or erection of prior approved systems, equipment, or material.

D. Proposed alternates or substitutions requirements shall include, but not be limited to, the following:
   1. Full description and performance data on all proposed items with references for verification of performance for identical equipment presently in service.
   2. Detailed description of how the proposed system equipment and material differs from that specified including, but not limited to, material of construction/fabrication, functionality and operational performance specifications, warranty, service & repair availability, environment suitability and corrosion protection, maintenance requirements, etc.
   3. Detailed discussion of how the proposed system, equipment or material is equal or superior to that specified in construction/fabrication, functionality and operation, warranty, service & repair availability, environment suitability and corrosion protection, maintenance requirements, etc.

E. Two (2) copies of prints showing in detail, any changes in arrangements for materials, equipment, fabrication, erection, maintenance, etc.

F. Name and telephone number(s) of contact person(s) to answer questions or furnish additional information concerning proposed alternate or substitute equipment and material.

G. Equipment and material that are approved will be indicated by addendum in time for all bidders to fully consider such prior approvals. Bidders shall include all changes necessary to meet Specifications.

1.06 MANUFACTURER'S DATA AND DRAWINGS

A. The selected supplier/manufacturer shall submit Six (6) complete sets of "As Built" shop drawings for Engineer's approval as follows:
   1. Dimensioned Drawings.
   2. Descriptive Data.
   3. Installation Instructions.
   4. All other information that the supplier/manufacturer feels will assist the Engineer and the Owner for operation and maintenance.
   5. The Engineer expects no more than one initial review and one re- review of the shop drawings. The cost for subsequent re-submittal reviews will be charged to the Contractor at the Engineer's hourly rate.

1.07 PRODUCT DELIVERY, STORAGE AND HANDLING

A. Deliver equipment in manufacturer's original, unopened cartons.

B. Cover and store equipment to prevent damage.

C. Handle so as to prevent damage during installation.

PART 2 PRODUCTS

2.01 COMMUNICATIONS TOWER

A. Design
1. The radio system supplier shall provide tower structural and foundation designs, certified by a Professional Engineer licensed in South Dakota.
   a. Design shall be in accordance with ANSI/TIA-222-G, with design loads for the location of tower installation, including the anticipated loads as outlined in paragraph 2.02 of this section.
   b. Provide certified design stamped by a registered professional engineer (PE) in SD. Design shall include documentation showing tower face widths, member sizes, tower steel weights and base reactions.
2. Design Parameters:
   a. 80 MPH wind no ice.
   b. 60 MPH wind with ½ inch radial ice on all exposed tower, feedline and antenna surfaces.
   c. Structure Class II.
   d. Wind Exposure: “C”, open spaces.
   e. Topographic Category 1, flat or rolling.

B. Required Towers
1. Anchor Hill Pit Area - Free-standing/Self Supporting, 40 foot AGL referencing the grade of the service road at the point nearest the tower.
   a. Site Location: approximately 80 feet South of the service road leading to Anchor Hill and 40 feet North of an existing 30’ height wooden 13.5 kV power line pole. This location lies between an existing ground depression and an intended ground reclamation project boundary. Site will require some preparatory leveling.
      1) Lat/Long: 44° 19’ 56.94” N, 103° 40’ 32.86” W
      2) Tower center will be staked by Engineer/site staff.
   b. Site Electrical Power.
      1) 13.5 kV electrical power is available at the above described utility pole approximately 40 feet to the south of the communications tower site. Radio System Installer shall be responsible for providing AC power to the tower site.
      2) Coordinate with General Customer Service at Black Hills Power (800) 839-8197 and the Gilt Edge Mine staff for the installation of the appropriate distribution line electrical transformer and service/meter panel. (See Attachment A for Black Hills Power estimate.)

3) Extend AC power from the utility pole service/meter panel to the Anchor Hill Pit communications tower Repeater panel via buried conduit.

C. Tower Design

1. Hot dipped galvanized steel construction, 3 leg solid round or angle member triangular tower, minimum face width - 24 inches.
2. Tower to be provided with a welded embed section designed:
   a) to be installed in foundation.
   b) to allow for attachment of standard tower sections.
   c) to adequately transfer tower loads to foundation as required.
3. Tower construction to provide integrated and welded climbing and cable ladders. Bolt-on climbing or cable ladders will be unacceptable.
   a. Cable ladder shall be configured to provide a minimum of six (6) snap-in and/or (6) bolt-in hangers.
   b. Climbing and cable ladders to extend the full height of the tower.
4. Tower and foundation shall have 25% reserve capacity remaining above and beyond listed loads (maximum initial utilization of 75%).

5. Geotechnical Investigation
   a. Tower foundation design to be based on “presumptive soils” as defined by TIA-222-G.
   b. Upon award, tower supplier will be responsible for obtaining a geotechnical investigation or “Soils Analysis” of the soils at the intended tower site. At a minimum, the soils report must include:
      1) A minimum of one Standard Penetration Test (SPT) boring to a depth of at least 20 feet below ground level depending upon site specific soil conditions. Depth of water below grade (if present) must be noted and included in the report.
      2) In-situ soils information as determined by changes in soil type and density. The following findings should be included for each soil type encountered:
         a) Unit weight of soil
         b) Water content
      3) Unified Soil Classification and Atterberg Limits testing as determined by changes in soil type and density.
      4) Recommendations for soil bearing capacity. The soils analysis report must include –
         a. Allowable net bearing pressure for mat design
         b. Required depth of foundation to prevent frost movement
         c. Allowable skin friction for caisson design
         d. Ultimate cohesion
         e. Allowable end bearing for caisson design
         f. Angle of soil friction
         g. Summary of what safety factors were used
      5) If a special situation is encountered, such as finding rock at a shallow depth, additional information is needed –
         a) Rock quality
         b) Unit weight of rock

c) Shear angle of rock
d) Grout to rock bond strength

c. Tower supplier will be responsible for submitting the results of the geotechnical analysis to the Engineer, along with a Change Order Request for tower foundation redesign, should the geotechnical analysis indicate weaker than “presumptive soils” values at this tower site.
d. No change order for foundation redesign will be required or approved should the geotechnical analysis indicate “presumptive soils” values or better exist at this tower site.

6. Design antenna loading shall include:
   a. Tower Orientation – climbing ladder face oriented North.
   b. One (1), 11’ x 2 3/8” OD fiberglass encapsulated Omnidirectional antenna mounted at approximately, but not less than, 40’ (on tapered tower top) fed with ½” rigid coaxial feedline.
   c. One (1), compact radome enclosed directional antenna mounted at 35 feet, oriented to 173° and fed with ½” rigid coaxial feedline.
   d. One (1), 48” x 18” parabolic grid type antenna mounted at approximately 30 feet, oriented to 97° and fed with ½” rigid coaxial feedline.
7. Tower submittal drawings to include tower and foundation designs stamped by a profession engineer licensed within the state of South Dakota. Design documents shall include a cover sheet which clearly indicates tower face widths, member sizes, tower steel weights and base reactions.

D. FCC and FAA Registration.

FCC and FAA Registration as required shall be the responsibility of the tower supplier. Any lighting and/or painting requirements shall be communicated to the Engineer immediately upon discovery in order to coordinate with various other trades. (I.E. Electrical service if tower lighting is required by FAA)

E. Accessories & Freight
1. Tower to be provided with a cable type safety climb system on the climbing face to the full height of the tower.
   a. Tower to be provided with ninety (90) degree cable guide brackets installed in opposing directions at 15 and 30 foot levels.
   b. Tower to be provided with one (1) cable grab carriage, suitable and designed for use with the associated system, furnished by the manufacturer of tower and turned over to the Owner upon project completion.
2. Grounding System shall be EIA standard compliant, additionally defined for this tower as consisting of one (1) 10 foot long ground rod, placed radially from each of the three (3) tower members, at a minimum spacing of 10 feet.
   a. Tower supplier to permanently bond Individual ground rods to their corresponding tower leg with 2/0 bare stranded copper lead.

b. Tower supplier shall additionally interconnect each tower leg's ground rod with a 2/0 stranded copper ground loop installed around tower foundation and attached to the individual ground rods with non-reversible connections.

3. Tower to include freight charges for tower to installation site with an expected early delivery requirement for embed section.
   a. If suitable material handling equipment is available on site when the tower is delivered, mine staff MAY – depending on immediate operational requirements, and at their sole discretion – be available to assist with the offloading of the tower upon delivery. Otherwise, tower supplier shall be responsible for tower offload.

F. Manufacturer/Model:
   1. Ehresmann Engineering, Yankton, SD.
   2. Prior-approved equal.

2.02 ANTENNA SYSTEMS

A. Omnidirectional Antenna

1. Specifications:
   a. Frequency Range: 870-960 MHz, factory optimized for service in the 902 - 928 MHz ISM band – copy of factory Passive Intermodulation Testing (PIM) report verifying retuning to be provided to Engineer.
   b. Polarization: Vertical
   c. Gain: 10 dBd
   d. Impedance: 50 Ohms
   e. VSWR: =/< 1.43:1
   f. Input Power Rating: 500W
   g. Radiation Pattern:
      1) Horizontal: 360°
      2) Vertical: 7°
      3) Electrical downtilt: 1.25
      4) Null fill: 5%
   h. Lightning Protection: Direct Ground
   i. Connector Type: Extended N-Female
   j. Wind Speed Rating: 125 mph
   k. Wind Load @ 100 mph: 73 lbf
2. Manufacturer/Model:
   a. Amphenol Antel BCD-87010
   b. Prior-approved equal.
3. Antenna to be mounted per manufacturer's specifications using appropriately sized heavy duty galvanized steel mounting hardware.
4. Omnidirectional antenna to be furnished and installed at the following site(s):
   a. Anchor Hill Communications Tower – mounted vertically on tapered tower top section of tower.

B. Wide-Angle Panel Antenna

1. Specifications:
    a. Frequency Range: 806-960 MHz
    b. Polarization: Vertical
    c. Gain: 10.5 dBd
    d. Impedance: 50 Ohm
    e. VSWR: =/< 1.4:1
    f. Input Power Rating: 300W
    g. Radiation Pattern:
        1) Horizontal: 120°
        2) Vertical: 15°
        3) Electrical downtilt: 0
        4) Null fill: 5%
    h. Lightning Protection: Direct Ground
    i Connector Type: Extended N-Female
    j. Wind Speed Rating: 140 mph
    k. Wind Load @ 100 mph: 65 lbf
2. Manufacturer/Model:
    a. Amphenol-Antel
    b. Prior-approved equal.
3. Mounting Accessories:
    a. Wide-angle Panel Antenna Mounting Hardware
        1) 2-Point Mounting and Downtilt Bracket Kit, Amphenol-Antel part number: 21699999.
        2. Prior-approved equal.
4. Wide-angle Panel Antenna to be furnished and installed at the following site(s):
    a. Water Treatment Plant
        1) Antenna to be mounted vertically to galvanized steel 2 3/8” OD x 96” antenna mounting mast.
        2) Antenna mounting mast in turn to be mounted to WTP lime silo railing using stainless or galvanized steel clamps (x2) such that antenna center-beam is at a height of ~63’ AGL.
        3) Antenna to be oriented to 132°.

C. Half-Parabolic Grid Antenna

1. Specifications:
    a. Frequency Range: 806-960 MHz
    b. Polarization: Vertical or Horizontal
    c. Gain: 14 dBd
    d. Front-to-back Ratio: >23 dB
    e. Impedance: 50 Ohm
    f. VSWR: =/< 1.5:1
    g. Input Power Rating: 100W
    h. Radiation Pattern – Horizontal Polarization:
        1) Horizontal: 30°
        2) Vertical: 16°
    g Connector Type: N-Female

h. Wind Speed Rating: 100 mph

2. Manufacturer/Model:
   a. Kathrein-SCALA MF-900B
   b. Prior-approved equal.
3. Mounting Accessories:
   a. Mounting Hardware
      1) Mounting Kit, for 2.375” OD mast – Kathrein-SCALA part number: MKPX-2.
      2. Prior-approved equal.
4. Half-parabolic Grid Antenna to be furnished and installed at the following site(s):
   a. Anchor Hill Communications Tower
      1) Antenna to be mounted horizontally polarized to northeast tower leg.
      2) Antenna to be oriented to 96°.
   b. Water Treatment Plant
      1) Antenna to be mounted horizontally polarized to galvanized steel 2 3/8” OD x 72” antenna mounting mast.
      2) Antenna mounting mast in turn to be mounted to WTP lime silo railing using stainless or galvanized steel clamps (x2) such that antenna center-beam is at a height of ~63’ AGL.
      3) Antenna to be oriented to 276°.

D. ENCLOSED LOG-PERIODIC ANTENNA

1. Specifications:
   a. Frequency Range: 800-1000 MHz
   b. Polarization: Vertical
   c. Gain: 8 dBd
   d. Front-to-back Ratio: 25 dB
   e. Impedance: 50 Ohm
   f. VSWR: =/< 1.5:1
   g. Input Power Rating: 100W
   h. Radiation Pattern:
      1) Horizontal: 90°
      3) Vertical: 33°
   i Connector Type: N-Female
   j. Wind Speed Rating: 85 mph
2. Manufacturer/Model:
   a. Sinclair SP440
   b. Prior-approved equal.
3. Mounting Accessories:
   a. Mounting Hardware
      1) Clamp set for 2.375” OD mast – Sinclair part number: 130 (Included).
      2) Universal One-legged Mount – Rohn part number 1LG.
      3) Fabricated 15’ Antenna Mounting Mast assembly, consisting of:

a) (1) 2”x10’ Schedule 80 galvanized steel pipe, threaded on one end, male NPT.
b) Galvanized 2”x1 1/2” female steel pipe reducing coupling, NPT.
c) (1) 5’ Schedule 80 galvanized steel pipe, threaded on both ends, male NPT.
d) (1) Galvanized steel pipe cap, 1.5” NPT.

4) Prior-approved equal.

4. Enclosed Log-periodic Antenna to be furnished and installed at the following site(s):

a. Office

1) Antenna to be clamped to accessory Universal One-Legged Mount.

2) Antenna Universal One-Legged Mount in turn to be mounted to Office exterior wall using appropriate stainless or galvanized steel fasteners such that antenna center-beam is at a height of ~15’ AGL.

3) Antenna to be oriented to 353°.

b. Anchor Hill Communications Tower

1) Antenna to be clamped to south tower leg such that antenna center-beam is at a height of ~35’ AGL.

2) Antenna to be oriented to 173°.

c. Sunday Pit

1) Antenna to be clamped to accessory Universal One-Legged Mount.

2) Antenna Universal One-Legged Mount in turn to be mounted to existing wooden utility pole using appropriate stainless or galvanized steel fasteners such that antenna center- beam is at a height of ~15’ AGL.

3) Antenna to be oriented to 331°.

d. Strawberry Pond

1) Antenna to be clamped to accessory Fabricated 15’ Antenna Mounting Mast.

2) Fabricated 15’ Antenna Mounting Mast in turn to be appropriately, securely, and in keeping with generally accepted best practices, affixed to existing steel sided shed using appropriate stainless or galvanized steel hardware and fasteners.

3) Antenna to be oriented to 348°.

e. Anchor Hill Pit

1) Antenna to be clamped to accessory Fabricated 15’ Antenna Mounting Mast.

2) Fabricated 15’ Antenna Mounting Mast in turn to be appropriately, securely, and in keeping with generally accepted best practices, affixed to existing electrical panels using appropriate stainless or galvanized steel hardware and fasteners.

3) Antenna to be oriented to 123°.

E. RADOME PROTECTED YAGI ANTENNA

1. Specifications:
    a. Frequency Range: 890-960 MHz
    b. Polarization: Vertical or Horizontal
    c. Gain: 12 dBd
    d. Front-to-back Ratio: >20 dB
    e. Impedance: 50 Ohm
    f. VSWR: =/< 1.5:1
    g. Input Power Rating: 100W
    h. Radiation Pattern – Vertical Polarization:
        1) Horizontal: 48°
        2) Vertical: 40°
    i Connector Type: N-Female
    j. Wind Speed Rating: 120 mph
2. Manufacturer/Model:
    a. Kathrein-SCALA RY-900B
    b. Prior-approved equal.

3. Mounting Accessories:
    a. Mounting Hardware
        1) Mounting Kit, for 2.375” OD mast – Kathrein-SCALA part number: MKPS-1.
        2) Fabricated Heavy Duty Antenna Wall Mount assembly, consisting of:
            a) (1) Cantilever Wall Mount, Site Pro 1 part number SP250.
            b) 2”x4’ Schedule 80 galvanized steel pipe.
        3) Heavy Duty Wood Pole Antenna Mount assembly, consisting of:
            a) (1) Through-bolt type pipe clamp set, Sinclair part number CLAMP017A.
            b) (1) 2”x24” Schedule 80 galvanized steel pipe.
        4) Prior-approved equal.
4. Radome Protected Yagi Antenna to be furnished and installed at the following site(s):
    a. Ruby Repository
        1) Antenna to be clamped to accessory Fabricated Heavy Duty Antenna Wall Mount assembly.
        2) Fabricated Heavy Duty Antenna Wall Mount assembly in turn to be appropriately, securely, and in keeping with generally accepted best practices, affixed to exterior wall using appropriate stainless or galvanized steel hardware and fasteners such that antenna center-beam is at a height of ~15’ AGL.
        3) Antenna to be oriented to 253°.
    b. Hoodoo Gulch
        1) Antenna to be clamped to accessory Heavy Duty Wood Pole Antenna Mount assembly.

2) Heavy Duty Wood Pole Antenna Mount assembly in turn to be mounted to existing wood utility pole such that antenna center-beam is at a height of ~15' AGL.
3) Antenna to be oriented to 11°.

F. GPS TIMING REFERENCE ANTENNA ASSEMBLY

1. Antenna Element Electrical Specifications:
   a. Frequency Range: 1575.42 +/- 10 MHz
   b. Amplifier Gain: 3.5 dBic
   c. Impedance: 50 Ohm
   d. VSWR: =/< 1.5:1
   e. Polarization: Right hand circular
   f. Connector: N-Female (bottom feed)
2. Low Noise Amplifier Specifications:
a. Frequency Range: 1575.42 +/- 12 MHz
   b. Amplifier Gain: 40 dBi +/- 4 dB
   c. Impedance: 50 Ohm
   d. VSWR: =/< 2.0:1
   e. Maximum Noise Figure: <2.5 dB @ +25° C
   f. DC Voltage: 3.3-3.9 V (regulated)
   g. DC Current: ≤ 40 mA
   h. Filtering: 3 stage filtering including pre-selector
   i Bandwidth > 60 dB @ +/- 50 MHz off center frequency
   j. Connector Type: N-Female
2. Manufacturer/Model:
   a. PCTEL – GPS-TMG-40
   b. Prior-approved equal.

3. Mounting Accessories:
   a. Mounting Hardware
      1) Universal Mounting Kit, for 1"- 1.45" OD mast.
         a) Collar: PCTEL part number: GPS-TMG-MNT
         b) Pipe Clamp: PCTEL part number: GPS-TMG-LMNT
      2) Collar Mount, for 1"-1.45" OD mast.
         a) Collar Mount: PCTEL part number: GPS-TMG-MNT.
      3) Fabricated Heavy Duty Antenna Mounting Mast, consisting of:
         a) 1" Schedule 80 galvanized steel pipe as required.
4. GPS Timing Reference Antenna to be furnished and installed at the following site(s):
   a. Anchor Hill Communications Tower
      1) Antenna to be attached to accessory Universal Mounting Kit or Collar Mount.
      2) Antenna Mount to be in turn clamped to accessory Fabricated Heavy Duty Antenna Mounting Mast.
      3) Fabricated Heavy Duty Antenna Mounting Mast in turn to be appropriately, securely, and in keeping with generally accepted best practices, affixed to south leg of communications tower at a stand-off distance of ~12".

b. Water Treatment Plant
   1) Antenna to be attached to accessory Universal Mounting Kit or Collar Mount.
   2) Antenna Mount to be in turn clamped to accessory Fabricated Heavy Duty Antenna Mounting Mast.
   3) Antenna mounting mast in turn to be mounted to WTP lime silo railing using stainless or galvanized steel clamps (x2) such that antenna center-beam is at a height of ~61' AGL.

G. WiFi Base Station Omnidirectional Antenna (External)

1. Antenna Element Electrical Specifications:
   a. Frequency Range: 2.4-2.5 GHz
   b. Amplifier Gain: 2 dBi
   c. Impedance: 50 Ohm
   d. VSWR: =/< 1.5:1
   e. Polarization: Vertical linear
   f. Connector: N-Female (bottom feed)
   h. Radiation Pattern – Vertical Polarization:
      1) Horizontal: 360°
      2) Vertical: 50°
2. Manufacturer/Model:
   a. PCTEL – MHO2400NF
   b. Prior-approved equal.

3. Mounting Accessories:
   a. Mounting Hardware
      1) Fabricated Light Duty Antenna Mounting Bracket.
         a) Stainless or galvanized steel bracketing material as required.
      b) 3) Fabricated Heavy Duty Antenna Mounting Mast, consisting of 1"- 1 ¼" Schedule 80 galvanized steel pipe as required.

4. WiFi Base Station Omnidirectional Antenna to be furnished and installed at the following site(s):
   a. Anchor Hill Communications Tower (x3)
      1) Antenna to be attached to accessory Fabricated Light Duty Mounting Bracket.
      2) Antenna Mounting Bracket to be in turn to be appropriately, securely, and in keeping with generally accepted best practices, affixed to east leg of communications tower at a stand-off distance of ~24".
   b. Water Treatment Plant
      1) Antenna to be attached to accessory Fabricated Mounting Bracket.
      2) Antenna mounting mast in turn to be mounted to WTP lime silo railing using stainless or galvanized steel clamps (x2) such that antenna center-beam is at a height of ~61' AGL.

2.03 FEED-LINES, JUMPER CABLES, CONNECTORS, AND CABLING ACCESSORIES

A. 900 MHz, 1.575 GHz, 2.4 GHz, Radio System Coaxial Antenna Cables

1. Acceptable Cable Manufacturers:
   a. Andrew Corporation: LDF4-50 Heliax.
   b. Times Microwave Systems: LMR-600.
2. Provide low-loss foam-dielectric type cable connectivity between lightning protection devices and site antennas.
   a. Cable: ½" or larger diameter to adequately minimize 900 MHz cable signal losses and to provide the desired level of cable rigidity and wind tolerance required for long term optimal performance.
   b. Connectors: Straight Type-N Male:
      1) Andrew LDF4-50 cable:
         a) L4TNM-PSA Straight Type N-Male connector.
      2) Times Microwave Systems LMR-600 cable:
         a) EZ-600-NMH-X
         b) EX-600-NMC-2-D
3. Coaxial antenna cable connector installation to be performed by qualified personnel experienced in the installation of microwave frequency radio telemetry equipment using the appropriate cable manufacturer's specific methods, cable preparation & connector installation tool(s) applicable to the cable and connector(s) being installed.
4. Coaxial Antenna Cable Grounding
   a. All antenna coaxial transmission line systems to be grounded per NEC and cable manufacturer's specifications.
   b. All antenna coaxial transmission lines entering a building or shelter shall have the outer conductive shield grounded as close as practical to the point of building or shelter ingress.
   c. All antenna coaxial transmission lines not entering a building or shelter shall have the outer conductive shield grounded to either the control panel containing the radio equipment associated with that coaxial cable or to a common point ground to which the control panel has been adequately bonded.
   d. In addition to the above, in the case of those antenna systems to be mounted on the Water Treatment Plant Lime Silo, the coaxial cabling systems servicing these antennas shall also be grounded to a suitable electrical conductive contact point near the antenna.
   e. Only grounding kits manufactured by the cable manufacturer produced specifically for the cable being installed shall be used. Third party grounding kits will not be accepted.
      1) Andrew LDF4-50: Andrew SureGround Ground Kits. Acceptable Andrew part numbers:
         a) SGL4-06B1
         b) SGL4-06B2
         c) SGL4-06B3
         d) SGL4-06B4

2) Times Microwave Systems: Standard Ground Kit for LMR-600 Coaxial Cable. Acceptable Times Microwave System part number:
a) GK-S600TT

5. Coaxial Antenna Cable Weatherproofing.
a. All coaxial cable connection points potentially exposed to either significant moisture or to the elements of nature shall be weatherproofed per cable and connector manufacturer's instructions.
b. Weather Proofing Materials
1) Andrew: Connector/Splice Weatherproofing Kit, Andrew part number: 221213
2) Times Microwave Systems: Universal Weatherproofing Kit, Times Microwave part number: WK-U.

B. 900 and 2.4 GHz MHz Radio System Coaxial Jumper Cables

1. Acceptable Cable Manufacturers:
a. Andrew Corporation - FSJ1RK-50A 1/4"
1) Superflexible solid corrugated copper outer conductor.
2) Closed-cell foam-dielectric protection of inner conductor.
3) Fire retardant polyolefin outer protective jacket.
4) Length:
a) As required to accommodate control panel configuration/layout. Must connect the radio equipment antenna port to lightning protection device without strain or tension.
b) Standard Lengths:
i. 3 Feet – Part Number: F1RNB-PNTM-3
ii. 6 Feet – Part Number: F1RNB-PNTM-6
b. Coaxial Jumper Cable Accessories:
a. SMA-Male to TNC-Female Adapter Connector (for WiFi radio connection on 900 MHz Access Point radios)
1) Nickel plated body.
2) Gold plated center conductor.
3) Manufacturer:
a. L-com – Part number: BA580
b. Approved equivalent.

C. Ethernet Jumper Cables

1. EIA/TIA Category 6, 4-pair, 22 gauge.
2. FEP Teflon plenum rated.
3. Manufacturer:
a. Mohawk/COT
b. Approved equivalent.

2.04 SYSTEM LIGHTNING PROTECTION

A. General Specifications:
   1. Frequency of Operation: 700 MHz – 2.7 GHz.
   2. VSWR: ≤ 1.1:1
   3. Insertion Loss: < 0.1 dB.
   4. Maximum Power Rating: 500 Watt RMS @ 920 MHz.
   5. Maximum Peak Instantaneous Power: 27 kW.
   6. Maximum Throughput Energy: ≤ 5 nJ.
   7. Maximum Let Through Voltage: ≤ +/-3 V.

B. Manufacturer/Model:
   1. PolyPhaser TSX-NFF
   2. Prior approved equal.

C. Shall be furnished and installed at each radio site.

2.07 WIRELESS NETWORK EQUIPMENT

A. This section outlines the technical specifications of the industrial wireless data communications (“radio”) network required to support the intended functionality of the Gilt Edge Mine instrumentation, control, and video monitoring network. Accordingly, the supplied radio network equipment must meet the following specifications.

B. Radio Equipment Specifications

1. Radios supplied under this contract must meet FCC and IC rules for digital transmission system radio operation (FCC 15.247 DTS) in the 902–928 MHz Spread Spectrum frequency band.
2. The radio shall use the spread spectrum Frequency Hopping technique for data communications. Frequency hopping has the advantage of transmitting with a full one watt of power over each single frequency for maximum range.
3. The radio shall use Orthogonal Frequency Division Multiplexing (OFDM) encoding technology along with Forward Error Correction (FEC) and Automatic Retransmit reQuest (ARQ) to improve RF robustness.
4. The radio shall have Quality of Service features built in to the radio to facilitate data prioritization.
5. The radio shall provide optional USB ports, built-in Wi/Fi Access Point, and a built in GPS receiver to facilitate system interoperability.
6. All radios must be manufactured in an ISO 9001 approved facility and by an ISO 9001 certified manufacturer. A certificate of ISO 9001 registration must be included with the bid documents.
7. The radio must have FCC and Industry Canada certification under FCC rules Part 15.247 and IC RSS-210.
8. The radios must be industrial rated, with an MTBF of 25 years or better, following Telcordia method 1, case 3.
9. The radio solution must have built-in security mechanisms to prevent network access to unauthorized users.

C. Data Capabilities

1. The radios must be able to bridge all types Ethernet frames.
2. The radio data interface must be (2) on-board 10/100BaseT Ethernet ports. The serial ports must be RS-232 with DB9 connectors.
3. Communications between the central master site and all remote radios must operate under Media Access Control.
4. The radio solution must be able to provide a data throughput of up to 8.0 Mbps depending on receive signal strength, data file type and system load.
5. The system must allow communications between Remote radios in an indirect form through the Access Point.

D. Radio Transceiver Performance

1. The radios must provide high performance, long distance communications. The minimum system gain must be no less than 138 dB, for example:

TYPICAL SYSTEM GAIN CALCULATIONS (3.5 MHz Channel)		
Transmit Power	=	30 dB
Antenna gain	=	12 dB
Receive Sensitivity	=	-96 dB
Total System Gain	=	138 dB

2. The radios must be designed to minimize interference from noise and other radios operating in this band. Transmit power must be adjustable from 0.1 watt to the FCC maximum of 1.0 watt. The radio must be capable of hopping over multiple frequencies from 902 to 928 MHz. To insure the ability to operate multiple radio systems in one area and to avoid possible interference that may be in this band, the Access Point must use TDD Access Point synchronization using a built-in GPS component.
3. The radio must allow the user to select the hop pattern from a given list.
4. The radio solution must utilize internal components that automatically optimize communication performance and eliminate the requirements for internal tuning adjustments. A radio that requires internal adjustments will be considered non-compliant.
5. Software/Firmware configurable operating parameters must be available to insure maximum mobile data radio system performance and that throughput is available for a wide variety of system conditions and configurations.
6. It must be possible to match the hop dwell time (time transmitting on each frequency) to the type of user traffic in order to optimize data throughput. To accomplish this, a minimum of four user-configurable dwell time settings are required; for example: 5, 8, 10, and 20msec.
7. It must be possible to operate the system in a mode that buffers data or in a mode that transmits data as it is received by the radio.
8. The radio must be capable of operation on DC voltages from 10.5 to 30 VDC. An optional “packaged” system must be available that provides a NEMA 4

enclosure with power supplies for 48, 120 VDC or 120/240 VAC at 50 or 60 Hz. Battery back-up with charger must be available for radios with AC power supplies.

9. The radio must have a diode protection to prevent problems caused by inverted power lead connections.

E. Management Requirements

1. The radio system shall provide integral diagnostic capability to allow the user to verify communications reliability between the master and remote radios.
2. All system configuration parameters must be capable of being set by the user via a PC connected directly to the radio either through the Ethernet port or through a serial port. It will not be acceptable to require an external interface box to adapt a hand held terminal or PC to the mobile data radio, nor will it be acceptable to have any internal adjustments or switch settings of any type.
3. Radio performance statistics must be maintained by each radio. This information must include as a minimum, a) the total number of transmitted packets, b) the total number of received packets and c) the total number of packets with errors.
4. Basic diagnostic information must be available from each radio via external LED's including as a minimum: Power, link status, alarm state, Ethernet connection status, mobile data radio data activity, Ethernet data activity, serial data activity, and, optionally, GPS receive activity.
5. Remote management for each individual radio must be accessible via a standard Web browser interface such as Microsoft Internet Explorer, or via a Telnet session. It is preferred to have both methods available. The remote management shall be open-standards based allowing a network administrator to operate the management utilities on either Windows or Unix workstations as well as integrate to multiple Contractor platforms, such as HP OpenView.
6. The radio solution shall fully support network roaming and sub-network roaming and maintain full application persistence when performing network/sub-network handoffs or during periods of no coverage.
7. The solution must provide a virtual private network, to include client to server across both public and private networks.

F. Radio System Specifications

1. The radio system must meet the following specifications. If any specification is not met in its entirety, the supplier must clearly identify the specific area of non-conformance as an exception to the specification.
2. General
   a. Frequency Range: 902–928 MHz Spread Spectrum Band
   b. MTBF: >220,000 hrs. (Telcordia method 1, case 3)
3. Radio Interface (antenna port)
   a. Data Latency: 60 msec (as measured in closed loop)
   b. Modulation Type: OFDM Encoding Technology
   c. Connector Type: TNC
   d. Output Impedance: 50 Ohms

4. Transmitter
   a. Power Output: 0.1 to 1.0 watt (+20 to +30 dBm)
   b. Duty Cycle: Continuous
   c. Spurious Emissions: -67 dBc
   d. Transmitter Keying: Data activated
   e. Channel Bandwidth: 3.5 MHz or 1.75 MHz
5. Receiver
   a. Type: Double conversion superheterodyne
   b. Sensitivity: -96 dBm @ 3.5 MHz Ch < 1x10-6 BER
   c. Intermodulation: 59 dB minimum (EIA)
   d. Desensitization: 70 dB
   e. Spurious: 60 dB
   f. RSSI Range -20 dBm to -100 dBm

G. Data Interface (Ethernet)
1. User Interface: 10BaseT/100BaseT (x2)
2. Interface Connector: RJ-45

H. Data Interface (Serial)
1. User Interface: RS-232
2. Interface Connectors: DB-9
3. Byte Lengths: 10/11 bits
4. Data Transmission Rates: 1200, 2400, 4800, 9600, 19200, 38400, 57600, 115200 bps

I. PRIMARY POWER
1. Voltage: 10.5–30.0 VDC (13.8 VDC nominal)
2. Connector: Power/Interface connector
3. Reverse Polarity Protection: Diode across primary power input
4. AP Power Consumption: RX: 4.0 W
   TX: 25.0 W
   Ave (assuming 50% TX): 14.5 W
5. RM Power Consumption RX: 3.0 W
   TX: 25.0 W
   Ave (assuming 1% TX): 3.2 W

J. Environmental
1. Humidity: 95%@40°C (104°F) non-condensing
2. Temperature Range: –40° to + 70°C (–22° to 140°F) min
3. Size: 2.0" x 5.625" x 7.25" H/D/W max
4. Weight: 2.2 pounds (1.0 kg) max
5. Case: Die-cast aluminum preferred

K. Security
1. Encryption: 128-bit AES or better
2. HTTP encryption: MD5 Digest or equivalent
3. Early warning notification: SNMP traps on security related events

L. Agency Certifications (US)

1.	FCC:	Part 15
2.	FM (for Hazardous Locations)	Class 1, Division 2, Groups A, B, C and D

M. Non-Conformance

1. All alternative product based responses to this specification must include a line-by-line table of conformance that clearly identifies all areas of non-conformance as an exception to the specification.

N. Security And Network Monitoring

1. The mobile radio system must meet the following security specifications:
   a) Physical Security – Random frequency hopping initiated and controlled by the AP via the use of beacons makes it impossible for a radio to join the network unless it associates with the AP. Radios are also designed with user passwords that allow only users with the correct passwords to gain access to the configuration of the radio.
   b) MAC address filtering – Operating at the MAC layer, only devices with known Media Access Control (MAC) or physical addresses are allowed to associate with the AP and join the network.
   c) TCP/IP Filtering – Filtering done at the Transport layer by allowing only devices with a known IP Addresses to associate with the AP and join the network.
   d) AES Encryption – Adaptive Encryption Standard (AES) is a 128-bit block data encryption technique that works on multiple layers to ensure a high level of data encryption.
   e) TKIP Encryption – Temporal Key Integrity Protocol (TKIP) scrambles keys according to a hashing function and then implement integrity checks to validate the received keys.
   f) EAP and RADIUS – Extensible Authentication Protocol (EAP) defined in RFC 2284 is a user authentication protocol that enables an AP to verify the authenticity of a Remote attempting to join a WLAN. The AP will authenticate the Remote by querying a Remote Dial-In User Service (RADIUS) server that contains all relevant user authentication information.
   g) VLAN – Virtual LAN (VLAN) is software configurable technique to allow a network of computers to behave as if they are connected physically when they do not necessarily have to be.
   h) VPN – Virtual Private Network (VPN) is a private network formed over a public network such as the Internet. Using security and user authentication techniques only selected devices may connect with each other.

O. Network Monitoring Features

1. The radio system must support the following network monitoring features:
   a) Performance Management – Measures and makes available various aspects of network performance so that inter-network performance can be maintained at an acceptable level. Examples of performance variables that might be provided include, but are not limited to network throughput, user response times, and component utilization.
   b) Configuration Management – Monitor network and system configuration information so that the effect of configuration changes (intentional or non-intentional) can be tracked and managed.
   c) Fault Management – Detect, log, notify support organizations and users (where appropriate) of, and (to the extent possible) automatically fix network problems to keep the network running effectively. This should include proactive determination of symptoms, isolation of problems and rapid resolution
   d) Security Management – Control access to network and system resources according to defined policies so that the network cannot be sabotaged (intentionally or unintentionally) and those without appropriate authorization cannot access sensitive information.
   e) Support for event notifications
   f) Support for group management of system components
   g) Built-in configuration database
   h) Support for Simple Network Management Protocol ("SNMP") standards
   i) Graphical representation of network data
   j) Support for configurable Access Control Lists ("ACLs")
   k) Ability to drill-down on System components
   l) Ability to auto discover new devices in the System
   m) Support for wireless proxy agents for non-SNMP devices
   n) Support for statistical reporting
   o) Support for remote management and updates of remote system components from a central location.

P. Acceptable Radio Manufacturers:

1. GE MDS – Mercury 900
2. Cambium – PMP 100/900 MHz

Q. Radio network equipment to be furnished - preconfigured, pre-tested, and labeled – to the selected control system's integrator, or designated enclosure fabrication facility, for installation and assembly into the control system enclosures to be built for each of the following site(s):

1.	Office	*(to Anchor Hill Tower)*	Remote
2.	Anchor Hill Communications Tower		
	a)	*(to Office)*	Access Point
	b)	*(to Sunday Pit)*	Access Point
	c)	*(to Water Treatment Plant)*	Access Point
3.	Sunday Pit	*(to Anchor Hill Tower)*	Remote

4. Strawberry Pond *(to Anchor Hill Tower)* Remote
5. Anchor Hill Pit *(to Anchor Hill Tower)* Remote
6. Water Treatment Plant
   a) *(to Anchor Hill Tower)* Remote
   b) *(to Ruby Repository)* Access Point
7. Ruby Repository *(to Water Treatment Plant)* Remote
8. Hoodoo Gulch *(to Water Treatment Plant)* Remote

R. SPARES

1. The radio system supplier/contractor shall provide radio equipment spares as follows:
   a) Access Point Radio: (x1)
   b) Remote Radio: (x1)

S. RADIO NETWORK ACCESSORIES

1. Radio Network Repeater Enclosure

   a. Enclosure, 24x24x30
   b. Enclosure A/C unit – ISC or equivalent
   c. UPS – 24 hour battery autonomy
   d. DC Power Supply – 24 VDC, $\geq$ 60 Watt
   e. Managed Ethernet Switch, SIXNET SL or N-Tron
   f. GPS Antenna System (x3)
   g. Power Distribution and Wiring/Cable Management
      1) External
      2) Internal
   h. Grounding
      1) Bonded to tower
   i. Enclosure Mounting Hardware
      1) Tower member bracketing

2. Radio Network Repeater Enclosure to be furnished and installed at the following site(s):
   1) Anchor Hill Communications Tower

PART 3 EXECUTION

3.01 INSTALLATION
A. Shall be performed by the same pre-qualified Radio Equipment Supplier.

3.02 ANTENNA AND TRANSMISSION LINE TESTING & CERTIFICATION
A. Coaxial Antenna Cables/Antenna Feedlines
1. Upon installation, each antenna and transmission line system will be tested for radio frequency continuity via time domain reflectometry.
2. Upon installation, each antenna and transmission line system will be tested for frequency resonance within the 902-928 MHz band.
3. The professionally prepared and clearly labeled test results and pre-commissioning certifications for each antenna and transmission line

system to be provided to the Engineer/Owner in both hard copy and electronic format.

3.03 ON-SITE SYSTEM START-UP SERVICES

A. Radio Equipment Supplier shall plan and allow for two (2) days of wireless network equipment manufacturer/Authorized Full Service Partner on-site support upon completion of control panel installation.

B. Prior to control system start-up, Wireless Network Equipment Manufacturer/Full Service Partner shall ensure wireless network installation is complete & correct, that wireless network is performing to manufacturer's specifications and is ready for placement into service.

C. Wireless Network Equipment Manufacturer/Full Service Partner shall coordinate with Control System Supplier technical staff to ensure that provided wireless network equipment adjustable parameters are further configured for optimal control system communications and video link performance to include Quality of Service data prioritization of control system/SCADA data over video data stream traffic throughout the wireless network.

3.04 WORKMANSHIP

A. The workmanship and design of this industrial wireless data communications network shall conform to all national, state and local codes and ordinances that apply.

B. Complete documentation information for this industrial wireless data communications network shall be included.

C. Commensurate with the criticality and visibility of this system, a very high level of professional excellence in supplier/contractor communication, craftsmanship, workmanship, and project administration throughout shall be expected and appreciated.

END OF SECTION

Appendix A

Email from Krush, Brad [mailto:Brad.Krush@blackhillscorp.com] **regarding an estimate to provide electrical power to the Anchor Hill Pit Area Tower, as described in Part 2 – Products, 2.01 Communications Tower, Section B.1.b.**

Mark,

This is a quick estimate and drawing.

Estimate as drawn, $4,103.00.

Included in this estimate;

- 10 kva 120/240 transformer
- Transformer framing, cutout, arrester, hot line clamp, primary jumpers, secondary jumpers
- Ground rod, ground wire
- Secondary riser, u-guard, secondary connections at transformer
- 200 feet 1/0 underground triplex

You will be responsible for trenching to the disconnect.

You also have the option of an overhead service to your disconnect. This could be located on the tower. Your electrician would be responsible for the riser and the disconnect.

If the mapped drawing is acceptable, I will complete a formal estimate, and send you the paperwork.

Thanks.

Brad Krush
BHP Construction Rep.
Sturgis, SD
605-391-4579
605-206-2967

BROHM MINE

WR#: 554509 WORK ORDER #: 00000000 INITIALS: BJK

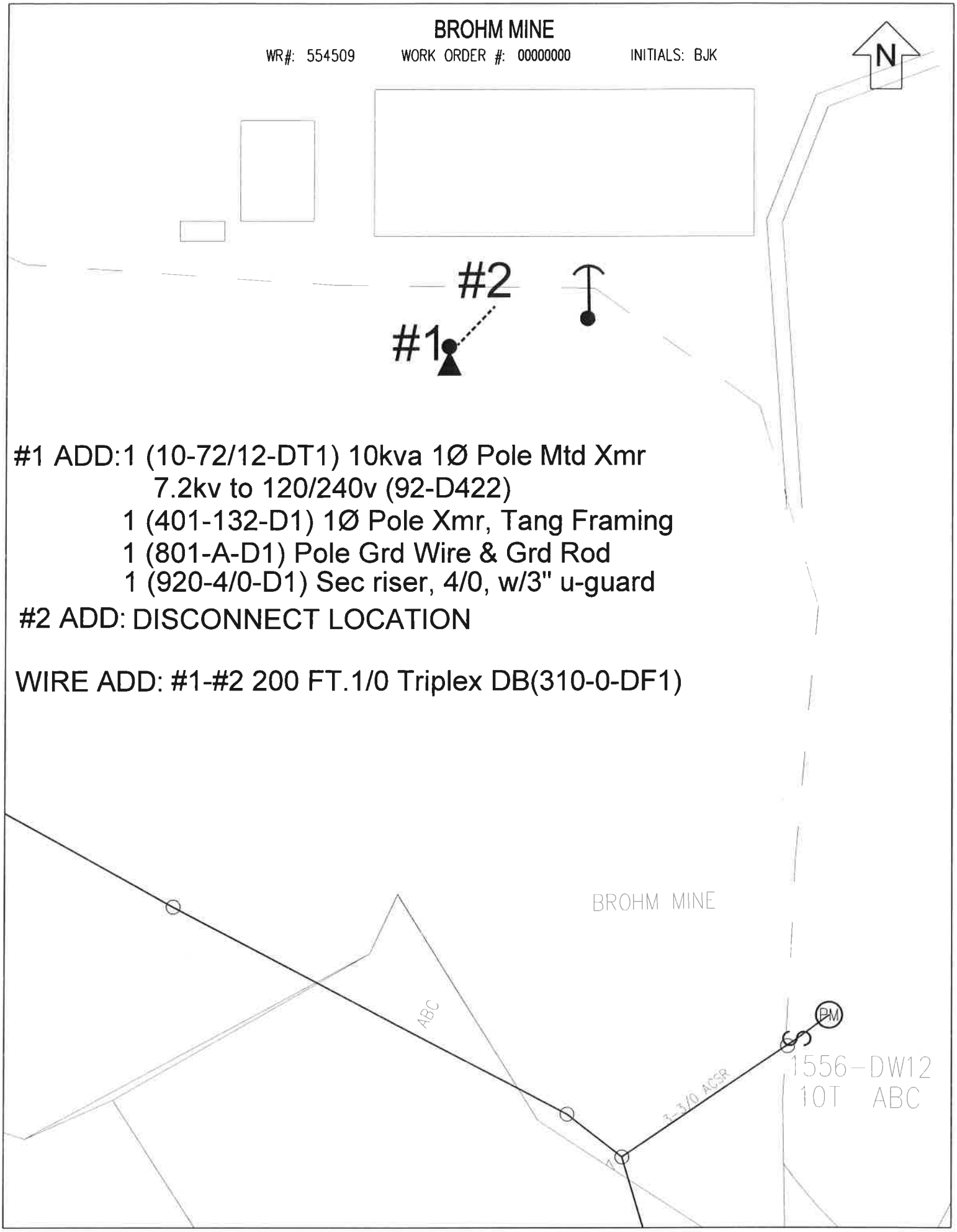

#1 ADD:1 (10-72/12-DT1) 10kva 1Ø Pole Mtd Xmr
7.2kv to 120/240v (92-D422)
1 (401-132-D1) 1Ø Pole Xmr, Tang Framing
1 (801-A-D1) Pole Grd Wire & Grd Rod
1 (920-4/0-D1) Sec riser, 4/0, w/3" u-guard

#2 ADD: DISCONNECT LOCATION

WIRE ADD: #1-#2 200 FT.1/0 Triplex DB(310-0-DF1)