HYPERION
ENERGY CENTER

Prevention of Significant Deterioration (PSD) Permit Application

December 2007

Submitted to:

South Dakota Department of Environment & Natural Resources
Joe Foss Building
523 E. Capitol
Pierre, SD 57501

Prepared for:

Hyperion Refining LLC

Prepared by:

RTP Environmental Associates, Inc.
304-A West Millbrook Rd.
Raleigh, NC 27609

TABLE OF CONTENTS

Chapter 1. Introduction and Project Description 1

1.1 Introduction 1
1.2 Hyperion Energy Center Project Site 2
1.3 Project Schedule 4
1.4 Project Emissions Summary 4

Chapter 2. Process and Equipment Description 5

2.1 Process Overview 5
2.1.1 Petroleum Refinery Overview 5
2.1.2 IGCC Power Plant Overview 7
2.2 Petroleum Refinery Process Units 8
2.2.1 Atmospheric Crude Distillation Units 8
2.2.2 Vacuum Distillation Units 9
2.2.3 Sulfur Removal and Gas Plant 9
2.2.4 Naphtha Hydrotreater Unit 10
2.2.5 Naphtha Reforming Units 10
2.2.6 C_5/C_6 Isomerization (Penex) Unit 11
2.2.7 Benzene Removal ("BenSat") Unit 11
2.2.8 Butane Conversion Complex 11
2.2.9 Distillate Hydrotreater Unit 12
2.2.10 Hydrocracker Units 12
2.2.11 Delayed Cokers 13
2.2.12 Sour Water Stripper Units 14
2.2.13 Amine Regeneration Units 14
2.2.14 Sulfur Recovery Plant 14
2.2.15 Refinery Flares 16
2.2.16 Wastewater Treatment Plant 16
2.2.17 Tank Farm 19
2.2.18 Loading Racks 20
2.2.19 Cooling Tower 20
2.2.20 Product Blending 20
2.3 IGCC Power Plant 21
2.3.1 Feedstock Receiving, Storage, and Preparation 21
2.3.2 Flux Receiving, Storage, and Handling 21
2.3.3 Air Separation Units 22
2.3.4 Gasification System 22
2.3.5 Shift Conversion Reactors 23
2.3.6 Syngas Cleanup 24
2.3.7 Slag Handling, Storage, and Loading 25
2.3.8 Pressure Swing Adsorption (PSA) Unit 25

2.3.9 Combined Cycle Gas Turbines 25
2.3.10 Sour Water Treatment.....26
2.3.11 CO_2 Compression 26
2.4 Emergency Equipment 26

Chapter 3. Analysis of Applicable Requirements. 28
3.1 Prevention of Significant Deterioration 28
3.1.1 Determination of Applicable Major New Source Review Regulation 28
3.1.2 Identification of Stationary Source.....28
3.1.3 Determination of Major Stationary Source Status and PSD Applicability 29
3.1.4 Summary of Applicable PSD Provisions 30
3.2 New Source Performance Standards 31
3.2.1 40 CFR Part 60, Subpart A 31
3.2.2 40 CFR Part 60, Subpart Da 31
3.2.3 40 CFR Part 60, Subpart Db 32
3.2.4 40 CFR Part 60, Subpart Dc 33
3.2.5 40 CFR Part 60, Subpart J.....33
3.2.6 40 CFR Part 60, Subpart Ja 33
3.2.7 40 CFR Part 60, Subpart Kb 35
3.2.8 40 CFR Part 60, Subpart Y 35
3.2.9 40 CFR Part 60, Subpart GG 36
3.2.10 40 CFR Part 60, Subpart UU 36
3.2.11 40 CFR Part 60, Subpart VV.....36
3.2.12 40 CFR Part 60, Subpart XX.....36
3.2.13 40 CFR Part 60, Subpart GGG 37
3.2.14 40 CFR Part 60, Subpart III.....37
3.2.15 40 CFR Part 60, Subpart NNN.....37
3.2.16 40 CFR Part 60, Subpart OOO 38
3.2.17 40 CFR Part 60, Subpart QQQ 38
3.2.18 40 CFR Part 60, Subpart RRR.....38
3.2.19 40 CFR Part 60, Subpart IIII.....39
3.2.20 40 CFR Part 60, Subpart KKKK.....39
3.3 National Emission Standards for Hazardous Air Pollutants 39
3.3.1 40 CFR Part 61, Subpart A 39
3.3.2 40 CFR Part 61, Subpart J.....40
3.3.3 40 CFR Part 61, Subpart Y 40
3.3.4 40 CFR Part 61, Subpart BB.....40
3.3.5 40 CFR Part 61, Subpart FF 40
3.3.6 40 CFR Part 63, Subpart A 41
3.3.7 40 CFR Part 63, Subpart B 41
3.3.8 40 CFR Part 63, Subpart F 42
3.3.9 40 CFR Part 63, Subpart G.....42
3.3.10 40 CFR Part 63, Subpart H 42
3.3.11 40 CFR Part 63, Subpart Q.....43
3.3.12 40 CFR Part 63, Subpart R 43

3.3.13 40 CFR Part 63, Subpart CC 43
3.3.14 40 CFR Part 63, Subpart UUU 45
3.3.15 40 CFR Part 63, Subpart EEEE 45
3.3.16 40 CFR Part 63, Subpart FFFF 46
3.3.17 40 CFR Part 63, Subpart YYYY 46
3.3.18 40 CFR Part 63, Subpart ZZZZ 46
3.3.19 40 CFR Part 63, Subpart DDDDD 46
3.4 South Dakota Administrative Rules 47
3.4.1 ARSD § 74:36:05 47
3.4.2 ARSD § 74:36:07 47
3.4.3 ARSD § 74:36:08 47
3.4.4 ARSD § 74:36:09 47
3.4.5 ARSD § 74:36:19 47

Chapter 4. Best Available Control Technology (BACT)..... 48
4.1 BACT Analysis Overview 48
4.1.1 Best Available Control Technology Definition 48
4.1.2 Methodology for BACT Analyses 48
4.1.3 BACT Baseline 49
4.1.4 BACT Technical Feasibility Criteria 49
4.2 Petroleum Refinery Process Heaters 50
4.2.1 Nitrogen Oxides Emissions 50
4.2.2 Sulfur Dioxide and Sulfuric Acid Mist Emissions 54
4.2.3 Carbon Monoxide Emissions 56
4.2.4 Volatile Organic Compounds Emissions 58
4.2.5 Particulate Matter Emissions 59
4.3 Petroleum Refinery Fuel Gas Producing Units 59
4.3.1 VOC and H_2S Emissions 60
4.3.2 SO_2, CO, NO_X, and Particulate Matter Emissions 62
4.4 Catalyst Regeneration Vents 63
4.4.1 Nitrogen Oxides Emissions 63
4.4.2 Sulfur Dioxide Emissions 64
4.4.3 Carbon Monoxide Emissions 65
4.4.4 Particulate Matter Emissions 65
4.5 Cooling Tower 66
4.5.1 Particulate Matter Emissions 66
4.5.2 Volatile Organic Compounds 68
4.6 Sulfur Recovery Plant 69
4.6.1 Sulfur Dioxide and Sulfuric Acid Mist Emissions 70
4.6.2 Hydrogen Sulfide Emissions 73
4.6.3 NO_X Emissions 73
4.6.4 Particulate Matter Emissions 74
4.6.5 CO and VOC Emissions 75
4.7 Storage Tanks 76
4.7.1 Volatile Organic Compounds Emissions 76

4.7.2 Particulate Matter Emissions 80
4.7.3 Hydrogen Sulfide Emissions 81
4.8 Product Loading Racks 82
4.8.1 Volatile Organic Compounds Emissions 82
4.8.2 Fugitive Particulate Matter Emissions 83
4.9 Wastewater Treatment Plant 84
4.9.1 Volatile Organic Compounds Emissions 84
4.9.2 Nitrogen Oxides Emissions 86
4.10 Equipment Leaks 87
4.10.1 Volatile Organic Compounds Emissions 87
4.10.2 Hydrogen Sulfide 90
4.11 Materials Handling 90
4.11.1 Non-Fugitive Particulate Matter Emissions 91
4.11.2 Fugitive Particulate Matter Emissions 92
4.12 Gasifier Startup Burners 93
4.12.1 NO_X, CO, and VOC Emissions 94
4.12.2 Sulfur Dioxide, Sulfuric Acid Mist, and Particulate Matter Emissions 95
4.13 Gasification Flare 95
4.13.1 CO, VOC, and H_2S Emissions 96
4.13.2 SO_2 Emissions 97
4.13.3 NO_X, PM, and PM-10 Emissions 98
4.14 Carbon Dioxide Vent 100
4.14.1 CO Emissions 100
4.14.2 H_2S Emissions 100
4.15 Combined Cycle Gas Turbines: Maximum Coke Design Case 101
4.15.1 Nitrogen Oxides Emissions 101
4.15.2 Sulfur Dioxide and Sulfuric Acid Mist Emissions 105
4.15.3 Carbon Monoxide Emissions 107
4.15.4 Volatile Organic Compounds Emissions 109
4.15.5 Particulate Matter Emissions 110
4.16 Combined Cycle Gas Turbines: Natural Gas Design Case 112
4.16.1 Nitrogen Oxides Emissions 112
4.16.2 Sulfur Dioxide and Sulfuric Acid Mist Emissions 114
4.16.3 Carbon Monoxide Emissions 116
4.16.4 Volatile Organic Compounds Emissions 117
4.16.5 Particulate Matter Emissions 117
4.17 Diesel Engines 119
4.17.1 Sulfur Dioxide Emissions 119
4.17.2 Nitrogen Oxides and Volatile Organic Compounds Emissions 120
4.17.3 Carbon Monoxide Emissions 122
4.17.4 Particulate Matter Emissions 123

Chapter 5. Summary of Project Emissions 124
5.1 Petroleum Refinery 124
5.1.1 Process Heaters 124

5.1.2 Refinery Flares 126
5.1.3 Catalyst Regeneration Vents 126
5.1.4 Cooling Tower 127
5.1.5 Sulfur Recovery Plant 127
5.1.6 Storage Tanks 128
5.1.7 Product Loading Racks 128
5.1.8 Wastewater Treatment Plant 129
5.1.9 Petroleum Coke Handling 129
5.1.10 Equipment Leaks 130
5.2 IGCC Power Plant 131
5.2.1 Materials Handling and Storage 131
5.2.2 Gasification 131
5.2.3 Combined Cycle Gas Turbines 135
5.3 Diesel Engines 135

Chapter 6. Analysis of Impacts Due to Growth 137
6.1 Overview 137
6.2 Growth in Population 138
6.3 Growth in Air Pollutant Emissions 139
6.3.1 Stationary Source Emissions 140
6.3.2 Tailpipe Emissions 140
6.3.3 Other Area Source Emissions 141
6.3.4 Total Emissions Growth 142
6.4 Air Quality Impacts 142

Chapter 7. Class I Area Impacts Analysis 144
7.1 Distance to Class I Areas 144

Chapter 8. Case-by-Case Maximum Achievable Control Technology ("MACT") 145
8.1 Case-by-Case MACT Overview 145
8.1.1 Definition of MACT 145
8.1.2 Information Required for Case-by-Case MACT Determinations 146
8.1.3 Consideration of Subpart DDDDD Requirements 147
8.1.4 Methodology for Case-by-Case MACT Analyses 147
8.2 Organic HAP Emissions 148
8.2.1 Steps 1-4: Identify and Review Available Control Technologies 148
8.2.2 Step 5: Establish MACT Emission Limits 148
8.3 Hydrogen Chloride Emissions 149
8.3.1 Steps 1-3: Identify and Rank Available Control Technologies 149
8.3.2 Step 4: Evaluate Impacts of "Beyond-the-Floor" Control Options 150
8.3.3 Step 5: Establish MACT Emission Limits 150
8.4 HAP Metals Emissions 150

APPENDICES

Appendix A	Completed Permit Application Forms
Appendix B	Process Flow Diagrams
Appendix C	Emissions Calculations
Appendix D	Economic Impact Data for BACT Analyses
Appendix E	Air Dispersion Modeling and Class II Visibility Analysis Report
Appendix F	Soils and Vegetation Impacts Analysis
Appendix G	Growth Analysis
Appendix H	Carbon Dioxide Summary

Chapter 1. Introduction and Project Description

1.1 Introduction

Hyperion Refining LLC ("Hyperion") has proposed to construct the Hyperion Energy Center, a state-of-the-art center for excellence in the production of clean transportation fuels. The Hyperion Energy Center (the "HEC") will comprise a greenfield petroleum refinery and an integrated gasification combined cycle ("IGCC") power plant. The proposed HEC refinery and power plant will rank among the cleanest, most environmentally-friendly in the world. The planned refinery is a 400,000 barrel per day, highly-complex, full-conversion refinery that will produce clean transportation fuels such as ultra-low sulfur gasoline and ultra-low sulfur diesel.

The HEC will help America in three important ways:

- It will help enhance America's petroleum independence by processing North American crude oil in North America. The U.S. currently does not have sufficient refining capacity to process the heavy Canadian crude oils that will come on the market in the next decade. The HEC will provide a cutting-edge refinery to accommodate this increased volume of Canadian heavy crude.

- It will enhance our nation's petroleum refining capacity, and therefore reduce reliance on imports of foreign refined products and increase the security of the nation's supply of transportation fuels. Despite growing demand for oil and petroleum products, the last refinery built in the U.S. was completed in 1976. Existing facilities have been unable to keep up with demand and imports of refined products have increased dramatically. An inland location will also help reduce risks from tropical storms that regularly threaten a significant percentage of U.S. refining infrastructure.

- It will raise the standard for the entire petroleum industry by demonstrating that environmental principles and petroleum refining are not mutually exclusive. The HEC will provide a model for the design of new and upgraded refineries. It will incorporate best-in-class design principles and stringent environmental guidelines to protect our air, water, wetlands, and landscapes.

The capital investment associated with the proposed HEC refinery and IGCC power plant has been estimated to be in the range of $10 billion (in 2006 dollars). The facility will have a significant economic impact and will employ a substantial workforce, with a projected average

of 4,500 workers over a 48-month construction phase and 1,800 permanent jobs for the ongoing operation of the facility.

Hyperion is submitting this preconstruction air quality permit application and request for construction approval for the HEC as required by the Prevention of Significant Deterioration (PSD) program and other statutes and regulations as follows:

- South Dakota Codified Laws (SDCL) § 34A-1-21;
- Administrative Rules of South Dakota (ARSD) §§ 74:36:05 and 74:36:09;
- Federal PSD requirements, 42 U.S.C. § 7475 and 40 CFR § 52.21;
- National Emission Standards for Hazardous Air Pollutants, 40 CFR §§ 61.05 and 61.07; and
- National Emission Standards for Hazardous Air Pollutants for Source Categories, 40 CFR §§ 63.5 and 63.43.

The HEC will be located in Union County, South Dakota.[1] The site is in an area that is designated as attainment or unclassified for all criteria pollutants under the Clean Air Act. The facility will be a major stationary source and its construction will be subject to PSD review. Therefore, a PSD permit application is required for all pollutants emitted in significant quantities. These are the following:

1. Carbon Monoxide (CO)
2. Nitrogen Oxides (NO_x)
3. Particulate Matter (PM)
4. Particulate Matter less than 10 microns (PM-10)
5. Particulate Matter less than 2.5 microns (PM-2.5)
6. Sulfur Dioxide (SO_2)
7. Volatile Organic Compounds (VOC)
8. Hydrogen Sulfide (H_2S)
9. Sulfuric Acid Mist

1.2 Hyperion Energy Center Project Site

The Hyperion Energy Center will be located in Union County, north-northwest of the Town of Elk Point, South Dakota, and south of the Town of Spink, South Dakota, in the Siouxland region of southeastern South Dakota. The proposed site covers approximately 3,800 acres, of which approximately 2,000 acres will be an industrial zone and will include all pollutant-emitting activities. A regional map showing the project site is presented in Figure 1.2-1. More detailed information regarding the project site is presented in Appendix C to this permit application.

[1] Hyperion is currently considering other sites in the midwestern United States for the HEC, and may in the future propose to construct the HEC at an alternative site.

Figure 1.2-1. General Location of the Hyperion Energy Center

The proposed site is under primarily tilled agricultural land use, with significant topographic relief limited primarily to the northeast portion of the Project Area. Other important features in the area include the Missouri River to the south and Brule Creek to the northeast.

1.3 Project Schedule

Construction activities are planned to start in 2009 and to continue for approximately 48 months. Operation is planned to commence in 2013.

1.4 Project Emissions Summary

Table 1.4-1 presents a summary of the proposed facility's potential to emit both regulated and unregulated air pollutants.

TABLE 1.4-1. Summary of HEC Air Pollutant Emissions

Pollutant	Petroleum Refinery (tpy)	IGCC Power Plant (tpy)	Diesel Engines (tpy)	Total (tpy)
Carbon Monoxide	1,659	338	2	1,999
Nitrogen Oxides	424	346	3	773
PM	107	214	0	321
PM-10	349	697	0	1,046
PM-2.5	349	697	0	1,046
Sulfur Dioxide	676	187	0	863
VOC	406	67	0	473
Hydrogen Sulfide	6	19	0	25
Sulfuric Acid Mist	63	16	0	80
Hydrogen Chloride	49	0	0	49
Organic HAP	185	27	0	212
Ammonia	77	197	0	273

Chapter 2. Process and Equipment Description

2.1 Process Overview

The proposed Hyperion Energy Center will include a petroleum refinery, an integrated gasification combined cycle ("IGCC") power plant, and ancillary equipment. A simplified process schematic for the entire facility is shown in Figure 2-1. Process schematics for each process unit at the HEC are provided in Appendix B to this permit application.

2.1.1 Petroleum Refinery Overview

The planned refinery is highly-complex, full-conversion refinery that will produce clean transportation fuels such as ultra-low sulfur gasoline and ultra-low sulfur diesel. The refinery is nominally designed to receive and process 400,000 barrels per day ("BPD") of crude oil and 26,000 BPD of butane. [2] Other inputs will include natural gas and purchased gasoline blending components such as ethanol. The primary finished products of the refinery are ultra-low sulfur gasoline, with a nominal design capacity of 255,000 BPD; ultra-low sulfur diesel fuel, with a nominal design capacity of 169,000 BPD; jet fuel, with a nominal design capacity of 40,000 BPD; and liquefied petroleum gas ("LPG"), with a nominal design capacity of 21,000 BPD.[3] Other products will include sulfur and petroleum coke. The refinery will operate continuously, 365 days per year.

A petroleum refinery uses three major processes to transform crude oil into petroleum products: distillation, conversion, and purification. These processes are discussed generally in Sections 2.1.1.1 through 2.1.1.3. More detailed process descriptions for each of the refinery's process units are provided in Sections 2.2.1 through 2.2.20.

[2] Throughout this permit application, unit capacities presented are nominal, design basis values. Typical refinery and power plant practice involves temporary operation of process units well beyond the nominal design basis rate, without exceeding the operating capability of the equipment. To the extent that maximum hourly and annual emissions described in this application are based on nominal design capacities, allowances have been added to heat input rates and other process conditions to reflect this flexibility.

[3] The total nominal design capacity for finished products is approximately 415,000 BPD. The sum of the nominal design capacities for individual products exceeds this sum due to the product selection flexibility that is an important element of the refinery design.

Figure 2-1
Hyperion Energy Center Refining Process

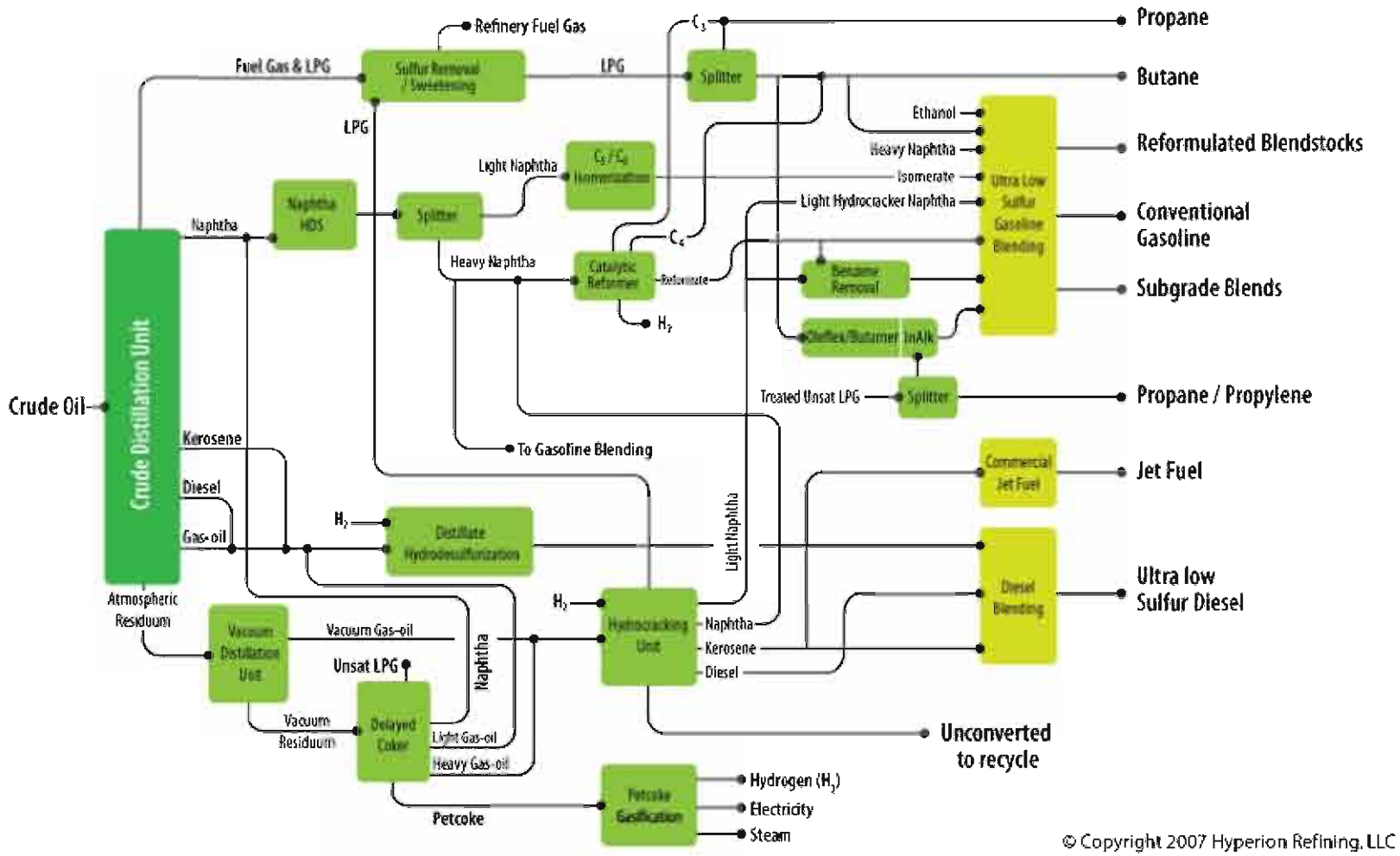

© Copyright 2007 Hyperion Refining, LLC

2.1.1.1 Distillation

The first step in the refining process is to separate the different hydrocarbon chains that comprise crude oil. Because hydrocarbons vaporize at different temperatures, crude oil is heated to over 700 degrees Fahrenheit (°F) and then is sent to a distillation tower. The temperature decreases gradually as the vapors rise through the tower and the components of the crude oil condense at different heights. Distillation separates the crude oil into unfinished products, most of which must be converted into the products that are demanded by today's consumers. Separate process units are used for atmospheric distillation, which occurs at approximately atmospheric pressure, and vacuum distillation, which occurs at a pressure less than atmospheric.

2.1.1.2 Conversion

A modern, complex, full conversion refinery such as that at the HEC will take the heavy unfinished products from the crude distillation units and turn them into more valuable lighter products such as gasoline and diesel fuel. This is the function of the hydrocracking unit and delayed coker which essentially reduce the length of long hydrocarbon chains.

2.1.1.3 Purification

Once crude oil has gone through the distillation unit and conversion units, natural impurities must still be removed from the petroleum products. Impurities are removed so that when these fuels are consumed they will burn more cleanly. Sulfur is a constituent in most crude oil and it must be removed to produce clean fuels such as ultra-low sulfur gasoline and ultra-low sulfur diesel. This is accomplished by hydrotreating.

2.1.2 IGCC Power Plant Overview

The planned IGCC power plant will include a gasification block and a power/steam block. The plant will use petroleum coke produced by the refinery, as well as additional feedstocks, to provide the refinery with hydrogen, at a nominal rate of approximately 450 million standard cubic feet per day; electric power, at a nominal rate of 200 megawatts ("MW"); and process steam, at a nominal rate of 2.4 million pounds per hour.

The refinery will produce petroleum coke at a nominal rate of 7,400 tons per day. This rate is not adequate to supply the refinery's needs for hydrogen, electric power, and steam, so additional fuel/feedstock must be imported to the power plant in order to make up the energy shortfall. Hyperion is currently considering two separate and mutually exclusive solutions to this problem, and these solutions would involve slightly different configurations for the power plant. The first configuration, termed the "maximum coke design case," will use imported solid fuels (*i.e.*, coke and/or coal) to meet the incremental energy needs. The second configuration, termed the "natural gas design case," will use imported natural gas to meet the incremental energy needs. Hyperion will not make a final decision regarding the IGCC power plant configuration until after receipt of the preconstruction air quality permit. Therefore, this permit application covers both the maximum coke design case and the natural gas design case, with worst-case emissions estimates used for all impacts analyses and with control technology assessments provided for all emissions units under each configuration.

The gasification block and steam/power block are discussed generally in Sections 2.1.2.1 and 2.1.2.2. More detailed process descriptions for each of the unit operations are provided in Sections 2.3.1 through 2.3.11.

2.1.2.1 Gasification Block

The heart of the gasification block is the gasification process, which gasifies solid fuel such as petroleum coke to produce a synthetic gas, or "syngas." Other significant unit operations within the gasification block include an air separation process, which provides oxygen for the gasification process; a shift conversion reactor, for converting carbon monoxide and steam in syngas into carbon dioxide (CO_2) and hydrogen; an acid gas removal process; a water treatment process; and a pressure swing adsorption ("PSA") process to produce pure hydrogen for use in the refinery.

Petroleum coke produced by the refinery will be the primary feedstock to the gasification block. Under the maximum coke design case, additional feedstocks to the gasification block will include imported petroleum coke and coal. In addition, under the maximum coke design case, the gasification block will be larger, including eight gasifiers, as compared to seven gasifiers in the natural gas design case.

2.1.2.2 Power/Steam Block

The power/steam block at the IGCC power plant will utilize five combined cycle gas turbines, each with fired heat recovery steam generators, to cogenerate electric power and steam for use in the refinery.

Under the maximum coke design case, the combustion turbines will be fired with syngas from the gasification block, and the heat recovery steam generators will be fired with both syngas and tailgas from the PSA process ("PSA tailgas"). The nominal gross electrical power output of the power/steam block under this configuration will be 532 MW. This reflects operation with four units running and one unit idle.

Under the natural gas design case, the combustion turbines will be fired with natural gas and the heat recovery steam generators will be fired with both natural gas and PSA tailgas. The nominal gross electrical power output of the power/steam block under this configuration will be 453 MW. This reflects operation with four units running and one unit idle.

2.2 Petroleum Refinery Process Units

2.2.1 Atmospheric Crude Distillation Units

The function of the Atmospheric Crude Distillation Units is to provide primary separation of the crude oil feedstock for subsequent processing by downstream units. Crude oil is pumped from tankage to the unit battery limits and preheated by exchange with hot products. The feed train continues through a desalter to remove entrained salts, and the desalted feed is then routed to a gas-fired charge heater.

The heated feed is sent to the atmospheric distillation column to separate the crude oil into various hydrocarbon fractions: refinery fuel gas, liquefied petroleum products (LPG), naphtha, kerosene, diesel, atmospheric gas oil, and atmospheric residuum. Light hydrocarbons (methane, ethane, and propane), gases (hydrogen, hydrogen sulfide, etc.), and naphtha leave the top of the atmospheric distillation column and go to an overhead condenser/separator. The light gases and hydrocarbons leave the top of the overhead separator and go to the fuel gas treating system for sulfur removal before being used as RFG in the refinery process heaters. The condensed hydrocarbons go to the naphtha stabilizer to further remove light hydrocarbons, such as LPG, from the naphtha before further processing in the refinery. Stripping steam condensed in the overhead separator is sent to the sour water collection system. The various straight run hydrocarbon draws (kerosene, diesel, and atmospheric gas oil) from the side of the atmospheric distillation column go to side strippers and further processing in the refinery. Atmospheric residuum is withdrawn from the bottom of the distillation column, and is sent to the Vacuum Distillation Unit.

Emissions from the Atmospheric Crude Distillation Units include combustion products from the gas-fired charge heaters and fugitive VOC emissions from valves, flanges, and seals on rotating equipment.

2.2.2 Vacuum Distillation Units

The function of the Vacuum Distillation Unit is to separate atmospheric residuum and similar feed materials into vacuum gas oil for feed to the hydrocracker units and vacuum residuum for feed to the delayed cokers. The feed material is partially vaporized in a gas-fired charge heater before being distilled under vacuum conditions. Light and heavy vacuum gas oils are produced as liquid products. Vacuum residuum is the remaining liquid fraction that is withdrawn from the bottom of the column. Stripping and vacuum ejector steam are condensed in the column overhead system and sent to the sour water collection system.

Emissions from the Vacuum Distillation Units include combustion products from the gas-fired charge heaters and fugitive VOC emissions from valves, flanges, and seals on rotating equipment.

2.2.3 Sulfur Removal and Gas Plant

Light hydrocarbons (hydrogen, methane, ethane, LPG) from crude distillation and produced as by-products from several refinery process units are treated to removal sulfur compounds and separated into refinery fuel gas, propane, and butane. Sulfur is removed from the light hydrocarbons by contact with an amine solution to remove H_2S. The LPG hydrocarbons are further treated for mercaptan removal (sweetening). The desulfurized LPG is separated into propane and butane by two distillation columns operating in series: the De-ethanizer and Depropanizer.

The H_2S-rich amine is sent to the Amine Regeneration Unit for regeneration and returned to the gas plant as lean amine (amine without H_2S). Other sulfur, including sulfur in the form of mercaptans, leaves the refinery as a solute in the spent caustic from the sweetening process.

There are no fired heaters in the Gas Plant. The only emissions are fugitive VOC emissions from valves, flanges, and seals on rotating equipment.

2.2.4 Naphtha Hydrotreater Unit

The Naphtha Hydrotreater pre-treats naphtha streams prior to processing in the Naphtha Reforming Units and the Penex Isomerization Unit. The Naphtha Hydrotreater removes contaminants such as sulfur and nitrogen using fixed bed catalytic reactors.

The mixed liquid naphtha streams fed to the Naphtha Hydrotreater are mixed with recycle and make-up hydrogen, heated in a gas-fired charge heater, and passed over the catalyst beds. The hydrogen reacts with the sulfur and nitrogen contaminants to produce H_2S and ammonia. Some of this H_2S and ammonia is absorbed in a water wash section, and the resulting sour water product is sent to the sour water collection system. Light ends from the hydrotreater reactors are separated from the liquid naphtha in a stripper column that is heated with a gas-fired reboiler. Liquid naphtha products from the reactor section are sent to a splitter section where light and heavy naphtha are separated in a fractionation column that is heated with a gas-fired reboiler.

Emissions from the Naphtha Hydrotreater Unit include combustion products from the gas-fired charge heater and the two gas-fired reboilers as well as fugitive VOC emissions from valves, flanges, and seals on rotating equipment.

2.2.5 Naphtha Reforming Units

The HEC refinery will include two Naphtha Reforming Units, also known as Continuous Catalytic Reforming ("CCR") or, because of the platinum-based catalyst used in the process, "Platforming" units. Platforming units increase the octane number of the heavy naphtha stream to make it more suitable for the production of motor gasoline. The octane number is a key measure of motor gasoline performance. The Platforming process chemically rearranges the hydrocarbon molecules to produce higher-octane materials. Hydrogen gas is produced as a by-product of reforming, and is used as feed to hydrogen-consuming units in the refinery.

The heavy naphtha streams used as feed to the Platforming units are mixed with recycle hydrogen and routed through a series of moving-bed, catalytic reactors. Heat for the reaction is provided by a gas-fired charge heater and three gas-fired interheaters. The charge heater and the first interheater share a convection section, and the second and third interheaters share a convection section, so each of these pairs of heaters is considered a single process heater and a single emissions unit for air permitting and regulatory purposes.

The reformed naphtha product ("reformate") is separated from the by-product hydrogen in a separator column. A portion of the hydrogen is compressed and recycled to be mixed with naphtha feed material. The remaining hydrogen (termed net gas) is compressed for use elsewhere in the refinery. Product reformate is separated from light ends in a stabilizer column, which is heated with a gas-fired reboiler.

The platformer reactor catalyst is continuously regenerated in the CCR Regenerator. Catalyst regeneration uses nitrogen, air and small quantities of perchloroethylene (as a source of chlorine) as regenerating agents. The CCR Regenerator is integrated with the reactors and performs two

principal functions – solid catalyst regeneration and circulation. Spent catalyst from the final Platforming reactor vessel is conveyed to the catalyst regeneration vessel. Exiting the regeneration vessel, the regenerated catalyst is conveyed back into the first platforming reactor. In this manner, freshly-regenerated catalyst is continuously circulated through the Platforming reactors.

Emissions from the Platforming Units include combustion products from the gas-fired process heaters; combustion products from the CCR Regenerators; and fugitive VOC emissions from valves, flanges, and seals on rotating equipment.

2.2.6 C_5/C_6 Isomerization (Penex) Unit

The Penex Unit increases the octane number of light naphtha using a catalytic isomerization process which converts C_5/C_6 paraffins into C_5/C_6 isomerates. Heated light naphtha is mixed with hydrogen gas and a small amount of chloride reagent, and passed through a series of fixed bed catalytic reactors. The primary liquid product, called "isomerate," is separated from fuel gas in a stabilizer column. The fuel gas from the stabilizer column is scrubbed with caustic to remove chlorides.

There are no fired heaters in the Penex Unit. The only emissions are fugitive VOC emissions from valves, flanges, and seals on rotating equipment.

2.2.7 Benzene Removal ("BenSat") Unit

The BenSat Unit treats light naphtha streams to produce an essentially benzene-free gasoline blending component. The feed material and make-up hydrogen are charged to a Saturation Reactor, where benzene is selectively saturated to C6 naphthenes. Downstream of the Saturation Reactor is a Stabilizer column that separates the liquid hydrocarbon stream from light ends.

There are no fired heaters in the BenSat Unit. The only emissions are fugitive VOC emissions from valves, flanges, and seals on rotating equipment.

2.2.8 Butane Conversion Complex

The Butane Conversion Complex uses several unit operations to produce a high-octane, paraffinic gasoline blending component, similar to traditional alkylate (isooctane or trimethylpentane), from mixed C_4 feed streams (butane and isobutane). The feed material is fed to a deisobutanizer distillation column for separation into butane and isobutane. A side stream from the deisobutanizer column, primarily n-butane, is routed to the Butamer Unit. The overhead stream from the deisobutanizer column, which is enriched in isobutane, is routed to the Oleflex Unit.

The Butamer Unit uses a fixed-bed, catalytic isomerization reactor to produce isobutane. Downstream of the reactor, a stabilizer column is used to separate isobutane product from light ends. Isobutane product is returned to the deisobutanizer column.

In the Oleflex Unit, the isobutane-enriched overhead stream from the deisobutanizer column is mixed with recycle hydrogen and routed through a series of catalytic dehydrogenation reactors. Heat for the dehydrogenation reaction is provided by a gas-fired charge heater and two gas-fired interheaters. These three heaters share a convection section and are considered a single process heater and a single emissions unit for air permitting and regulatory purposes. Downstream of the dehydrogenation reactor, the liquid product stream is separated from residual hydrogen, a portion of which forms the recycle stream.

The dehydrogenation reactor catalyst is continuously regenerated in the Oleflex catalyst regenerator. Catalyst regeneration uses nitrogen, air and small quantities of perchloroethylene (as a source of chlorine) as regenerating agents. The Oleflex catalyst regenerator is integrated with the reactors and performs two principal functions – solid catalyst regeneration and circulation. Spent catalyst from the final dehydrogenation reactor vessel is conveyed to the catalyst regeneration vessel. Exiting the regeneration vessel, the regenerated catalyst is conveyed back into the first dehydrogenation reactor. In this manner, freshly-regenerated catalyst is continuously circulated through the dehydrogenation reactors.

The liquid product from the Oleflex Unit is then routed to an InAlk Unit where it is heated, compressed, and fed to a catalytic condensation (*i.e.*, polymerization) reactor. The polymerized Oleflex product stream is combined with hydrogen and passed over another catalytic reactor to produce an iso-octane rich, paraffinic gasoline blending component. A stripper column is used to separate the liquid product from unreacted light ends, which are recycled to the Gas Plant.

Emissions from the Butane Conversion Complex include combustion products from the gas-fired process heaters; combustion products from the Oleflex catalyst regenerator; and fugitive VOC emissions from valves, flanges, and seals on rotating equipment.

2.2.9 Distillate Hydrotreater Unit

The Distillate Hydrotreater treats distillate streams such as kerosene and diesel to remove contaminants such as sulfur and nitrogen using fixed bed catalytic reactors.

The mixed distillate streams fed to the Distillate Hydrotreater are mixed with recycle and make-up hydrogen, heated in a gas-fired charge heater, and passed over the catalyst beds. The hydrogen reacts with the sulfur and nitrogen contaminants to produce H_2S and ammonia. Some of this H_2S and ammonia is absorbed in a water wash section, and the resulting sour water product is sent to the sour water collection system. Light ends from the hydrotreater reactors are separated from the hydrotreated distillate in a stripper column.

Emissions from the Distillate Hydrotreater Unit include combustion products from the gas-fired charge heater and fugitive VOC emissions from valves, flanges, and seals on rotating equipment.

2.2.10 Hydrocracker Units

The Hydrocracker Units hydrotreat and hydrocrack gas oil feedstock to produce light and heavy naphtha, kerosene, and diesel streams. The liquid feeds are mixed with recycled and make-up hydrogen, heated, and routed through a series of fixed-bed catalytic reactors where hydrotreating and hydrocracking reactions occur under conditions of high pressure and high temperature. In

the hydrotreating reactions, hydrogen combines with sulfur and nitrogen to produce H_2S and ammonia, which can be then be removed. In the hydrocracking reactions the heavy hydrocarbon feed is cracked into saturated and unsaturated hydrocarbons (*e.g.*, olefins), which are further converted to completely saturated species (*e.g.*, paraffins) due to the presences of hydrogen. Each Hydrocracker Unit includes several reactor vessels, and each reactor vessel is preceded by a gas-fired process heater. Reactor effluent goes to the hot separator, separating heavy hydrocarbons from light hydrocarbons. The light hydrocarbons from the hot separator are cooled and go to the cold separator, separating hydrogen from the light hydrocarbons, and wash water to remove ammonia. The hydrogen from the cold separator is scrubbed in an amine contactor to remove H_2S. The scrubbed hydrogen is compressed and recycled to the reactor section for additional conversion. The liquid hydrocarbons from the hot and cold separators go to a steam stripper before going to the fractionation section.

Condensed stripping steam and wash water from the separators are sent to the Sour Water Collection System. Amine rich with H_2S is sent to the Amine Regeneration Unit, and lean amine is returned to the amine contactor.

In the fractionation section, the stripped hydrocarbon liquid is separated into various product streams. Products from the fractionator section include fuel gas, LPG, light and heavy naphtha, kerosene, diesel, and a recycle stream (fractionator bottoms).

Emissions from the Hydrocracker Units include combustion products from the gas-fired reactor charge and fractionation section heaters and fugitive VOC emissions from valves, flanges, and seals on rotating equipment.

2.2.11 Delayed Cokers

Delayed coking is a thermal cracking process whereby vacuum residuum is converted to lighter liquid products and petroleum coke. The HEC refinery will include two Delayed Cokers, each using a semi-continuous process that employs two pairs of large coke drums that are alternately switched on- and off-line after filling with hot vacuum residuum.

The vacuum residuum feed is heated by heat exchangers and fed to the bottom of the fractionator column where it mixes with the fractionator column bottoms. The combined stream of vacuum residuum and fractionator bottoms is heated in the gas-fired process heaters to initiate coke formation in the coke drums. The formation of coke is a thermal cracking process in which the hot vacuum residuum thermally decomposes (*i.e.*, "cracks") into hydrocarbon vapors and coke. The hydrocarbon vapors leave the coke drum overhead and flow to the fractionator column. This column separates the cracked hydrocarbons into fuel gas, LPG, naphtha, light gas oil, and heavy gas oil.

After coking reactions are complete, the full coke drum is switched off-line and is steamed out and cooled. Vapors are captured by the closed blowdown system and recovered in the fractionator. After quenching and cooling, the coke drum bottom and top heads are opened. The coke is cut from the drum with a water jet and dropped into a pit where the free water is separated from the coke and recycled. A bridge crane is used to transfer the wet coke from the pit to a crusher. During the drum decoking process the coke is very wet because of the water jet

cutting, and fugitive dust emissions are minimal. The crushed, wet coke is transferred via an enclosed belt conveyor to a storage building. The enclosed belt conveyor and storage building will exhaust to fabric filter baghouses to minimize fugitive coke dust emissions.

Emissions from the Delayed Cokers include combustion products from the gas-fired coker furnaces; fugitive VOC emissions from valves, flanges, seals on rotating equipment, and from the coke pad; and fugitive particulate matter emissions from coke handling and transfer.

2.2.12 Sour Water Stripper Units

In the Sour Water Stripper Units, aqueous streams containing H_2S, other organic sulfur compounds, ammonia, and hydrocarbons, are collected from various process units and combined in a feed surge tank. Liquid hydrocarbons are skimmed from the water and returned to the recovered oil tank. The sour water is heated and charged to a stripper tower where H_2S and ammonia are removed in the overhead vapors and cooled by condensation. Condensed water reflux is returned to the stripper tower. The non-condensables and acid gases are routed to the Sulfur Recovery Plant. The stripped water is reused at the crude desalters and at process units requiring wash water (*e.g.* for ammonia removal). Any remaining stripped water is routed to the Wastewater Treatment Plant.

There are no fired heaters in the Sour Water Stripper Units. The only emissions are fugitive VOC and H_2S emissions from valves, flanges, and seals on rotating equipment.

2.2.13 Amine Regeneration Units

The Amine Regeneration Units regenerate the amine solution used in gas-liquid contactors in various refinery process units by thermally separating the acid gases from the amine solution. The Amine Regenerator is a liquid stripper column with steam-heated reboiler. Mixed H_2S-rich amine solutions are fed to the stripping column yielding an overhead acid gas product (mostly H_2S with CO_2 and ammonia) that is routed to the Sulfur Recovery Plant for conversion to elemental sulfur. The stripped amine bottoms liquid is cooled and filtered and then recycled back to a storage tank as lean (*i.e.*, H_2S-free) amine for re-use in the amine contactors.

There are no fired heaters in the Amine Regeneration Unit. The only emissions are fugitive VOC and H_2S emissions from valves, flanges, and seals on rotating equipment.

2.2.14 Sulfur Recovery Plant

The Sulfur Recovery Plant provides beneficial recovery of sulfur from, and safe disposal of, acid gas streams (mostly H_2S with CO_2 and ammonia) from throughout the facility. This includes the refinery's Sour Water Stripper Units and Amine Regeneration Units, the acid gas removal process at the HEC IGCC gasification block, and miscellaneous smaller process streams.

For reliability, the HEC refinery design includes six complete sulfur recovery trains, sized so that operation of all of the trains is not needed to meet the facility's sulfur recovery requirements (*e.g.*, four operating and two standby trains). Each sulfur recovery train will include a Claus reactor train, a tail gas treater, and a thermal oxidizer. The sulfur recovery trains will share common molten sulfur storage tanks, and a common rail loading facility for molten sulfur. The

Claus reactor trains will convert approximately 97 percent of the H_2S in the acid gas feed to elemental sulfur. The tail gas treaters will recover additional sulfur compounds from the Claus reactor tail gas and recycle them back to the inlet of the Claus reactors. Overall, the Claus reactors and tail gas treater combination will convert more than 99.9 percent of the H_2S in the sulfur plant feed to elemental sulfur. The tail gas treater exhaust gases, including unrecovered sulfur compounds, are routed to a thermal oxidizer to convert all reduced sulfur compounds to SO_2 before venting to the atmosphere.

The first stage of the Claus reactor train is a non-catalytic reaction furnace. Acid gas and either oxygen or air are charged to the furnace, where ammonia is converted to nitrogen and water and a portion of the feed sulfur is converted into SO_2 and water. The acid gas then flows through a series of three catalyst beds where H_2S and SO_2 react partially to form sulfur. The primary chemical reactions are:

$$2\ H_2S + 3\ O_2 \rightleftharpoons 2\ SO_2 + 2\ H_2O$$

$$2\ H_2S + SO_2 \rightleftharpoons 3\ S + 2\ H_2O$$

At normal operating temperatures and pressures, and an acid gas H_2S concentration of approximately 75 percent, the Claus process is thermodynamically limited to a sulfur recovery efficiency of approximately 97 percent. The achievable efficiency decreases with lower acid gas H_2S concentration. Each of the three reactor stages is followed by a condenser that cools, condenses, and removes the elemental sulfur. The molten sulfur flows through seal legs to a molten sulfur sump. The vapor from the last sulfur condenser then flows to the tail gas treater.

In addition to the two primary chemical reactions described above, secondary reactions also occur due to impurities in the system. Most importantly, hydrocarbons in the acid gas streams entering the thermal reactor are partially oxidized to form carbon dioxide and water, and carbon dioxide and unreacted hydrocarbons react with sulfur to form carbonyl sulfide (COS) and carbon disulfide (CS_2). These carbon-sulfur compounds are partially hydrolyzed in the first catalytic reactor to form H_2S, but a portion flows unreacted through the Claus reactor train.

In the tail gas treater, effluent from the Claus reactor train is combined with hydrogen or natural gas before passing through a reducing reactor and a catalytic hydrogenation reactor in series. This reaction sequence converts SO_2 and other sulfur compounds to H_2S. The primary chemical reaction is as follows:

$$3\ H_2 + SO_2 \rightleftharpoons H_2S + 2\ H_2O$$

The gas exiting the catalytic hydrogenation reactor is then routed to an amine absorber column where an aqueous solution of methyl diethanolamine ("MDEA") is used to scrub H_2S from the gas. The overhead stream from the final amine absorber column is routed to a thermal oxidizer for safe disposal of residual H_2S, COS, and CS_2. The rich amine solution is regenerated in a stripper column, and the resulting H_2S-rich acid gas is returned to the inlet of the Claus reactor train. Regenerated amine solvent is recirculated back to the amine absorber.

The thermal oxidizers in the sulfur recovery plant will use refinery fuel gas as an auxiliary fuel to ensure complete combustion of sulfur compounds to SO_2. To ensure fail-safe operation, these

devices will be enclosed, direct flame oxidizers, without booster fans, heat recovery, or other ancillary equipment that could malfunction and result in accidental release of untreated H_2S.

In the Claus sulfur sumps, residual H_2S is removed from the molten sulfur through a degassing process before the sulfur is pumped into one of two storage tanks. Liquid sulfur in the storage tanks is loaded into rail cars for shipment offsite. Vapors from the sumps and from the sulfur tanks are captured and routed to the inlet of the Claus reactor trains.

Emissions from the Sulfur Recovery Plant include combustion products from the tail gas thermal oxidizer and fugitive VOC and H_2S emissions from valves, flanges, and seals on rotating equipment.

2.2.15 Refinery Flares

As is standard practice in the petroleum refining industry, the HEC refinery will have a pressure relief system that would contain non-routine hydrocarbon releases for treatment by five elevated flares. In the event of process upset or sudden shutdown, these flares will accept discharges from pressure relief devices and emergency depressurizing equipment throughout the refinery. The relief vapors will be combusted at the elevated flare and the combustion products safely discharged to the atmosphere.

Refinery fuel gas and/or nitrogen is constantly purged up the flare stack column and is ignited at the top by a continuous pilot flame. The continous pilot flame keeps the flare ready to immediately receive and safely combust released gases, without relying on instantaneous pilot ignition. The pilot is continually monitored to confirm pilot operation and to effect a restart of the pilot if necessary. Steam will be supplied to the flare tip to ensure smokeless operation under normal operation. The preliminary height of each flare stack is 350 feet as required to limit the exposure of ground level equipment and personnel to the radiant heat of the flare flame.

Emissions from the refinery flares include combustion products from the pilot flame and from emergency releases.

2.2.16 Wastewater Treatment Plant

The wastewater treatment plant (WWTP) at the HEC Refinery has been designed, in conjunction with the overall facility water balance, to minimize water consumption and to maximize water recycle and reuse. In general, the dissolved solids content of the various process water discharge streams is used as a guide to assess its suitability for use as makeup water to other processes. For example, stripped sour water can be used as makeup wash water and for crude desalting at the Atmospheric Crude Distillation Units.

Segregating the clean stormwater from the oily process wastewater is essential to minimizing the contaminated wastewater requiring treatment. Clean stormwater will be collected in an impoundment basin for testing and/or recycle for use as makeup water. Excess clean stormwater will be discharged through a permitted outfall to surface drainage. These facilities are not considered a part of the WWTP.

In addition, certain aqueous streams are considered process streams and are treated within the refinery process units, separately from the WWTP. For example, sour water streams are segregated and stripped in the Sour Water Stripper Units to effect the removal and recovery of sulfides and ammonia rather than mixing the sour streams with the balance of the refinery wastewater for end-of-pipe treatment.

Facilities include wastewater collection, benzene stripping, primary treatment, secondary treatment, sludge treatment and sludge dewatering. Steam stripping is used to remove benzene for recycle to the process. Primary treatment is used to remove free oil and suspended solids prior to the secondary treatment. Secondary biological treatment is used to remove dissolved organic materials. Belt filter presses are used to reduce water content in primary and secondary sewage sludges prior to offsite transfer or disposal. Sludges may also be fed to the gasifiers in the IGCC power plant for energy recovery.

2.2.16.1 Wastewater Collection

Oily process wastewater streams, such as crude desalter water, crude oil tank water draws, and stormwater falling within curbed process areas, will be collected in a covered sewer system to minimize VOC emissions to the atmosphere. The remainder of the storm water runoff will be collected in the stormwater retention pond for reuse.

The oily water sumps, which normally receive contaminated oily wastewater, will have double containment for spill prevention and leak detection. These sumps will be vented via dedicated local carbon canisters to remove VOC from the vapor prior to atmospheric discharge. The enclosed surface wastewater collection system constitutes a closed system.

2.2.16.2 Steam Stripping

High benzene-containing wastewater streams, such as crude desalter water, will be routed to a steam stripping column. Steam is injected at the bottom of the column and strips out the benzene from the wastewater. The stripped wastewater is sent on to the API Separators or downstream units. The overhead vapor from the stripper column is condensed and allowed to phase separate into a hydrocarbon layer and an aqueous layer. The hydrocarbon layer is recycled back to the crude unit or other appropriate process unit. The aqueous layer is recycled back to the benzene stripper column.

2.2.16.3 API Separators

Two API Separators in parallel will remove suspended solids by sedimentation and will remove free oil (*i.e.*, insoluble hydrocarbons) by gravity separation. The API separators will be rectangular, above-ground, enclosed tanks in which the wastewater flows horizontally while the free oil particles float to the wastewater surface and settleable solids sink to the bottom. Surface skimmers collect the floating oils, which flow by gravity to a Recovered Oil Tank. Settled solids are raked to a collection well in the bottom of the API Separators where they are intermittently pumped to the Primary Sludge Thickener. The API Separator vessels are covered, and the vapor space is blanketed with inert gas (*e.g.*, nitrogen) as a safety measure. Conservation vents collect exhaust vapors and direct these vapors to a catalytic oxidizer for control of VOC emissions and for safe disposal of ammonia vapors.

2.2.16.4 Primary Dissolved Air Flotation ("DAF") Units

Effluent from the API Separators, containing residual emulsified oil, will be further treated by two Primary DAF Units in parallel. The API Separator effluent will flow by gravity to the Primary DAF Units. Chemicals will be added to the Primary DAF Unit influent stream to promote coagulation and flocculation of the emulsions in order to facilitate their removal in the Primary DAF Unit flotation cells. As the influent stream enters the flotation cell it comes in contact with micro-bubbles which are supplied by a DAF recycle stream. This DAF recycle stream has been saturated with nitrogen gas in the Saturation Tank before passing through the pressure reducing valve into the flotation cell. The micro-bubbles attach to the emulsions causing them to float to the liquid surface of the flotation cell. A float skimmer removes the float sludge from the water surface of the flotation cell where it is pumped to the Primary Sludge Thickener tank. Similarly, bottom sludges are conveyed by sludge scrapers to a bottom sludge well. This bottom sludge is also pumped to the Primary Sludge Thickener tank.

The Primary DAF Unit flotation cells are covered, and the vapor space is blanketed with inert gas (*e.g.*, nitrogen) as a safety measure. A compressor pulls suction from this vapor space and directs a portion of the gas stream to the Saturation Tank. This DAF recycle stream is sprayed into the Saturation Tank to promote the dissolution of inert gas in the water. The remainder of the exhaust vapors are collected and routed to a catalytic oxidizer for control of VOC emissions and for safe disposal of ammonia vapors.

2.2.16.5 Equalization Tanks

From the Primary DAF Units, the wastewater will be pumped to three Equalization Tanks. Each tank has a floating roof to minimize the escape of VOC, and operates in the "fill and draw" mode to provide equalization of both flow and concentration of influent to the Activated Sludge Biological Treatment process. Equalization Recycle Pumps draw from the Equalization Tank and direct the recycle flow to eductors within the Equalization Tank. The pH of the Primary DAF Separator effluent and the contents of the Equalization Tanks are monitored and adjusted if necessary within the Equalization Tanks through the addition of caustic soda or sulfuric acid.

2.2.16.6 Activated Sludge Biological Treatment

An activated sludge biological process will be employed for secondary treatment of refinery wastewater. This process uses a suspension of microorganisms in a wastewater consisting of suspended colloidal and dissolved organic and inorganic materials. Two Aeration Tanks will serve as the reactor vessels to provide sufficient mixing, dissolved oxygen, and residence time for the microorganisms (*i.e.* "activated sludge") to absorb the dissolved organics, to metabolize them and produce more microorganisms, and to convert the dissolved organics to carbon dioxide and water. The Aeration Tanks will be enclosed vessels with vents.

Phosphoric acid from a storage tank will be added to the wastewater stream to provide the nutrient phosphorus required by the microorganisms in the Aeration Tanks. Powder activated carbon (PAC) may be added in order to remove refractory and non-biodegradable organics in the wastewater.

Mixed liquor (sludge and water) from the Aeration Tanks will flow by gravity to the DAF Secondary Clarifiers. A portion of the sludge recovered from the DAF Secondary Clarifiers is recycled back to the Aeration Tanks.

2.2.16.7 DAF Secondary Clarifiers

Two DAF Secondary Clarifiers will be used to remove biological solids from the treated effluent of the activated sludge biological process. These vessels will use a dissolved air flotation process, similar to that employed in the Primary DAF Units. Most of the recovered microorganisms are recycled to the Aeration Tanks, while a slipstream is diverted as waste activated sludge (WAS) to the Secondary Sludge Thickener. The thickened WAS may be sent to the IGCC power plant and used as feed in the gasifiers, or it may be dewatered and trucked off site for disposal.

2.2.16.8 Additional Wastewater Treatment

The treated wastewater downstream of the Aeration Tanks will contain only trace quantities of VOC and will not be a source of air pollutant emissions, so no detailed descriptions of the treatment processes downstream of the Secondary DAF Clarifiers are provided herein. Additional wastewater treatment steps may include denitrification filters, a polishing filtration system, and primary and secondary sludge treatment and dewatering.

2.2.17 Tank Farm

The Tank Farm at the HEC petroleum refinery and IGCC power plant will comprise 104 above-ground cylindrical storage tanks for volatile organic liquids, 12 above-ground cylindrical storage tanks for water or inorganic liquids, and 31 pressurized storage vessels (*i.e.*, spheres or "bullets"). The organic liquid storage tanks and pressurized vessels are used for storing crude oil, intermediates, and finished products. A detailed listing of these tanks with contents, tank sizes, throughput, and emission estimation parameters is provided in Appendix C. General descriptions of the three types of organic liquid storage tanks that will be constructed at the HEC are presented in the following subsections.

2.2.17.1 Internal Floating Roof Tanks

Internal floating roof tanks are fixed-roof tanks with a floating roof resting on the liquid surface. This will be the predominant style of tank at the HEC and will be used to store all but the least volatile organic liquids. The floating roofs of these tanks will be equipped with a mechanical shoe primary seal (or liquid mounted seal) and a secondary rim seal for controlling fugitive vapor losses.

2.2.17.2 Fixed Cone Roof Tanks

Low volatility petroleum liquids will be stored in fixed cone roof tanks that are equipped with pressure/vacuum relief devices and are vented to atmosphere.

2.2.17.3 Pressurized Tanks, Bullets, and Spheroids

Pressurized tanks, including spheres and "bullets," are used for storing high vapor pressure material such as LPG, propane, and butane. These tanks are sealed pressure vessels and are to be maintained under constant working pressure. VOC emissions from these tanks are negligible.

2.2.18 Loading Racks

The transportation fuels that are the primary product of the HEC petroleum refinery will be shipped to market primarily by pipeline, but a relatively small quantity of product will be transported by rail cars and tank trucks. In addition, LPG may also be shipped offsite by rail cars and tank trucks. Separate terminals will be provided for railcar loading and for tank truck loading. All liquid product loading racks will be designed for complete capture and maximum recovery of displaced hydrocarbon vapors. For LPG loading, this will be achieved through vapor balancing. For gasoline and distillate product loading, this will be achieved using vacuum-regenerated carbon adsorption based vapor recovery technology. Small quantities of VOC will be emitted from the hydrocarbon vapor recovery system.

The refinery will also include a rail car loading rack for molten sulfur product. This loading rack is considered a part of the Sulfur Recovery Plant and is discussed in Section 2.2.14 herein.

2.2.19 Cooling Tower

Water is used in many areas of the refinery to remove process heat, condense vapor streams and cool products before storage. Warm cooling water is returned from the process areas and is circulated through a direct-contact cooling tower, where it is cooled by contact with air. A fraction of the water evaporates, removing the heat of vaporization, with subsequent reduction in the circulating cooling water temperature. The cooled water is then pumped back to the process areas for re-use. Cooling water use will be significantly reduced by the extensive use of air coolers in the refinery and IGCC Power Plant.

Emissions from the refinery cooling tower will include particulate matter, due to the dissolved solids content of aerosol drift from the tower, and VOC from evaporation of organic compounds that may be present in cooling water due to leaks in indirect contact heat exchangers. Continuous monitoring will be used to detect any such leaks, so as to provide for timely repair.

2.2.20 Product Blending

The HEC petroleum refinery will include gasoline and diesel blending units. At the gasoline blending unit, gasoline blending components such as light naphtha, reformate, isomerate, and the paraffinic product of the Butane Conversion Complex are blended to match retail product specifications. At the diesel blending unit, diesel and kerosene components are blended to match retail product specifications.

The only emissions from the product blending units are fugitive VOC emissions from valves, flanges, and seals on rotating equipment.

2.3 IGCC Power Plant

2.3.1 Feedstock Receiving, Storage, and Preparation

The HEC IGCC power plant will include facilities for receiving coal and petroleum coke via rail should the HEC coke production rate be less than needed to meet the facility's utility (*i.e.*, hydrogen, steam, and electricity) demands. The plant also will include facilities for storage of these materials, including petroleum coke produced at the HEC petroleum refinery, and facilities for rail loading to allow off-site shipment of petroleum coke produced at the HEC petroleum refinery.

Coke and coal delivered to the site by rail will be unloaded in an enclosed railcar unloading building. The coke or coal will drop from the rail car into a below-grade receiving hopper which will feed an enclosed conveyor. The coke/coal unloading building and conveyor drop point will be equipped with dust pickups and exhausted to a fabric filter baghouse to further minimize dust generated from the unloading operation. From the coke/coal railcar unloading building, the coke/coal will be conveyed to the coke storage building adjacent to the gasification feed preparation building. The belt conveyor will be entirely enclosed. Coke and coal in the storage building will be reclaimed in the building, and transported by enclosed conveyor to the gasification feed preparation building. The coke storage building will include separate areas for storage of coke and coal and will include separate reclaim facilities.

Petroleum coke will be transferred via enclosed belt conveyor from the coke storage building adjacent to the Delayed Coking Units to a covered storage building at the IGCC power plant. From the storage building, conveyors will be used to move the coke to the gasification feed preparation building. In the gasification feed preparation building, raw coke is fed continuously onto a weigh belt feeder, which regulates the flow into the grinding mill. Water and additives to improve slurry viscosity are added to the coke in the grinding mill. Each bin is equipped with a vibrator located at the bottom to prevent plugging during unloading. Slurry from the mill is continuously screened and transferred into agitated tanks, from which it is pumped to the gasifier feed injectors.

2.3.2 Flux Receiving, Storage, and Handling

Nonmetallic mineral flux for the gasification process, such as limestone or similar material, will be delivered to the site by rail, and flux unloading will occur in an enclosed railcar unloading building. The flux will drop from the rail car into a below-grade receiving hopper which will feed the flux onto a conveyor. The flux unloading building and conveyor drop point will be equipped with dust pickups and exhausted to a fabric filter baghouse to further minimize dust generated from the unloading operation. From the flux unloading building, the flux will be conveyed to the flux and slag storage building adjacent to the gasification feed preparation building. The belt conveyor will be entirely enclosed. Flux will be reclaimed directly into a hopper located in the flux and slag storage building, and transported by conveyor to the feed preparation building.

2.3.3 Air Separation Units

The Air Separation Units (ASU) produce high-purity oxygen and nitrogen for use in the IGCC power plant and the petroleum refinery. The first step in the process is to purify the air feed, which is accomplished by filtering, compressing, and cooling the air before passing it through a molecular sieve to remove water vapor, carbon dioxide, and hydrocarbons. This assures that these components will not contaminate the end products and will not freeze and plug the process piping when the air is cooled further downstream. In the next step, the cleaned air stream is sent to the main heat exchanger, where it is cooled to cryogenic temperature using cold product and reject streams returning from downstream processing within the ASU. In cooling the air, these product streams are warmed to near ambient temperature. This heat exchange reduces the refrigeration needed in the process.

Dropping the pressure of the chilled air using a cryogenic turbo expander provides additional cooling. The cold air leaving the main heat exchanger is sent to a distillation section where air is separated into its components of oxygen, nitrogen, and argon. All of the cryogenic equipment for air separation is contained in a "cold box." This is a large container that is sealed, nitrogen purged and packed with insulating material. When the oxygen and nitrogen product streams are of suitable purity, they are pumped to the pressure required for process use. Oxygen is provided for use in the gasification process and in the petroleum refinery sulfur recovery plant; nitrogen is provided for use in the acid gas removal process and for miscellaneous purposes, such as instrumentation, throughout the facility. Argon and excess nitrogen are vented to atmosphere. Storage facilities will be provided for liquid oxygen and liquid nitrogen.

There are no emissions units in the Air Separation Units.

2.3.4 Gasification System

As described in Section 2.1.2 herein, Hyperion is considering two configurations for the IGCC power plant. In the "maximum coke design case," the gasification system will include eight gasifiers and as many as six gasifiers may operate concurrently in steady-state mode. Under this design case, the gasifiers will be fed with either petroleum coke or a blend of coal and petroleum coke. In the "natural gas design case," the gasification system will include seven gasifiers and as many as five gasifiers may operate concurrently in steady-state mode. Under this design case, the gasifiers will be fed only with petroleum coke. Each design case includes two spare gasifiers in order to ensure sufficient reliability and availability. Other than the distinctions listed above, the gasification system is the same under both design cases, and the following description applies to both.

Each gasifier is a refractory-lined vessel operating at high pressure and high temperature. The vessel is divided into two sections. At the top, the refractory section of the gasifier is lined with multiple layers of high-temperature refractory brick. The feed slurry and oxygen are mixed and fed into the top of the gasifier using a water-cooled feed injector. It is in this gasification zone where reaction between the oxygen and slurry takes place. Because less than stoichiometric conditions exist, a partial oxidation occurs and both syngas and heat are produced. Any unburned feed forms ash or slag which will run down the sides of the refractory chamber and drip into the lower, water-cooled section.

The lower section of the gasifier is called the quench chamber. A water-cooled transition zone is located between the refractory chamber and the quench chamber. Water supplied to the transition zone provides cooling to the materials exposed to the high temperature along the syngas path between the refractory section and the water pool in the bottom of the quench section. The syngas bubbles up through the water in the quench chamber and leaves the vessel saturated with steam. The top of the quench section is equipped with baffles, which help to separate entrained water from the syngas. The water level in the quench chamber is controlled by removing water as a blowdown stream.

The ash in the feed is melted in the gasification zone and solidifies in the quench chamber to form a solid slag material. The slag accumulating in the bottom of the gasifier vessel, which includes some unreacted carbon as well as ash, is collected in a lockhopper. The lockhopper is periodically isolated from the gasifier so that accumulated slag can be flushed with water into a dewatering bin.

The raw syngas leaving the quench chamber is first routed to a spray tower scrubber vessel where particulate matter carried over with the gas from the quench chamber is removed. The raw syngas product from the gasifier consists primarily of hydrogen and carbon monoxide. Other constituents present in smaller quantities include CO_2, nitrogen, methane, H_2S, hydrogen chloride, hydrogen cyanide, COS, and ammonia. The Gasification System will have fugitive H_2S emissions from valves, flanges, and rotating equipment seals.

When a gasifier is started up or restarted, the temperature in the vessel must be slowly raised to gasification temperature in order to avoid damaging the gasifier vessel refractory. The gasifier is heated up by firing natural gas in a burner in the top of the gasifier vessel. The combustion gases from the startup burner are educted through the vessel using steam to a startup vent stack. Each gasifier has its own burner and eduction system with all vents being educted to the same vent stack. During shutdown and startup of the gasifiers, flaring of syngas is required. The gasifier and syngas clean up systems are designed so that clean syngas is flared. Emissions from the combustion products of natural gas and syngas will be released to the atmosphere.

2.3.5 Shift Conversion Reactors

The HEC IGCC power plant will include shift conversion reactors to facilititate hydrogen production and CO_2 capture. The shift conversion process uses one or more fixed bed catalytic reactors to produce hydrogen and CO_2 from steam and carbon monoxide. Other minor reactions that occur in the shift reactor are the conversion of COS to H_2S and the conversion of hydrogen cyanide (HCN) to ammonia (NH_3).

The shift reaction is exothermic, with a temperature rise of approximately 275 °F across the reactor. Before entering the shift reactor the syngas exiting the scrubber is heated to approximately 600 °F and is combined with steam to maintain the appropriate stoichiometric ratio of steam to carbon monoxide. The inlet syngas to the shift reactor exchanges heat with the hot gas exiting the shift reactor. The syngas leaving the shift reactor is first cooled by heating boiler feed water to generate high pressure steam. Additional syngas cooling occurs in other heat exchangers that preheat boiler feed water and by heating up the syngas entering the shift reactor.

Shifted syngas is then cooled to a temperature of approximately 75 °F with water in a desaturator vessel before being fed to the acid gas removal system.

Moisture removed from the syngas in the desaturator is recovered via condensation and is recycled for use as steam feed to the shift conversion reactors, for heating boiler feed water, and for low pressure steam generation.

The Shift Conversion Reactors will have fugitive H_2S emissions from valves, flanges, and rotating equipment seals.

2.3.6 Syngas Cleanup

2.3.6.1 Acid Gas Removal

The acid gas removal step at the IGCC power plant will use the Rectisol® wash process for the removal of acid gases (H_2S, COS and CO_2) from shifted syngas. The Rectisol® wash process is a physical gas wash system using methanol as solvent and operating at temperatures below water freezing point to produce a syngas with less than 1 part per million by volume (ppmv) of total sulfur. Methanol is used as the washing agent because it has a high selectivity for the removal of H_2S, COS and CO_2. External refrigeration is used to maintain the wash columns at low temperature levels, typically below -30 °F, for effective removal of CO_2 as well as sulfur compounds.

The acid gas removal process comprises an absorption section, for the removal of sour gas compounds from syngas, and a desorption section, for the regeneration of lean solvent. The absorber column is operated at high pressure and low temperatures, in which sour gas compounds (H_2S, COS and CO_2) are removed by methanol. The treated syngas from the absorption section is routed to the mercury removal process.

To recover the valuable hydrogen and CO dissolved in the loaded methanol, the solvent is first depressurized to flash small amounts of the co-absorbed components. This flash gas is routed back to the feed gas line to recover the products. Upon a further pressure reduction, CO_2 is flashed from the loaded methanol in an H_2S enrichment column. Nitrogen is used as stripping gas to improve the reduction of CO_2 in the methanol. Methanol from the sump of the H_2S enrichment column flows to a hot regeneration column, where the H_2S and the remaining CO_2 are stripped using steam. Lean methanol is collected from the bottom of the column, cooled, and routed back to the absorber column as regenerated washing agent.

The sulfur-rich acid gas stream from the acid gas removal process at the HEC IGCC gasification block will be routed to the sulfur recovery plant within the petroleum refinery. A high purity CO_2 stream is also produced by the Rectisol® wash process. This stream will contain trace quantities of CO and H_2S and will have two dispositions: 1) venting to the atmosphere; and 2) compression for off-site transport, such as would be required for sequestration or productive end use (*e.g.*, oil-field injection for enhanced oil recovery).

In addition to the CO_2 vent stream, the acid gas removal process will have fugitive VOC and H_2S emissions from valves, flanges, and rotating equipment seals.

2.3.6.2 Syngas Cleanup – Mercury Removal

The syngas exiting the acid gas removal step will pass through fixed beds of activated carbon that are specially impregnated to remove mercury (Hg). Multiple beds will be used to obtain optimized adsorption. The very low syngas temperature and moisture content achieved with the Rectisol® wash process will facilitate efficient mercury removal in the carbon beds. After mercury removal, the product syngas will be routed either to the PSA Unit and/or to the combustion turbines.

The mercury removal process will have fugitive H_2S emissions from valves, flanges, and rotating equipment seals.

2.3.7 Slag Handling, Storage, and Loading

The slag collected in the dewatering bins below the gasifiers will be conveyed wet to settling tanks for dewatering. The dewatered slag will be stored in the flux and slag storage building until it is loaded into railcars for offsite transport. The slag conveyor from the flux and slag storage building will be entirely enclosed, and the railcar loading will occur inside the flux unloading building. The dewatered slag is inert, moist, and is characterized by relatively large particle size. Typical uses of gasifier slag include road beds and landfill covers. The only emissions unit associated with the slag handling, storage, and loading processes will be the slag railcar loading operation. This will occur within the flux unloading building, which will be equipped with dust pickups and exhausted to a fabric filter baghouse to further minimize dust generated from the loading operation.

2.3.8 Pressure Swing Adsorption (PSA) Unit

A portion of the cleaned syngas will be piped to a PSA unit for production of pure hydrogen to be used in the petroleum refinery. Multiple molecular sieve absorbent beds are sequenced to absorb impurities and separate the hydrogen from the other gases (primarily nitrogen, methane, CO, and CO_2). The PSA tailgas, which contains nitrogen, methane, CO, and CO_2 and unrecovered hydrogen, is split into two parts. A portion of the PSA tailgas stream is compressed and recycled to the shift reactor in order to produce more hydrogen, and the remainder is used as fuel in the IGCC power plant.

There are no emissions units in the PSA Unit.

2.3.9 Combined Cycle Gas Turbines

The power/steam block at the HEC IGCC power plant will be sized to allow the refinery's steam and electrical power needs to be met with four combined cycle gas turbines operating concurrently (*i.e.*, with one unit offline). Each combined cycle gas turbine will include two main components: a combustion turbine-generator and a duct fired heat recovery steam generator (HRSG). High pressure steam from the HRSGs goes to two steam turbine-generator sets. The steam-electric generators drop the steam pressure down to an intermediate pressure for export to the refinery precesses. The remaining intermediate pressure steam is used to generate more

electricity in the intermediate and low pressure stages of the steam turbine generators before being condensed in coolers.

As described in Section 2.1.2 herein, Hyperion is considering two configurations for the IGCC power plant – a "maximum coke design case" and a "natural gas design case." In each case, ultra-low sulfur diesel fuel will be used for startup purposes and as backup fuel.

Electrical power generated in the combustion turbine-generators and the steam turbine-generators will be used to meet the refinery's electrical needs as well as the internal load of the IGCC power plant auxiliary facilities, including CO_2 compression.

2.3.9.1 Natural Gas Design Case

In the natural gas design case, the combustion turbines will be fired with natural gas during normal operation and will utilize dry low-NO_X burners. The duct burners will be fired with a combination of natural gas and PSA tailgas during normal operation and will be equipped with low-NO_X burners.

2.3.9.2 Maximum Coke Design Case

In the maximum coke design case, the combustion turbines will be fired with a combination of syngas and PSA tailgas during normal operation and will utilize diluent nitrogen injection for NO_X control. The duct burners will be fired with a combination of syngas, PSA tailgas, and natural gas during normal operation and will be equipped with low-NO_X burners.

2.3.10 Sour Water Treatment

The sour water stream produced in the spray tower scrubber vessel in the syngas cleanup system will be routed to a sour water stripper, similar to the refinery Sour Water Stripper Unit described in Section 2.2.12 herein. Sour gas from the stripper will be routed to the refinery Sulfur Recovery Plant, and the stripped sour water will be recycled to the gasification system.

2.3.11 CO_2 Compression

As described in Sections 2.3.5 and 2.3.6.1 herein, the HEC IGCC power plant will use shift conversion reactors and a Rectisol® wash process for effective removal and recovery of CO_2 from the syngas stream. The CO_2 recovered in the desorption section of the Rectisol® wash process will be dried, compressed and delivered to site battery limits for offsite use, sequestration, or disposal. The required duty (*i.e.*, electrical power) for CO_2 compression is expected to be approximately 81 MW.

2.4 Emergency Equipment

The Hyperion Energy Center will include four Diesel-powered emergency generators and two Diesel-powered emergency fire water pumps. Each of the emergency generators will have a rated output of approximately 600 kW and will fire No. 2 distillate fuel oil with sulfur content of no more than 15 parts per million by weight (ppmw). Because these generators are intended to provide basic plant power requirements during blackout conditions to maintain critical plant

operations, they are expected to be operated infrequently, with much of the operation being routine testing. Each of the Diesel-powered emergency fire water pumps will have a rated output of 2,250 kW and will supply fire water in the event that the main water supply system is inoperative.

Chapter 3. Analysis of Applicable Requirements.

This chapter presents an analysis of the applicability of federal and state air quality regulations to the Hyperion Energy Center project.

3.1 Prevention of Significant Deterioration

3.1.1 Determination of Applicable Major New Source Review Regulation

The HEC is proposed to be located in Union County, South Dakota. The entirety of Union County either is classified as an attainment area or is unclassifiable for all criteria pollutants. Therefore, Prevention of Significant Deterioration ("PSD") is the relevant preconstruction permitting program for all regulated NSR pollutants under title I of the Clean Air Act.

The South Dakota PSD rule, ARSD § 74:36:09, has not been approved into the South Dakota State Implementation Plan, codified at subpart QQ of 40 CFR part 52. Therefore, the federal PSD rule codified at 40 CFR § 52.21 will be applicable to the construction of the HEC.

3.1.2 Identification of Stationary Source

As discussed in Chapter 1 herein, the Hyperion Energy Center will comprise both a petroleum refinery and an IGCC-based power plant. In light of this unprecedented combination, RTP has elected to include in this PSD permit application a brief discussion of the criteria specified in the PSD regulation for defining the breadth of a stationary source.

The federal PSD rule, at 40 CFR § 52.21(b)(5)-(6), defines a stationary source as

> "[A]ll of the pollutant-emitting activities which belong to the same industrial grouping, are located on one or more contiguous or adjacent properties, *and* are under the control of the same person (or persons under common control) except the activities of any vessel. Pollutant-emitting activities shall be considered as part of the same industrial grouping if they belong to the same 'Major Group' (*i.e.*, which have the same first two digit code) as described in the Standard Industrial Classification Manual." (Emphasis added.)

Thus, in order to be considered part of a single stationary source, all pollutant-emitting activities must meet each of the three criteria (*i.e.*, same 2-digit SIC code and located on contiguous or adjacent properties and under the control of the same person). U.S. EPA has issued several interpretive policy guidance documents that clarify the meaning of these criteria. In particular, the preamble to the August 7, 1980 PSD final rule clarified that a support facility can be considered to have the same classification (*i.e.*, the same two-digit SIC code) as other facilities, even if the support facility includes units with a different two-digit SIC code than other units at

the stationary source, if the support facility assists in the production of the principal product of the stationary source:

> "Each source is to be classified according to its primary activity, which is determined by its principal product or group of products produced or distributed, or services rendered. Thus, one source classification encompasses both primary and support facilities, even when the latter includes units with a different two-digit SIC code. Support facilities are typically those which convey, store, or otherwise assist in the production of the principal product." [4]

All pollutant-emitting activities at the Hyperion Energy Center will be under common control and will be located on contiguous or adjacent sites. The petroleum refinery falls within two-digit SIC code 29. If the power plant were to sell a substantial quantity of electricity to outside users, its primary economic activity would be electric generation and transmission, and it would fall into the two-digit SIC code 49. However, the sole economic activities of the power plant at the Hyperion Energy Center will be the production of steam, electricity, and hydrogen in support of the petroleum refinery. Accordingly, RTP has determined that the power plant is a support facility for the petroleum refinery, and the two comprise a single stationary source.

3.1.3 Determination of Major Stationary Source Status and PSD Applicability

Once a source is determined to be major for at least one PSD-regulated pollutant, the potential emission rate of each PSD pollutant is compared to the corresponding PSD significant level to determine which pollutants trigger PSD permitting requirements.

Table 3.1-1 shows a comparison of the potential emission rates for the HEC project to the major stationary source thresholds and the PSD significant levels. As shown in Table 3-1, the proposed facility will be a major stationary source, and emissions will exceed the significant levels for nine PSD-regulated pollutants.

TABLE 3.1-1. PSD Applicability to Hyperion Energy Center

Pollutant	Potential Emissions (tpy)	Major Source Level (tpy)	Significant Level (tpy)	Significant?
Carbon Monoxide	1,998	100	100	Yes
Nitrogen Oxides	773	100	40	Yes
Sulfur Dioxide	863	100	40	Yes
VOC	473	100	40	Yes
PM	315	100	25	Yes
PM-10	1,009	100	15	Yes
PM-2.5	1,009	100	15	Yes
Hydrogen Sulfide	25	100	10	Yes
Sulfuric Acid Mist	80	100	7	Yes

[4] See *Federal Register*, August 7, 1980 (45 FR at 52695).

3.1.4 Summary of Applicable PSD Provisions

Pursuant to 40 CFR § 52.21(a)(2)(iii), Hyperion is prohibited from beginning actual construction of the HEC prior to issuance of a PSD permit indicating that the proposed major stationary source will meet the requirements of § 52.21(j) through (r). This PSD permit application is intended to demonstrate that each applicable regulatory requirement will be met, as summarized in the following paragraphs.

- § 52.21(j) requires that Best Available Control Technology (BACT) be applied to each emissions unit that emits any pollutant that the source will have the potential to emit in a significant amount. RTP's proposed BACT determinations and the information supporting these determinations are presented in Chapter 4 herein.
- § 52.21(k) requires a demonstration that the proposed major stationary source will not cause or contribute to air pollution in excess of a National Ambient Air Quality Standard or a PSD increment level. This demonstration is documented in RTP's PSD air quality impact analysis, which is presented in Appendix E to this permit application.
- § 52.21(l) stipulates that all estimates of ambient air pollutant concentrations shall be based upon certain air quality models and other specified information. RTP's PSD air quality impact analysis, presented in Appendix E to this permit application, conforms to these requirements.
- § 52.21(m) requires that the PSD permit application include an analysis of the ambient air quality in the area where the proposed major stationary source would locate and that the source owner or operator conduct such ambient post-construction monitoring as the Administrator determines is necessary. This analysis is documented in Appendix E to this permit application.
- § 52.21(n) requires that the PSD permit application include all information necessary to perform the analyses and make the determinations required by § 52.21(j)-(m), (o), and (p). This permit application includes all such information:
    - The nature, location, design capacity, specifications, and typical operating schedule of the proposed major stationary source are presented in Chapters 1 and 2 herein;
    - Drawings showing the plant's design and layout are presented in Appendix B to this permit application;
    - A detailed schedule for construction of the proposed major stationary source is presented in Chapter 1 herein;
    - Detailed descriptions of the systems of continuous emission reduction planned for the proposed major stationary source, and other information necessary to determine that BACT would be applied, are presented in Chapter 4 herein;
    - Emission estimates are presented in Chapter 5 herein; and
    - As requested by the Administrator, the permit application includes RTP's PSD air quality impact analysis, presented in Appendix E. This analysis includes information characterizing:
        - The air quality impact of the proposed major stationary source, including meteorological and topographical data necessary to estimate such impacts, and

  - The air quality impact, as well as the nature and extent, of all general commercial, residential, industrial, and other growth which has occurred since August 7, 1977, in the area the proposed major stationary source would impact.
- § 52.21(o) requires that the PSD permit application include analyses of the impairment to visibility, soils, and vegetation that would occur as a result of the proposed major stationary source, as well as an analysis of the air quality impact projected for the area as a result of general commercial, residential, industrial and other growth associated with the source. The growth impacts analysis is presented in Section 6 of this permit application and is supported by a population growth analysis presented in Appendix F to the permit application. The visibility impacts analysis is presented in Appendix E to this permit application. The soils and vegetation impacts analysis is presented in Appendix G to this permit application.
- § 52.21(p) stipulates that the Adminstrator shall provide notice to, consult with, and consider information provided by the Federal Land Manager relating to effects that the proposed major stationary source may have on the Class I areas. Although this paragraph of the PSD regulation does not directly impose any requirements on the owners or operators of the Hyperion Energy Center, the air quality impacts analysis requested by the Administrator pursuant to § 52.21(n) includes an analysis of impacts on Class I areas. RTP's impact analysis for Class I areas is presented in Chapter 7 herein.
- § 52.21(q) stipulates that the Adminstrator shall provide for public participation in the processing of this PSD permit application. This paragraph of the PSD regulation does not impose any requirements on the owners or operators of the Hyperion Energy Center.
- § 52.21(r) stipulates that a PSD permit must meet certain administrative requirements relating to permit expiration and enforcement. This paragraph of the PSD regulation does not impose any requirements on the owners or operators of the Hyperion Energy Center.

3.2 New Source Performance Standards

3.2.1 40 CFR Part 60, Subpart A

The provisions of subpart A apply to each affected facility under any New Source Performance Standards ("NSPS") rule in part 60. Subpart A contains general requirements for notifications, monitoring, performance testing, reporting, recordkeeping, and operation and maintenance provisions. These requirements will apply to affected facilities at the HEC under NSPS subparts Da, Ja, Kb, Y, NNN, OOO, RRR, IIII, and KKKK.

The applicable provisions of subpart A of 40 CFR part 60 are incorporated by reference at ARSD § 74:36:07:01.

3.2.2 40 CFR Part 60, Subpart Da

The provisions of subpart Da apply to electric utility steam generating units. In addition, as amended on June 13, 2007, this regulation applies to IGCC power plants. Based on its review of the amended applicability criteria at 40 C.F.R. § 60.40Da, RTP has determined that, under the maximum coke design case as described in Section 2.1.2 herein, each combined cycle gas

turbine in the HEC IGCC power plant, including both the stationary combustion turbine component and the duct burner component of each unit, is an affected facility under subpart Da. This conclusion is based on the fact combined cycle gas turbine meets all of the applicability criteria set forth at § 60.40Da(b). Specifically, each combined cycle gas turbine will be capable of combusting fossil fuel at a rate of more than 250 million Btu per hour, will be designed and intended to burn fuels containing 50 percent or more solid-derived fuel on a 12-month rolling average basis. [5]

Under the maximum coke design case, the combined cycle gas turbines do not meet the definition of IGCC electric utility steam generating unit at § 60.41Da because they will not supply more than one-third of their potential electric output capacity to a utility power distribution system for sale. Therefore, the combined cycle gas turbines in the HEC IGCC power plant are not subject to the NO_X emission standards at § 60.44Da(f) or the mercury emission standards at § 60.45Da(a) and § 60.45Da(b). [6] The combined cycle gas turbines are affected facilities subject to the NO_X emission standard of 1.0 lb per megawatt hour gross energy output, on a 30-day rolling average basis, pursuant to § 60.44Da(e)(1).

The provisions of subpart Da will not apply to the combined cycle gas turbines under the natural gas design case as described at Section 2.1.2 herein because less than 50 percent of the heat input will be derived from solid-derived fuel.

The pertinent provisions of subpart Da of 40 CFR part 60 are incorporated by reference at ARSD § 74:36:07:03.

3.2.3 40 CFR Part 60, Subpart Db

Subpart Db is not applicable because the HEC facility will not include any steam generating units that have a maximum design heat input capacity greater than or equal to 100 million British thermal units (MMBtu) per hour and that are not specifically exempted. In particular, under the natural gas design case, the heat recovery steam generators in the HEC IGCC power plant will be subject to the requirements of subpart KKKK and, pursuant to § 63.4305(b) of subpart KKKK, will be exempt from the requirements of subpart Db. Under the maximum coke design case, the heat recovery steam generators will be subject to the requirements of subpart Da and, pursuant to § 60.40b(e) of subpart Db, will be exempt from the requirements of subpart Db.

The pertinent provisions of subpart Db of 40 CFR part 60 are incorporated by reference at ARSD § 74:36:07:04.

---

[5] RTP has submitted to U.S. EPA a request for applicability determination. This request was received by U.S. EPA on August 21, 2007. To date, RTP has received no substantive response to this request.

[6] The mercury emission standard that would apply to the combustion turbines at the HEC IGCC power plant if they were electric utility steam generating units is 20 lbs per gigawatt-hour electric output, or approximately 2 lbs per trillion Btu heat input. The mercury emissions from the combustion turbines at the HEC IGCC power plant will be approximately 70 percent lower than this standard.

3.2.4 40 CFR Part 60, Subpart Dc

Subpart Dc is not applicable because the HEC facility will not include any steam generating units that have a maximum design heat input capacity greater than or equal to 10 MMBtu per hour and less than 100 MMBtu per hour.

The pertinent provisions of subpart Dc of 40 CFR part 60 are incorporated by reference at ARSD § 74:36:07:05.

3.2.5 40 CFR Part 60, Subpart J

The proposed refinery will include a sulfur recovery plant and numerous fuel gas combustion devices, each of which would be an affected facility under subpart J as that rule currently exists. However, EPA has recently proposed to make minor revisions to subpart J and, more importantly for the HEC, to supersede subpart J with a new NSPS subpart Ja for facilities that commence construction after May 14, 2007. The requirements of the proposed subpart Ja are at least as stringent as all corresponding provisions of subpart J. Therefore, for the purposes of this permit application, RTP has assumed that subpart Ja will be promulgated prior to issuance of the HEC PSD permit and that the HEC will be exempt from all provisions of subpart J.

The applicable provisions of subpart J of 40 CFR part 60 are incorporated by reference at ARSD § 74:36:07:46.

3.2.6 40 CFR Part 60, Subpart Ja

Subpart Ja was proposed by EPA on May 14, 2007 and would apply to affected facilities that commence construction after that date. The proposed refinery will include numerous affected facilities that would be subject to the requirements of subpart Ja. Based on the proposed rule, which are subject to change prior to promulgation, the applicable emission standards for the HEC would include the following:

- The sulfur recovery plant will be subject to the concentration standard under the proposed § 60.102a(e)(1). This standard limits the combined concentration of SO_2 and reduced sulfur compounds to 250 ppmv, dry basis, corrected to zero percent excess air and reported as SO_2, based on an hourly rolling 12-hour average.
- The sulfur recovery plant will be subject to the concentration standard under the proposed § 60.102a(e)(3). This standard limits the concentration of H_2S to 10 ppmv, dry basis, corrected to zero percent excess air, based on an hourly rolling 12-hour average.
- Each of the process heaters listed in Table 3.2-1 will be subject to the NO_X concentration standard of 80 ppmv, dry basis, corrected to zero percent excess air, based on an hourly rolling 24-hour average, under the proposed § 60.102a(g)(3).
- Each of the process heaters listed in Table 3.2-1 will be subject to the fuel gas sulfur concentration standards of 160 ppmv, based on an hourly rolling 3-hour rolling average, and 60 ppmv, based on a daily rolling 365-day average, under the proposed § 60.102a(h)(2).

- Each of the other fuel gas combustion devices listed in Table 3.2-2 will be subject to the fuel gas H_2S concentration standards of 160 ppmv, based on an hourly rolling 3-hour rolling average, and 60 ppmv, based on a daily rolling 365-day average, under the proposed § 60.102a(h)(1).
- Each of the petroleum refinery process units described in Section 2.2 herein, as well as the gasification system described in Section 2.3.4 herein, is a fuel gas producing unit and will be subject to the work practice standards under the proposed § 60.103a.

Note that the HEC will not include a fluid catalytic cracking unit or a fluid coking unit, so the requirements for those types of facilities will not apply.

TABLE 3.2-1. Petroleum Refinery Process Heaters

Process Heater	Heat Input Capacity
No. 1 Atmospheric Crude Charge Heater	530.2 MMBtu/hr (HHV)
No. 2 Atmospheric Crude Charge Heater	530.2 MMBtu/hr (HHV)
No. 1 Vacuum Charge Heater	214.7 MMBtu/hr (HHV)
No. 2 Vacuum Charge Heater	214.7 MMBtu/hr (HHV)
Naphtha Hydrotreater Charge Heater	199.6 MMBtu/hr (HHV)
Naphtha Hydrotreater Stripper Reboiler Heater	168.8 MMBtu/hr (HHV)
Naphtha Splitter Reboiler Heater	246.8 MMBtu/hr (HHV)
Distillate Hydrotreater Feed Heater	140.6 MMBtu/hr (HHV)
Delayed Coker Heater No. 1A	242.5 MMBtu/hr (HHV)
Delayed Coker Heater No. 1B	242.5 MMBtu/hr (HHV)
Delayed Coker Heater No. 2A	242.5 MMBtu/hr (HHV)
Delayed Coker Heater No. 2B	242.5 MMBtu/hr (HHV)
No. 1 Platformer Charge & 1st Interheater	824.5 MMBtu/hr (HHV)
No. 2 Platformer Charge & 1st Interheater	824.5 MMBtu/hr (HHV)
No. 1 Platformer 2nd & 3rd Interheaters	492.9 MMBtu/hr (HHV)
No. 2 Platformer 2nd & 3rd Interheaters	492.9 MMBtu/hr (HHV)
Oleflex Heater	604.4 MMBtu/hr (HHV)
Reformate Splitter Reboiler	138.0 MMBtu/hr (HHV)
No. 1 Hydrocracker Fractionator Feed Heater	675.5 MMBtu/hr (HHV)
No. 2 Hydrocracker Fractionator Feed Heater	675.5 MMBtu/hr (HHV)
No. 1 Hydrocracker Heater 1A	66.9 MMBtu/hr (HHV)
No. 2 Hydrocracker Heater 1A	66.9 MMBtu/hr (HHV)
No. 1 Hydrocracker Heater 1B	66.9 MMBtu/hr (HHV)
No. 2 Hydrocracker Heater 1B	66.9 MMBtu/hr (HHV)
No. 1 Hydrocracker Heater 1C	66.9 MMBtu/hr (HHV)
No. 2 Hydrocracker Heater 1C	66.9 MMBtu/hr (HHV)
No. 1 Hydrocracker Heater 2A	64.9 MMBtu/hr (HHV)
No. 2 Hydrocracker Heater 2A	64.9 MMBtu/hr (HHV)
No. 1 Hydrocracker Heater 2B	64.9 MMBtu/hr (HHV)
No. 2 Hydrocracker Heater 2B	64.9 MMBtu/hr (HHV)

TABLE 3.2-2. Other Fuel Gas Combustion Devices

Process Heater	Heat Input Capacity
Refinery Flare No. 1	N/A
Refinery Flare No. 2	N/A
Refinery Flare No. 3	N/A
Refinery Flare No. 4	N/A
Refinery Flare No. 5	N/A
IGCC Power Plant Flare	N/A
Wastewater Treatment Plant Catalytic Oxidizer	N/A
Combined Cycle Gas Turbine No. 1	1,677.4 MMBtu/hr (HHV)
Combined Cycle Gas Turbine No. 2	1,677.4 MMBtu/hr (HHV)
Combined Cycle Gas Turbine No. 3	1,677.4 MMBtu/hr (HHV)
Combined Cycle Gas Turbine No. 4	1,677.4 MMBtu/hr (HHV)
Combined Cycle Gas Turbine No. 5	1,677.4 MMBtu/hr (HHV)

3.2.7 40 CFR Part 60, Subpart Kb

Subpart Kb applies to each storage vessel that is used to store volatile organic liquids and meeting certain threshold criteria for vessel size and stored material vapor pressure. The provisions of subpart Kb include requirements for control equipment design, operation, and maintenance, as well as recordkeeping and reporting requirements.

The proposed refinery will include numerous storage tanks meeting these criteria. All of these are Group 1 storage vessels under subpart CC of 40 CFR part 63 as discussed in Section 3.3.13 herein. Pursuant to § 63.640(n)(2) of subpart CC, Group 1 storage vessels are not required to comply with the provisions of subpart Kb.

The only tanks at the proposed HEC petroleum refinery that are required to comply with the provisions of subpart Kb are the Sour Water Tanks. These tanks will be used to store liquids with a maximum true vapor pressure less than 76.6 kilopascals (kPa). Compliance with the provisions of subpart Kb will be achieved using a fixed roof in combination with an internal floating roof.

It is worth noting that, in addition to the storage tanks discussed above, the proposed refinery will include several tanks in the Wastewater Treatment Plant. These tanks are "flow-through" tanks that, under current U.S. EPA policy, are not "used for the storage of volatile organic liquids" and are not storage vessels subject to the provisions of subpart Kb.

The applicable provisions of subpart Kb of 40 CFR part 60 are incorporated by reference at ARSD § 74:36:07:14.

3.2.8 40 CFR Part 60, Subpart Y

Subpart Y prohibits visible emissions of 20 percent opacity or greater from any coal processing and conveying equipment, coal storage system, or coal transfer and loading systems. The coal unloading, conveying, storage, and crushing facilities at the proposed HEC IGCC power plant will be subject to this visible emissions standard.

The applicable provisions of subpart Y of 40 CFR part 60 are incorporated by reference at ARSD § 74:36:07:16.

3.2.9 40 CFR Part 60, Subpart GG

The stationary gas turbines in the HEC IGCC power/steam block will be exempt from the requirements of subpart GG. Specifically, under the natural gas design case as described in Section 2.1.2 herein, the gas turbines will be subject to the requirements of subpart KKKK and, pursuant to § 63.4305(b) of subpart KKKK, will be exempt from the requirements of subpart GG. Under the maximum coke design case, the gas turbines will be subject to the requirements of subpart Da and, pursuant to § 60.40Da(b) of subpart Da, will be exempt from the requirements of subpart GG.

The pertinent provisions of subpart GG of 40 CFR part 60 are incorporated by reference at ARSD § 74:36:07:18.

3.2.10 40 CFR Part 60, Subpart UU

Subpart UU applies to asphalt processing operations, including asphalt storage tanks. The Coker Charge Tanks at the proposed refinery will store vacuum residuum, a material that is very similar to asphalt. These tanks are not affected facilities under subpart UU, however, because the vacuum residuum will not be used as asphalt and do not appear to fall within the intended applicability of U.S. EPA in establishing this regulation.

The pertinent provisions of subpart UU of 40 CFR part 60 are incorporated by reference at ARSD § 74:36:07:71.

3.2.11 40 CFR Part 60, Subpart VV

Subpart VV applies to process units that produce, as an intermediate or final product, any of the chemicals listed at § 60.489 of subpart VV. None of the chemicals included in that list will be produced by any of the process units at the HEC. Further, pursuant to § 63.640(p) of subpart CC of 40 CFR part 63, because each process unit at the proposed refinery will be subject to the provisions of subpart CC, compliance with subpart VV would not be required even if one of the listed chemicals were produced at the proposed HEC.

The pertinent provisions of subpart VV of 40 CFR part 60 are incorporated by reference at ARSD § 74:36:07:22.

3.2.12 40 CFR Part 60, Subpart XX

Subpart XX applies to loading racks at bulk gasoline terminals, including those that are collocated with petroleum refineries. Pursuant to § 63.640(r) of subpart CC of 40 CFR part 63, because each gasoline loading rack at the proposed refinery will be subject to the provisions of subpart CC, compliance with the provisions of subpart XX is not required.

The pertinent provisions of subpart XX of 40 CFR part 60 are incorporated by reference at ARSD § 74:36:07:23.

3.2.13 40 CFR Part 60, Subpart GGG

Subpart GGG applies to petroleum refinery process units and includes requirements relating to equipment leaks. Pursuant to § 63.640(p) of subpart CC of 40 CFR part 63, because each process unit at the proposed refinery will be subject to the provisions of subpart CC, compliance with the provisions of subpart GGG is not required.

The pertinent provisions of subpart GGG of 40 CFR part 60 are incorporated by reference at ARSD § 74:36:07:76.

3.2.14 40 CFR Part 60, Subpart III

Subpart III applies to air oxidation reactors that are part of a process unit that produces, as a product, co-product, by-product, or intermediate, any of the synthetic organic chemicals listed at § 60.617 of subpart III. None of the process units at the HEC refinery that will produce listed chemicals include an air oxidation reactor.

The pertinent provisions of subpart III of 40 CFR part 60 are incorporated by reference at ARSD § 74:36:07:78.

3.2.15 40 CFR Part 60, Subpart NNN

Subpart NNN applies to distillation units that are part of a process unit that produces, as a product, co-product, by-product, or intermediate, any of the synthetic organic chemicals listed at § 60.667 of subpart NNN.

The proposed refinery will include six affected facilities. The distillation units and their products are as follows:

- De-ethanizer, depropanizer, and debutanizer columns, producing ethane, propane, and butane, in the Gas Plant;
- Stabilizer column, producing isopentane and 2-methylpentane, in the Penex Isomerization Unit;
- Stabilizer column, producing cyclohexane, in the BenSat Unit;
- Deisobutanizer column, producing isobutane, in the Butane Conversion Complex;
- Stabilizer column, producing butane and isobutane, in the Butane Conversion Complex; and
- Stripper column, producing isobutylene, in the Butane Conversion Complex.

Compliance with § 60.662(a) of subpart NNN will be achieved by routing the vent streams from these affected facilities to the refinery fuel gas system system and combusting the fuel gas in enclosed combustion devices.

Other process units at the proposed refinery do not produce listed synthetic organic chemicals and, therefore, are not subject to the provisions of subpart NNN.

The applicable provisions of subpart NNN of 40 CFR part 60 are incorporated by reference at ARSD § 74:36:07:26.

3.2.16 40 CFR Part 60, Subpart OOO

All emissions units associated with flux processing at the proposed HEC, with the exception of the railcar unloading operation and the the transfer from belt conveyor to storage pile within the flux and slag storage building, will be affected facilities subject to the provisions of 40 CFR part 60 subpart OOO. All of these emissions units will be enclosed within buildings, and Hyperion will achieve compliance with respect to the buildings themselves as provided by 40 CFR § 60.672(e).

The applicable provisions of subpart OOO of 40 CFR part 60 are incorporated by reference at ARSD § 74:36:07:27.

3.2.17 40 CFR Part 60, Subpart QQQ

Subpart QQQ applies to wastewater treatment facilities at petroleum refineries. All wastewater streams at the proposed HEC refinery will be treated as Group 1 wastewater streams under subpart CC of 40 CFR part 63. Pursuant to § 63.640(o) of subpart CC, wastewater treatment facilities that are used to treat Group 1 wastewater streams are not required to comply with the provisions of subpart QQQ.

The pertinent provisions of subpart QQQ of 40 CFR part 60 are incorporated by reference at ARSD § 74:36:07:82.

3.2.18 40 CFR Part 60, Subpart RRR

Subpart RRR applies to reactor processes that are part of a process unit that produces, as a product, co-product, by-product, or intermediate, any of the synthetic organic chemicals listed at § 60.707 of subpart RRR.

The proposed refinery will include four affected facilities. The reactor processes and their products are as follows:

- Isomerization reactors, producing isopentane and 2-methylpentane, in the Penex Isomerization Unit;
- Saturation reactor, producing cyclohexane, in the BenSat Unit;
- Butamer isomerization reactor, producing isobutane, in the Butane Conversion Complex; and
- Oleflex dehydrogenation reactors, producing isobutylene, in the Butane Conversion Complex.

Compliance with § 60.702(a) of subpart RRR will be achieved by routing the vent streams from these affected facilities to the refinery fuel gas system system and combusting the fuel gas in enclosed combustion devices.

The pertinent provisions of subpart RRR of 40 CFR part 60 are incorporated by reference at ARSD § 74:36:07:32.

3.2.19 40 CFR Part 60, Subpart IIII

Subpart IIII applies to stationary, compression ignition, internal combustion engines. The Diesel engines in the emergency generators and the emergency fire water pumps at the HEC are emergency stationary internal combustion engines under this rule. Accordingly, Hyperion will be required to purchase engines that are certified to the emission standards specified in the rule and must also install a non-resettable hour meter on each engine prior to initial startup. The applicable emission standards for pollutants other than SO_2 vary under § 60.4205(b) and (c) depending on the year that the engine is ordered from the engine or fire water pump manufacturer. In addition, SO_2 emissions are required to be minimized by burning only Diesel fuel meeting the requirements of 40 CFR § 80.510(a) until September 30, 2010, including a maximum sulfur content of 500 parts per million by weight (ppmw), and meeting the requirements of § 80.510(b) after that date, including a maximum sulfur content of 15 ppmw.

The applicable provisions of subpart IIII of 40 CFR part 60 are incorporated by reference at ARSD § 74:36:07:88.

3.2.20 40 CFR Part 60, Subpart KKKK

The provisions of subpart KKKK apply to most stationary combustion turbines. Under the maximum coke design case, the combustion turbines at the HEC IGCC power plant are subject to the provisions of subpart Da of 40 CFR part 60 and are exempt from the provisions of subpart KKKK pursuant to 40 CFR § 60.40Da(b).

Under the natural gas design case, the combined cycle gas turbines will be affected facilities subject to the provisions of subpart KKKK.

The pertinent provisions of subpart KKKK of 40 CFR part 60 are incorporated by reference at ARSD § 74:36:07:89.

3.3 National Emission Standards for Hazardous Air Pollutants

3.3.1 40 CFR Part 61, Subpart A

The provisions of subpart A apply to each affected facility under any NESHAP rule in part 61, as specified in the relevant NESHAP regulation for that facility type. Subpart A contains general requirements for notifications, monitoring, performance testing, reporting, recordkeeping, and operation and maintenance provisions. These provisions are applicable to the HEC petroleum refinery pursuant to subpart FF.

The applicable provisions of subpart A of 40 CFR part 61 are incorporated by reference at ARSD § 74:36:08:01.

3.3.2 40 CFR Part 61, Subpart J

Subpart J applies to equipment that contains or contacts a fluid that is at least 10 percent benzene by weight. None of the process units at the proposed HEC refinery will include any equipment meeting this criterion. Therefore, the requirements of Subpart J are not applicable.

The pertinent provisions of subpart J of 40 CFR part 61 are incorporated by reference at ARSD § 74:36:08:02.01.

3.3.3 40 CFR Part 61, Subpart Y

Subpart Y applies to storage tanks that store benzene having a specific gravity within the range of specific gravities specified in ASTM D 836-84, ASTM D 835-85, or ASTM D 4734-87. None of the storage tanks at the proposed HEC refinery will meet this criterion. Therefore, the requirements of Subpart Y are not applicable.

3.3.4 40 CFR Part 61, Subpart BB

Subpart BB applies to loading racks that load benzene-containing fluids. However, loading of gasoline, petroleum distillates, crude oil, natural gas liquids, and benzene-laden waste are specifically exempted from this rule. None of the loading racks at the proposed HEC refinery will load any benzene-containing liquids other than those covered by the exemption. Therefore, the requirements of Subpart BB are not applicable.

3.3.5 40 CFR Part 61, Subpart FF

Subpart FF includes requirements for reducing the quantity of benzene in facility waste and for the design and operation of equipment used to handle or treat benzene-containing wastes. The specific requirements for a particular facility depend on the quantity of benzene in facility waste. Hyperion will comply with the provisions of 40 CFR § 61.342(c) rather than claiming less stringent emission standards as provided by § 61.342(d), (e), or (f).

The requirements of subpart FF are applicable to the Wastewater Collection System, the Benzene Stripper, the API Separators, the Primary DAF Units, and the Equalization Tanks, all of which are described in Section 2.2.16 herein. The requirements of subpart FF also will apply to the Slop Oil Tanks described in Section 2.2.17 herein. Specifically, the rule applies to this equipment to the extent that they are used to manage and treat waste streams that contain more than 10 ppm benzene, by weight, on a flow-weighted annual average basis. The HEC petroleum refinery will include several process wastewater streams that contain benzene in concentrations lower than this threshold amount at the point of waste generation. In addition, the Benzene Stripper will be designed and operated to achieve a benzene concentration less than 10 ppm by weight in the aqueous effluent routed to the API Separators. Nonetheless, in order to be conservative, all wastewater streams will be treated as non-exempt process wastewater streams up to the point where they enter the Aeration Tanks. The requirements of subpart FF will not apply to the Aeration Tanks pursuant to § 61.348(b)(2).

For the wastewater collection system, subpart FF requires that each junction box be equipped with a cover and that each drain be equipped with either water seal controls or more effective

controls, such as carbon canisters. The drains at the HEC petroleum refinery will be equipped with dual carbon canisters.

For the API Separators, Primary DAF Units, Equalization Tanks, and Slop Oil Tank, subpart FF requires either a floating roof or a closed-vent system and a control device. The API Separators and the Primary DAF Units at the HEC petroleum refinery will be equipped with closed vent systems and a catalytic oxidizer. The Equalization Tanks will be will be external floating roof tanks and the Slop Oil Tanks will be internal floating roof tanks.

3.3.6 40 CFR Part 63, Subpart A

The provisions of subpart A apply to each affected source under any NESHAP rule in part 63, as specified in the relevant NESHAP regulation for that source type. Subpart A contains general requirements for notifications, monitoring, performance testing, reporting, recordkeeping, and operation and maintenance provisions. The requirements of subpart A will apply to the HEC as provided by subparts B, CC, UUU, and ZZZZ of 40 CFR part 63.

The applicable provisions of subpart A of 40 CFR part 63 are incorporated by reference at ARSD § 74:36:08:03.

3.3.7 40 CFR Part 63, Subpart B

Most of the regulations in 40 CFR part 63, including subpart F through subpart DDDDD discussed below, are source category-specific NESHAP regulations implementing Clean Air Act § 112(d). Each of these source category-specific NESHAP includes the U.S. EPA's determination of the Maximum Achievable Control Technology (MACT) for the specified source category.

For emission units that are located at major sources of HAPs and that are not subject to a source category-specific NESHAP, Clean Air Act §§ 112(g) and 112(j) generally require case-by-case determinations of MACT. These requirements are implemented through the provisions of subpart B of 40 CFR part 63.

There are two separate and distinct sets of requirements in subpart B. The first, at §§ 63.40 through 63.44, implements § 112(g) of the Clean Air Act. These provisions apply to construction or reconstruction of major sources of HAP at which there are HAP-emitting units that have neither been regulated nor exempted from regulation under a source category-specific NESHAP.

For the proposed refinery, most HAP-emitting units are exempt from the provisions of §§ 63.40 through 63.44 because they either are regulated or are specifically exempted from regulation under a source category-specific NESHAP. The only exceptions are the petroleum refinery process heaters, which would be subject to the requirements of subpart DDDDD of 40 CFR part 63 but for the recent vacatur of that regulation by the D.C. Circuit Court of Appeals.[7] The required case-by-case MACT analyses for the process heaters are presented in Chapter 9 herein.

[7] *NRDC, et al. v EPA*. No. 04-1385. June 8, 2007.

The second set of provisions, at §§ 63.50 through 63.56 of subpart B, implements § 112(j) of the Clean Air Act. These provisions apply to major sources of HAPs in source categories for which the U.S. EPA has failed to promulgate a source category-specific NESHAP within 18 months after the scheduled promulgation date for that regulation. These provisions, as well as the requirements of §§ 63.40 through 63.44 discussed above, apply to the petroleum refinery process heaters. The only preconstruction review requirement in these rules is at § 63.54(a)(2), which simply requires compliance with the requirements of §§ 63.40 through 63.44. As described above and as further detailed in the application for a case-by-case MACT determination in Chapter 9 herein, compliance with these requirements is addressed through this preconstruction permit application.

The applicable provisions of subpart B of 40 CFR part 63 are incorporated by reference at ARSD § 74:36:08:03.01.

3.3.8 40 CFR Part 63, Subpart F

Subpart F applies to chemical manufacturing process units that manufacture, as a primary product, any of the synthetic organic chemicals listed in Table 1 of subpart F. None of the process units at the proposed HEC refinery will produce as its primary product any of the listed chemicals. Therefore, none of the process units at the proposed refinery is subject to subpart F.

The pertinent provisions of subpart F of 40 CFR part 63 are incorporated by reference at ARSD § 74:36:08:05.

3.3.9 40 CFR Part 63, Subpart G

Subpart G applies to chemical manufacturing process units that manufacture, as a primary product, any of the synthetic organic chemicals listed in Table 1 of subpart F of 40 CFR part 63. None of the process units at the proposed HEC refinery will produce as its primary product any of the listed chemicals. Therefore, none of the process units at the proposed refinery is subject to subpart G. However, specific requirements for storage vessels under subpart G are applicable to certain storage tanks at the proposed refinery pursuant to § 63.646(a) of subpart CC of 40 CFR part 63.

The pertinent provisions of subpart G of 40 CFR part 63 are incorporated by reference at ARSD § 74:36:08:06.

3.3.10 40 CFR Part 63, Subpart H

Subpart H applies to pumps, compressors, agitators, pressure relief devices, sampling connection systems, valves, connectors, and instrumentation systems. This regulation is applicable to specific categories of sources where other applicable NESHAP regulations reference its requirements. It is applicable to the proposed HEC refinery pursuant to § 63.648(a) of subpart CC of 40 CFR part 63.

The pertinent provisions of subpart H of 40 CFR part 63 are incorporated by reference at ARSD § 74:36:08:07.

3.3.11 40 CFR Part 63, Subpart Q

The cooling tower at the proposed HEC will be an industrial process cooling tower that will be exempt from the provisions of 40 CFR 63 subpart Q because it will not use chromium-based water treatment chemicals.

The pertinent provisions of subpart Q of 40 CFR part 63 are incorporated by reference at ARSD § 74:36:08:11.

3.3.12 40 CFR Part 63, Subpart R

Subpart R applies to bulk gasoline terminals, but exempts gasoline terminals that are contiguous with a petroleum refinery and that operate under Standard Industrial Classification code 2911 (facilities with petroleum refining as their primary business activity). The gasoline loading racks at the proposed HEC meet this exemption and, therefore, are not affected sources to which subpart R is applicable. Compliance with several provisions of subpart R is required for the proposed refinery's gasoline loading racks, however, pursuant to subpart CC of 40 CFR part 63, as discussed below.

The pertinent provisions of subpart R of 40 CFR part 63 are incorporated by reference at ARSD § 74:36:08:12.

3.3.13 40 CFR Part 63, Subpart CC

Subpart CC is a far-reaching regulation that imposes HAP emission standards for various refinery operations, including storage vessels, equipment leaks, wastewater streams, gasoline loading racks, process vents, and marine tank vessel loading operations. All of the HEC petroleum refinery process units, described in Section 2.2 herein, are part of an affected source under subpart CC. Accordingly, many of the emission units at the proposed HEC petroleum refinery are subject to these emission standards.

None of the process units in the HEC IGCC power plant are used primarily for producing transportation fuels, heating fuels, or lubricants; for separating petroleum; or for separating, cracking, reacting, or reforming intermediate petroleum streams. Thus, the process units at the IGCC power plant are not petroleum refining process units as that term is defined at § 63.641 of subpart CC, and they are not part of the affected source under subpart CC.

With the exception of the vessels in the Wastewater Treatment Plant, as described in Section 2.2.16 herein, and the pressurized tanks, bullets, and spheroids, as described in Section 2.2.17.5 herein, all of the tanks at the proposed HEC petroleum refinery are subject to the storage vessel provisions of subpart CC. (These types of tanks are specifically excluded from the definition of storage vessel at § 63.641 of subpart CC.) Several of the tanks will store materials with negligible HAP content and/or low vapor pressure and are therefore classified as Group 2 storage vessels under subpart CC. The provisions of subpart CC that are applicable to these storage tanks include recordkeeping and reporting requirements. The Group 2 storage vessels are as follows:

- Rich amine storage tanks
- Lean amine storage tanks
- Vacuum gas oil storage tanks
- Coker heavy gas oil storage tanks
- Atmospheric gas oil storage tank
- Coker charge tanks
- Stormwater tanks
- Potable water tanks
- Fire water tanks
- Sulfur tanks
- Caustic storage tanks

The remaining 122 storage tanks at the proposed refinery are classified as Group 1 storage vessels and are subject to the control requirements under subpart CC. The control requirements for these Group 1 storage vessels are the requirements set forth at § 63.119 of subpart G of 40 CFR part 63, pursuant to § 63.646(a) of subpart CC. Several compliance options are available, including the use of an external floating roof, a fixed roof with an internal floating roof, or a closed-vent system and control device.

Equipment leaks at the proposed refinery will be subject to the leak detection and repair program requirements in subpart H of 40 CFR part 63, pursuant to § 63.648(a) of subpart CC. The applicable requirements of subpart H for the proposed refinery are discussed in Section 4.10.1 herein.

For each wastewater stream that is both process wastewater as defined at § 61.341 of subpart FF of 40 CFR part 61 and a Group 1 wastewater stream as defined at § 63.641 of subpart CC, the proposed HEC petroleum refinery is required to comply with the provisions of subpart FF, pursuant to § 63.647(a) of subpart CC. The applicable provisions of subpart FF are described in Section 3.3.5 herein.

Gasoline loading racks at the proposed refinery will be subject to the loading rack provisions of subpart CC. The control requirements for these include provisions for vapor collection and processing systems and for vapor tightness of truck and railcar cargo tanks. The applicable provisions for vapor collection and processing systems are those set forth at § 63.422(b) of subpart R of 40 CFR part 63, pursuant to § 63.650(a) of subpart CC. The emission standard under subpart R and subpart CC is a VOC emission limit of 10 milligrams per liter of gasoline loaded. The applicable provisions for vapor tightness of truck and railcar cargo tanks are those set forth at § 60.502(e) of subpart XX of 40 CFR part 60, pursuant to § 63.646(a) of subpart CC and § 63.422(c) of subpart R of 40 CFR part 63. In addition to these emission standards, the gasoline loading racks are subject to periodic inspection, testing, monitoring, recordkeeping, and reporting provisions under subpart XX of 40 CFR part 60 and under subpart R of 40 CFR part 63.

There will be no process vents at the HEC refinery that are miscellaneous process vents as that term is defined at § 63.641 of subpart CC. The process vents at the refinery that are specifically excluded from the definition of miscellaneous process vent include equipment leaks; relief valve

discharges; vents from storage tanks; episodic releases associated with startup, shutdown, or malfunction; gaseous streams routed to the refinery fuel gas system; in situ sampling systems; one catalytic reforming unit catalyst regeneration vent; coke drum depressuring vents; sulfur recovery plant vents; wastewater collection system vents; hydrogen plant reformer/stripper vents; and the Oleflex Unit catalyst regenerator vent. The Oleflex Unit catalyst regenerator vent is excluded because its vent stream will contain less than 20 ppmv organic HAP.

The applicable provisions of subpart CC of 40 CFR part 63 are incorporated by reference at ARSD § 74:36:08:50.

3.3.14 40 CFR Part 63, Subpart UUU

Subpart UUU imposes HAP emission standards for the Sulfur Recovery Plant and the Platforming Unit catalyst regenerator. Subpart UUU also includes requirements for fluidized catalytic cracking unit catalyst regeneration vents, but the proposed refinery will not include a fluidized catalytic cracking unit.

The sulfur recovery plant at the proposed HEC refinery is subject to the control requirements under § 63.1568(a)(1) of subpart UUU. These control requirements, as well as the applicable testing, monitoring, recordkeeping, and reporting provisions for sulfur recovery units, are essentially identical to the requirements in subpart J of 40 CFR part 60.

The Platforming Unit catalyst regenerator at the proposed refinery is subject to the control requirements under subpart UUU. These requirements include an emission limit for total organic compounds, as a surrogate for organic HAP, under § 63.1566(a) and an emission limit for hydrogen chloride, as a surrogate for inorganic HAP, under § 63.1567(a). The applicable provisions of subpart UUU also include testing, monitoring, recordkeeping, and reporting provisions.

The applicable provisions of subpart UUU of 40 CFR part 63 are incorporated by reference at ARSD § 74:36:08:67.

3.3.15 40 CFR Part 63, Subpart EEEE

Subpart EEEE applies to loading of certain organic liquids into rail cars and tank trucks. The proposed HEC will include several facilities generally similar to those covered by this NESHAP regulation. However, all facilities for loading of gasoline products and distillate products are exempt from the provisions of subpart EEEE because the term “organic liquid” is defined at 40 CFR § 63.2406 to exclude gasoline, aviation gasoline, No. 1 distillate oil, No. 2 distillate oil, asphalt, and heavier distillate oils and fuel oils. Facilities for loading of LPG and sulfur are exempt because the term “organic liquid” is defined to exclude liquids that contain less than 5 percent organic HAP by weight. The HEC will therefore not include any affected sources under subpart EEEE.

The pertinent provisions of subpart EEEE of 40 CFR part 63 are incorporated by reference at ARSD § 74:36:08:71.

3.3.16 40 CFR Part 63, Subpart FFFF

Subpart FFFF applies to process vents, storage vessels, wastewater streams, and equipment leaks associated with certain "miscellaneous organic chemical manufacturing process units." None of the process units at the HEC fall within the definition of this term at 40 CFR § 63.2550(i). Notably, the methanol desorption and recovery process within the acid gas removal process in the IGCC power plant is not a miscellaneous organic chemical manufacturing process unit because it does not produce methanol as a product or an isolated intermediate. [8] The HEC will therefore not include any affected sources under subpart FFFF.

The pertinent provisions of subpart FFFF of 40 CFR part 63 are incorporated by reference at ARSD § 74:36:08:72.

3.3.17 40 CFR Part 63, Subpart YYYY

Subpart YYYY applies to stationary combustion turbines such as those at the HEC IGCC power plant. The turbines at the HEC power plant are gas-fired stationary combustion turbines and, pursuant to § 63.6095(d) of subpart YYYY, are not subject to any of the substantive requirements of this regulation pending further rulemaking by U.S. EPA.

The pertinent provisions of subpart YYYY of 40 CFR part 63 are incorporated by reference at ARSD § 74:36:08:39.

3.3.18 40 CFR Part 63, Subpart ZZZZ

Subpart ZZZZ applies to stationary, reciprocating, internal combustion engines. The Diesel engines in both the emergency generator and the emergency fire water pump at the HEC refinery are emergency stationary reciprocating internal combustion engines and are affected facilities under this rule. As emergency use engines, these engines are not subject to any of the substantive requirements under subpart ZZZZ.

The pertinent provisions of subpart ZZZZ of 40 CFR part 63 are incorporated by reference at ARSD § 74:36:08:40.

3.3.19 40 CFR Part 63, Subpart DDDDD

This regulation, which would apply to boilers and process heaters, was vacated by the D.C. Circuit Court of Appeals on June 8, 2007.

The pertinent provisions of subpart DDDDD of 40 CFR part 63 are incorporated by reference at ARSD § 74:36:08:41.

---

[8] RTP has submitted to U.S. EPA a request for applicability determination. This request was received by U.S. EPA on August 21, 2007. However, U.S. EPA has not responded within 30 days as provided by 40 CFR § 60.5(b).

3.4 South Dakota Administrative Rules

3.4.1 ARSD § 74:36:05

This rule includes permitting requirements for major sources, including several requirements that are applicable to the HEC.

3.4.1.1 ARSD § 74:36:05:02

This rule prohibits construction of the stationary source until the preconstruction permit has been issued. This permit application is intended to satisfy the requirements of this rule.

3.4.1.2 ARSD § 74:36:05:03.01

This rule requires that a major stationary source subject to PSD permitting requirements, such as the HEC, submit a complete application for a Part 70 operating permit within 12 months after commencing operation.

3.4.1.3 ARSD § 74:36:05:12

This rule sets out the required content of an air quality permit application. This permit application is intended to satisfy the requirements of this rule.

3.4.2 ARSD § 74:36:07

This rule incorporates by reference several of the federal New Source Performance Standards codified at 40 CFR part 60. Applicability of these federal regulations is discussed in detail in Section 3.2 herein.

3.4.3 ARSD § 74:36:08

This rule incorporates by reference several of the federal National Emission Standards for Hazardous Air Pollutants codified at 40 CFR parts 61 and 63. Applicability of these federal regulations is discussed in detail in Section 3.3 herein.

3.4.4 ARSD § 74:36:09

This rule establishes the South Dakota PSD Program, incorporating by reference all of the substantive requirements of 40 CFR § 52.21. This permit application satisfies those requirements, as discussed at Section 3.1.4 herein.

3.4.5 ARSD § 74:36:19

This rule establishes the South Dakota Mercury Budget Trading Program, implementing 40 CFR § 60.24(h) and incorporating by reference certain provisions of U.S. EPA's model rule at subpart HHHH of 40 CFR part 60. This rule does not apply to the HEC facilities, including the IGCC power plant, because none of the facilities will serve a generator that produces electricity for sale.

Chapter 4. Best Available Control Technology (BACT)

4.1 BACT Analysis Overview

4.1.1 Best Available Control Technology Definition

The PSD regulations define BACT at 40 CFR § 52.21(b)(12) as follows:

> "[BACT] means an emissions limitation (including a visible emission standard) based on the maximum degree of reduction for each pollutant subject to regulation under Act which would be emitted from any proposed major stationary source or major modification which the Administrator, on a case-by-case basis, taking into account energy, environmental, and economic impacts and other costs, determines is achievable for such source or modification through application of production processes or available methods, systems, and techniques, including fuel cleaning or treatment or innovative fuel combustion techniques for control of such pollutant. In no event shall application of best available control technology result in emissions of any pollutant which would exceed the emissions allowed by any applicable standard under 40 CFR parts 60 and 61. If the Administrator determines that technological or economic limitations on the application of measurement methodology to a particular emissions unit would make the imposition of an emissions standard infeasible, a design, equipment, work practice, operational standard, or combination thereof, may be prescribed instead to satisfy the requirement for the application of best available control technology. Such standard shall, to the degree possible, set forth the emissions reduction achievable by implementation of such design, equipment, work practice or operation, and shall provide for compliance by means which achieve equivalent results."

4.1.2 Methodology for BACT Analyses

The PSD regulations do not prescribe a procedure for conducting BACT analyses. Instead, the U.S. EPA has consistently interpreted the BACT requirement as containing two core criteria: First, the BACT analysis must include consideration of the most stringent available technologies, *i.e.*, those that provide the "maximum degree of emissions reduction." Second, any decision to require as BACT a control alternative that is less effective than the most stringent available must be justified by an analysis of objective indicators showing that energy, environmental, and economic impacts render the most stringent alternative unreasonable or otherwise not achievable.

U.S. EPA has developed what it terms the "top-down" approach for conducting BACT analyses and has indicated that this approach will generally yield a BACT determination satisfying the two core criteria. Under the "top-down" approach, progressively less stringent control technologies are analyzed until a level of control considered BACT is reached, based on the

environmental, energy, and economic impacts. The top-down approach was utilized in this BACT analysis.

The five basic steps of a top-down BACT analysis are listed below:

1. Identify all available control technologies with practical potential for application to the specific emission unit for the regulated pollutant under evaluation;
2. Eliminate all technically infeasible control technologies;
3. Rank remaining control technologies by effectiveness and tabulate a control hierarchy;
4. Evaluate most effective controls and document results; and
5. Select BACT, which will be the most effective practical option not rejected, based on economic, environmental, and/or energy impacts.

4.1.3 BACT Baseline

The statutory definition of BACT states:

> "In no event shall application of 'best available control technology' result in emissions of any pollutants which will exceed the emissions allowed by any applicable standard established pursuant to section 111 or 112 of [the Clean Air Act]."

As described in Sections 3.2 and 3.3 herein, certain of the emission units at the proposed Hyperion Energy Center will be subject to applicable standards established pursuant to Sections 111 (NSPS) and 112 (NESHAP) of the Clean Air Act. For these units, and for the pollutants to which these standards apply, the applicable NSPS and NESHAP emission limitations establish the maximum allowable emission limitations or control technology "baseline" for the BACT analysis. The performance and costs of more stringent control technologies evaluated for possible application to those emissions units have been compared to these baselines.

4.1.4 BACT Technical Feasibility Criteria

In the second step of the BACT analysis, control technologies are evaluated for technical feasibility. Technical infeasibility will be demonstrated through clear physical, chemical, or other engineering principles that demonstrate that technical difficulties preclude the successful use of the control option. In addition, the technology must be commercially available for it to be considered as a candidate BACT technology. U.S. EPA's draft New Source Review Manual, summarizes the technical feasibility criteria as follows:

> Technologies which have not yet been applied to (or permitted for) full scale operations need not be considered available; an applicant should be able to purchase or construct a process or control device that has already been demonstrated in practice.

In general, a technically feasible control technology is one that has been demonstrated to function efficiently on an emissions unit that is identical or similar to the emissions unit under review. For the purposes of assessing technical feasibility, the determination of whether an emissions unit should be considered to be identical or similar is based upon the physical and chemical characteristics of the gas stream to be controlled. A control method applicable to one emissions unit may not be technically feasible for an apparently similar source depending on differences in physical and chemical gas stream characteristics.

4.2 Petroleum Refinery Process Heaters

4.2.1 Nitrogen Oxides Emissions

Nitrogen oxides ("NO_X") are formed during combustion by two major mechanisms: Thermal NO_X and Fuel NO_X. Thermal NO_X results from the high temperature oxidation of molecular nitrogen in combustion air. As its name implies, thermal NO_X formation is primarily dependent on combustion temperature. Fuel NO_X results from the direct oxidation of organic nitrogen compounds in the fuel. For the refinery fuel gas to be burned in the process heaters at the HEC refinery, fuel nitrogen levels will be negligible, so thermal NO_X is the primary formation mechanism of concern.

4.2.1.1 BACT Baseline.

Based on the proposed standards under subpart Ja of 40 CFR part 60, as discussed in Section 3.2.6 herein, the highest allowable emission limit which would meet BACT requirements for the process heaters at the HEC refinery is approximately 0.08 lb/MMBtu, based on a 24-hour rolling average.

4.2.1.2 Step 1 – Identify NO_X Control Alternatives

Identified control technologies and techniques for NO_X emissions include

- Low-NO_X burners
- Flue gas recirculation
- EMx™
- Selective catalytic reduction ("SCR")
- Selective non-catalytic reduction ("SNCR")

4.2.1.3 Step 2 – Eliminate Technically Infeasible Control Options

4.2.1.3.1 EMx™

The EMx™ system (formerly $SCONO_X$™) is an add-on control device that simultaneously oxidizes CO to CO_2, VOCs to CO_2 and water, NO to NO_2, and then adsorbs the NO_2 onto the surface of a catalyst coated with potassium carbonate. The overall chemical reaction between NO_2 and the potassium carbonate catalyst is as follows:

$$2\ NO_2 + K_2CO_3 \rightarrow CO_2 + KNO_2 + KNO_3$$

The system does not require injection of a reactant, such as ammonia as required by SCR and SNCR, and operates most effectively at temperatures ranging from 300°F to 700°F. Steam is used periodically to regenerate the catalyst bed and is an integral part of the process.

The catalyst has a finite capacity to react with NO_2. In order to maintain the required NO_X removal rate, the catalyst must be regenerated periodically. Regeneration is accomplished by

passing a reducing gas containing a dilute concentration of hydrogen across the surface of the catalyst in the absence of oxygen. Hydrogen in the regeneration gas reacts with the nitrites and nitrates to form water and molecular nitrogen. Carbon dioxide in the regeneration gas reacts with the potassium nitrite and nitrates to form potassium carbonate, which is the original chemical in the catalyst coating. The overall chemical reaction during regeneration is as follows:

$$KNO_2 + KNO_3 + 4\ H_2 + CO_2 \rightarrow K_2CO_3 + 4\ H_2O + N_2$$

The regeneration gas is produced in a gas generator using a two-stage process to produce molecular hydrogen and carbon dioxide. In the first stage, natural gas and air are reacted across a partial oxidation catalyst to form carbon monoxide and hydrogen. Steam is added to the mixture and then passed across a low temperature shift catalyst, forming carbon dioxide and more hydrogen. The regeneration gas mixture is diluted to less than 4 percent hydrogen using steam. In order to accomplish the periodic regeneration, the EMx™ system is constructed in numerous modules in parallel so that one module can be closed off from the exhaust stream using inlet and outlet dampers and regenerated while the remaining modules are open for treatment of the exhaust gas stream.

There are currently several EMx™ / SCONO$_X$™ units in commercial installations worldwide, although all are on natural gas-fired combustion turbines of 43 MW or less. The EMx™ system is not considered technically feasible for process heaters firing sulfur-bearing refinery fuel gas. This technology has not been demonstrated to function efficiently on any combustion sources burning fuels other than natural gas, or on any type of combustion source other than a combustion turbine, regardless of fuel. Thus, there are significant technical differences between the proposed refinery's process heaters and those few sources where this technology has been demonstrated in practice. These significant technical differences preclude a determination that the EMx™ system has been demonstrated to function efficiently on sources that are identical or similar to the proposed refinery's process heaters.

4.2.1.3.2 Flue Gas Recirculation

Flue gas recirculation has not been demonstrated to function efficiently on process heaters that are subject to highly variable loads and that burn fuels with variable heat value. Thus, there are significant technical differences between the proposed refinery's process heaters and those combustion sources where flue gas recirculation has been demonstrated in practice. These significant technical differences preclude a determination that flue gas recirculation has been demonstrated to function efficiently on sources that are identical or similar to the proposed refinery's process heaters.

4.2.1.4 Step 3 - Characterize Control Effectiveness of Technically Feasible Control Options

The second-ranked control option for each process heater involves the use of low-NO$_X$ burners. The NO$_X$ emission level achievable with this control option varies somewhat for individual heaters, but is generally between 0.024 lb/MMBtu heat input (HHV) and 0.048 lb/MMBtu heat input (HHV), based on a three-hour average. This control option is proposed as BACT for ten process heaters having a total heat input capacity of 661 MMBtu/hr (HHV).

The highest-ranked control strategy for each process heater involves the use of low-NO_X burners and SCR in combination. The NO_X emission level achievable with this control option is 0.006 lb/MMBtu heat input (HHV), based on a three-hour average. This control option has been proposed by the Permittee for twenty process heaters having a total heat input capacity of 7,944 MMBtu/hr (HHV). More than 92 percent of the process heater capacity is proposed to be equipped with both low-NO_X burners and SCR.

4.2.1.5 Step 4 - Evaluate More Effective Control Options

In the case of each process heater, the second-ranked control option (*i.e.*, low-NO_X burners without SCR) will not cause any adverse energy, environmental, or economic impacts. The highest-ranked control option (*i.e.*, with the addition of SCR), when considered in comparison with the second-ranked control option, will cause adverse energy and economic impacts and will yield both beneficial and adverse environmental impacts. The adverse energy impact is due to the electrical requirements of the SCR system operation and to the reduction in energy efficiency attributable to the pressure drop across the SCR catalyst grid. To the extent that the decreased energy efficiency results in an economic penalty, that cost is considered in the evaluation of adverse economic impacts, discussed below. With that exception, the adverse energy impacts are relatively minor and are not a significant factor in the BACT decision.

The adverse environmental impacts attributable to the addition of the SCR system include ammonia emissions and the handling and disposal of a spent catalyst as a solid waste stream. Extensive industry experience with SCR systems indicates that the removal and disposal of spent SCR catalyst can be conducted safely, with insignificant risk to the environment. To the extent that the safe removal and disposal of spent catalyst results in an economic penalty, that cost is considered in the evaluation of adverse economic impacts, discussed below. Otherwise, the environmental impacts of spent catalyst removal and disposal are not a significant factor in the BACT decision.

Ammonia "slip," or ammonia that is injected in the SCR system and exits the unit without participating in the chemical reduction of NO_X emissions, leads directly to emissions of ammonia and can lead indirectly to the formation of visible plumes and secondary particulate matter. These problems are less severe when the SCR catalyst is new and activity is highest, because the ammonia injection rate can be set to near-stoichiometric levels. As the catalyst ages, its activity decreases, and a higher ammonia reagent injection rate is required to maintain the rate of the NO_X reduction reaction necessary for continuous compliance with NO_X emission limits.

The final consideration in the evaluation of alternative NO_X control options is the adverse economic impact associated with the application of SCR. For twenty of the thirty process heaters, the most effective identified control option is proposed as BACT, and no discussion of this economic impact is warranted. These are generally the larger heaters, where the use of combustion air preheat will result in higher NO_X emission levels from the furnace equipped with low-NO_X burners and where economies of scale make SCR more cost effective.

For the remaining ten process heaters, BACT emission limits based on the use of low-NO_X burners without SCR are proposed. This is based, in part, on the unreasonable, adverse economic impacts that would be associated with SCR installation. Specifically, the cost analyses

developed by RTP show that the incremental cost effectiveness of adding SCR systems to these ten process heaters is more than $30,000 per ton of NO_X emission reduction. (Summary cost data are provided in Appendix D to this permit application.) Considering these adverse economic impacts as well as the adverse environmental impacts and the relatively insignificant air quality benefits that would result, RTP concludes that requiring SCR for these process heaters cannot be justified and does not represent BACT.

4.2.1.6 Step 5 - Establish BACT

For twenty process heaters, the BACT control strategy is the use of low-NO_X burners in combination with SCR. These heaters are as follows:

Table 4.2-1. Process Heaters with Low-NO_X Burners and SCR as BACT

Process Heater	Heat Input Capacity
No. 1 Atmospheric Crude Charge Heater	530.2 MMBtu/hr (HHV)
No. 2 Atmospheric Crude Charge Heater	530.2 MMBtu/hr (HHV)
No. 1 Vacuum Charge Heater	214.7 MMBtu/hr (HHV)
No. 2 Vacuum Charge Heater	214.7 MMBtu/hr (HHV)
Napntha Hydrotreater Charge Heater	199.6 MMBtu/hr (HHV)
Naphtha Hydrotreater Stripper Reboiler Heater	168.8 MMBtu/hr (HHV)
Naphtha Splitter Reboiler Heater	246.8 MMBtu/hr (HHV)
Distillate Hydrotreater Feed Heater	140.6 MMBtu/hr (HHV)
Delayed Coker Heater No. 1A	242.5 MMBtu/hr (HHV)
Delayed Coker Heater No. 1B	242.5 MMBtu/hr (HHV)
Delayed Coker Heater No. 2A	242.5 MMBtu/hr (HHV)
Delayed Coker Heater No. 2B	242.5 MMBtu/hr (HHV)
No. 1 Platformer Charge & 1st Interheater	824.5 MMBtu/hr (HHV)
No. 2 Platformer Charge & 1st Interheater	824.5 MMBtu/hr (HHV)
No. 1 Platformer 2nd & 3rd Interheaters	492.9 MMBtu/hr (HHV)
No. 2 Platformer 2nd & 3rd Interheaters	492.9 MMBtu/hr (HHV)
Reformate Splitter Reboiler	138.0 MMBtu/hr (HHV)
No. 1 Hydrocracker Fractionator Feed Heater	675.5 MMBtu/hr (HHV)
No. 2 Hydrocracker Fractionator Feed Heater	675.5 MMBtu/hr (HHV)
Oleflex Heater	604.4 MMBtu/hr (HHV)

For each of these heaters, the proposed NO_X emission limits are as follows:

- 0.006 lb/MMBtu heat input (HHV), based on an hourly rolling three-hour average, excluding periods of startup, shutdown, and malfunction; and
- 0.006 lb/MMBtu heat input (HHV), based on a daily rolling 365-day average, with no exclusion for periods of startup, shutdown, or malfunction.

These proposed emission limits are more stringent than any limits imposed on or achieved by any refinery fuel gas-fired process heater.

For ten process heaters, the BACT control strategy is the use of low-NO_X burners. These heaters are as follows:

Table 4.2-2. Process Heaters with Low-NO_X Burners as BACT

Process Heater	Heat Input Capacity
No. 1 Hydrocracker Heater 1A	66.9 MMBtu/hr (HHV)
No. 2 Hydrocracker Heater 1A	66.9 MMBtu/hr (HHV)
No. 1 Hydrocracker Heater 1B	66.9 MMBtu/hr (HHV)
No. 2 Hydrocracker Heater 1B	66.9 MMBtu/hr (HHV)
No. 1 Hydrocracker Heater 1C	66.9 MMBtu/hr (HHV)
No. 2 Hydrocracker Heater 1C	66.9 MMBtu/hr (HHV)
No. 1 Hydrocracker Heater 2A	64.9 MMBtu/hr (HHV)
No. 2 Hydrocracker Heater 2A	64.9 MMBtu/hr (HHV)
No. 1 Hydrocracker Heater 2B	64.9 MMBtu/hr (HHV)
No. 2 Hydrocracker Heater 2B	64.9 MMBtu/hr (HHV)

For each of these heaters, the proposed NO_X emission limits are as follows:

- 0.025 lb/MMBtu heat input (HHV), based on an hourly rolling three-hour average, excluding periods of startup, shutdown, and malfunction; and
- 0.025 lb/MMBtu heat input (HHV), based on a daily rolling 365-day average, with no exclusion for periods of startup, shutdown, or malfunction.

Each of these limits is more stringent than any limits imposed on or achieved by any comparable refinery fuel gas-fired process heater.

With the NO_X emission limits proposed as BACT, the total allowable NO_X emissions from the refinery fuel gas-fired process heaters at the HEC petroleum refinery will be only 0.0075 lb/MMBtu (HHV) on a heat input weighted average basis.

4.2.2 Sulfur Dioxide and Sulfuric Acid Mist Emissions

Sulfur oxides ("SO_X") will be emitted from the HEC petroleum refinery process heaters due to the sulfur content of refinery fuel gas.

4.2.2.1 BACT Baseline.

Based on the proposed standards under subpart Ja of 40 CFR part 60, as discussed in Section 3.2.6 herein, the highest allowable emission limit which would meet BACT requirements for the process heaters at the HEC refinery is a fuel sulfur content of 160 ppmv, based on a three-hour rolling average, and 60 ppmv, based on 365-day rolling average.

4.2.2.2 Step 1 – Identify SO_X Control Alternatives

Emissions of sulfur oxides can be controlled either by limiting the sulfur content of the fuel or by scrubbing the exhaust gas. Potentially available control technologies include:

- Fuel gas cleanup by chemical absorption
- Fuel gas cleanup by physical absorption
- Flue gas desulfurization

4.2.2.2.1 Fuel Gas Cleanup by Chemical Absorption

Chemical absorption is the fuel gas cleanup technique used by all petroleum refineries of which RTP is aware. This technique scrubs the fuel gas with a regenerable solvent such as methyl diethanolamine (MDEA) that bonds chemically with the H_2S.

4.2.2.2.2 Fuel Gas Cleanup by Physical Absorption

Physical absorption involves the use of a physical sorbent, such as refrigerated methanol in the Rectisol® wash process or dimethyl ethers of polyethylene glycol in the Selexol® process, to scrub sulfur compounds from syngas. The Rectisol® wash process is proposed for syngas cleanup in the HEC IGCC power plant and is described in detail in Section 2.3.6.1 herein. The Selexol® process is generally similar, including physical absorption of reduced sulfur compounds in a chilled solvent followed by a continuous solvent regeneration process.

4.2.2.2.3 Flue Gas Desulfurization

Flue gas desulfurization processes operate by contacting the exhaust gas downstream of the combustion zone with an alkaline slurry or solution that absorbs and subsequently reacts with the sulfur oxides. These technologies may be wet, semi-dry, or dry based on the state of the reagent as it is injected or pumped into the absorber vessel. The most common types of systems use non-regenerable, calcium-based reagents or regenerable, sodium-based reagents.

4.2.2.3 Step 2 – Eliminate Technically Infeasible Control Options

All of the identified control technologies are technically feasible for the HEC petroleum refinery process heaters.

4.2.2.4 Step 3 – Characterize Control Effectiveness of Technically Feasible Control Options

The Rectisol® wash process has been demonstrated to achieve less than 1 ppmv total sulfur level in other types of gas streams. Although RTP is aware of no application of the Rectisol® wash process for cleanup of refinery fuel gas, this process is presumed for this analysis to be capable of achieving a similar level of control for refinery fuel gas. This is the most effective control option.

The Selexol® process is the second most effective control option and has been demonstrated to achieve 10 ppmv total sulfur level in other gas streams. Although RTP is aware of no application of the Selexol® process for cleanup of refinery fuel gas, this process is presumed for this analysis to be capable of achieving a similar level of control for refinery fuel gas.

Refinery fuel gas cleanup by chemical absorption using MDEA is the third most effective control option and has been demonstrated to achieve less than 35 ppmv total sulfur level in refinery fuel gas. As noted above, this technology is used by nearly all petroleum refineries for fuel gas cleanup and is a proven technology in this application.

Flue gas desulfurization is the fourth most effective control option. This control technique can achieve high removal efficiencies for sulfur oxides emissions in some applications, but the achievable efficiency is much less on the dilute exhaust of refinery fuel gas fired process heaters.

4.2.2.5 Step 4 – Evaluate More Effective Control Options

The two highest-ranked control options, both based on the use of physical absorption for fuel gas cleanup, would cause significant adverse energy and economic impacts that would outweigh the beneficial environmental impacts. The adverse energy impacts are due to the electrical requirements of the physical absorption processes. The economic impacts are due to the greatly increased capital and operating costs. As shown in Appendix D to this permit application, the cost effectiveness of fuel gas cleanup by physical absorption is more than $35,000 per ton of SO_2 removal for a Selexol® process and nearly $70,000 per ton of SO_2 removal for the Rectisol® wash process.

4.2.2.6 Step 5 – Establish BACT

The proposed emission limits for sulfur oxides from the process heaters at the HEC petroleum refinery are as follows:

- Maximum refinery fuel gas sulfur level of 35 ppmv, based on an hourly rolling 24-hour average, excluding periods of startup, shutdown, and malfunction; and
- Maximum refinery fuel gas sulfur level of 35 ppmv, based on a daily rolling 365-day average, with no exclusion for periods of startup, shutdown, or malfunction.

These proposed emission limits are more stringent than any limits achieved by any petroleum refinery of which RTP is aware and are equal to the most stringent limits imposed in the permit for any petroleum refinery.

4.2.3 Carbon Monoxide Emissions

Carbon monoxide will be emitted from the HEC petroleum refinery process heaters due to incomplete combustion of hydrocarbons in fuel gas.

4.2.3.1 BACT Baseline.

There are no applicable NSPS or NESHAP rules that would establish a baseline CO emission rate for the process heaters at the HEC petroleum refinery. As described in Section 3.3.19 herein, U.S. EPA has promulgated a NESHAP regulation that would apply to these process heaters, and this NESHAP includes a CO emission limit, but the rule has been vacated and is no longer in effect or applicable.

4.2.3.2 Step 1 – Identify CO Control Alternatives

Potentially available control technologies for CO emissions from process heaters fired with refinery fuel gas include good combustion practices and the use of oxidation catalyst.

4.2.3.2.1 Good Combustion Practices

Good combustion practices for process heaters fired with refinery fuel gas include the following:

- Proper fuel gas supply system design and operation in order to minimize fluctuations in fuel gas quality;
- Proper burner and furnace design;

- Good burner maintenance and operation; and
- Good Air/Fuel Mixing.

As with other types of fossil fuel-fired systems, combustion control is the most effective means for reducing CO emissions. Combustion efficiency is related to the three "T's" of combustion: Time, Temperature, and Turbulence. These components of combustion efficiency are designed into the process heater to maximize fuel efficiency and reduce operating costs. Therefore, combustion control is accomplished primarily through process heater/burner design and operation.

Changes in excess air affect the availability of oxygen and combustion efficiency. Very low or very high excess air levels will result in high CO formation and can also affect NO_X formation. Increased excess air levels will reduce the emissions of CO up to the point that so much excess air is introduced that the overall combustion temperatures begin to drop significantly. If combustion temperatures drop significantly, then process heater efficiency and process fluid temperatures are also negatively affected. Low excess air levels lower combustion temperatures and do not allow sufficient oxygen to minimize the formation of CO but does reduce the formation of thermal NO_X. Process heaters operate within a narrow range of excess air levels due to the interrelationships between oxygen levels, combustion efficiency, and the formation of CO and NO_X.

4.2.3.2.2 Oxidation Catalyst

Oxidation catalyst is a well-known control technology for CO and VOC emissions and has been widely applied on natural gas-fired combined cycle gas turbines. The oxidation of CO to CO_2 utilizes excess air present in the combustion exhaust, and the activation energy required for the reaction to proceed is lowered in the presence of a catalyst. Products of combustion are introduced into a catalytic bed, with the optimum temperature range for these systems being approximately 850 °F to 1,100 °F. No chemical reagent addition is required.

4.2.3.3 Step 2 – Eliminate Technically Infeasible Control Options

Oxidation catalyst is not a technically feasible option for control of CO emissions from process heaters at the HEC petroleum refinery.

The typical oxidation catalyst for CO is rhodium or platinum (noble metal) catalyst on an alumina support material. This catalyst is installed in an enlarged duct or reactor with flue gas inlet and outlet distribution plates. Acceptable catalyst operating temperatures range from 400 to 1250 °F, with the optimal range being 850 to 1,100 °F. Below approximately 600 °F, a greater catalyst volume would be required to achieve the same reduction. To achieve this temperature range in process heaters fired with refinery fuel gas, the catalyst would need to be installed in the heater upstream of any waste heat recovery or air preheat equipment. Typical oxidation catalyst control efficiencies for CO are 50 to 90 percent.

However, installation of oxidation catalyst in flue gas containing more than trace levels of SO_2 will result in poisoning and deactivation of the catalyst by sulfur-containing compounds, as well as increasing the conversion of SO_2 to SO_3. The increased conversion of SO_2 to SO_3 will increase condensible particulate matter emissions and increase flue gas system corrosion rates.

In addition, for heaters equipped with SCR for NO_X control, the presence of SO_3 in the exhaust gas will result in plugging or deactivation of the SCR catalyst. For these reasons, catalytic oxidation of CO is not considered technically feasible for the refinery fuel gas fired process heaters, which is one of the reasons why this technology has not been applied to petroleum refinery process heaters.

4.2.3.4 Steps 3-5

As noted above, the only technically feasible control option identified for refinery fuel gas fired process heaters at the HEC petroleum refinery is adherence to good combustion practices. This control option will not result in any adverse energy, economic, or environmental impacts.

The proposed BACT emission limits for CO emissions from each of the process heaters at the HEC petroleum refinery are as follows:

- Maximum CO emission rate of 0.010 lb per MMBtu, based on an hourly rolling 24-hour average, excluding periods of startup, shutdown, and malfunction; and
- Maximum CO emission rate of 0.010 lb per MMBtu, based on a daily rolling 365-day average, with no exclusion for periods of startup, shutdown, or malfunction.

These proposed emission limits are more stringent than any limits imposed on or achieved by any petroleum refinery of which RTP is aware.

4.2.4 Volatile Organic Compounds Emissions

Volatile organic compounds will be emitted from the HEC petroleum refinery process heaters due to incomplete combustion of hydrocarbons in fuel gas.

4.2.4.1 BACT Baseline.

There are no applicable NSPS or NESHAP rules that would establish a baseline VOC emission rate for the process heaters at the HEC petroleum refinery.

4.2.4.2 Steps 1-2

The potentially available control technologies for VOC emissions from process heaters fired with refinery fuel gas are the same as those discussed in Section 4.2.3, with respect to CO emissions. The only technically feasible control option is adherence to good combustion practices.

4.2.4.3 Steps 3-5

The only technically feasible control option is adherence to good combustion practices. This control option will not result in any adverse energy, economic, or environmental impacts. The proposed BACT emission limits for VOC emissions from each of the process heaters at the HEC petroleum refinery are the CO emission limits described in Section 4.2.3.4 herein. RTP is proposing that the CO emission limits serve as a surrogate for VOC emissions for the following reasons:

- The control technologies and techniques for both pollutants are the same. Effective control of CO emissions through adherence to good combustion practices will ensure effective control of VOC emissions.
- Compliance with the CO emission limits will be achieved through continuous emissions monitoring, which will provide for adequate assurance of continuous compliance with applicable emission limits. Compliance with separate VOC emission limits would be demonstrated through infrequent "snapshot" performance testing that would yield no environmental benefit and would provide negligible benefit in terms of compliance assurance.

These proposed emission limits are more stringent than any limits imposed on or achieved by any petroleum refinery of which RTP is aware.

4.2.5 Particulate Matter Emissions

4.2.5.1 Steps 1-4

The only control strategies identified for particulate matter emissions from refinery fuel gas-fired process heaters are work practice requirements: Adherence to good combustion practices for all heaters, and minimizing ammonia slip at heaters equipped with SCR for control of NO_X emissions. These control strategies are technically feasible and will not cause any adverse energy, environmental, or economic impacts.

4.2.5.2 Step 5 – Establish BACT

A PM-10 emission limit of 0.0075 lb/MMBtu heat input (HHV) is representative of good combustion practices with refinery fuel gas-fired process heaters and is proposed as BACT for PM-10 emissions. Because the control technology bases for the PM and PM-10 BACT determinations are the same, this limit is also proposed to represent BACT for PM emissions, with PM-10 as a surrogate for PM. RTP is not aware of any refinery fuel gas-fired process heaters that are subject to more stringent PM-10 emission limits.

4.3 Petroleum Refinery Fuel Gas Producing Units

As described in Section 2.2.15 herein, the HEC refinery will include five elevated flares connected to a pressure relief system that would route non-routine hydrocarbon releases to the flares for safe disposal. An important design feature of the HEC refinery is that the pressure relief and flare systems will include robust "flare gas recovery" systems with significant compressor capacity. The recovery systems will preclude flaring of continuously or intermittently generated hydrocarbon streams. In contrast, most existing petroleum refineries are designed and operated such that continuously and intermittently generated hydrocarbon streams are routinely combusted in flares. The U.S. EPA and some state and local air pollution control agencies have identified this practice as a source of concern and have required steps to minimize the resulting emissions of SO_2 and VOC.

Consistent with the terminology adopted by U.S. EPA in the proposed NSPS rule for petroleum refineries, subpart Ja of 40 CFR part 60, the term "fuel gas producing unit" is used in this BACT analysis to refer to each refinery process unit that produces fuel gas as a routine part of its normal operations, and the term "fuel gas" is used broadly to refer to any gas stream that is generated at the refinery and combusted, except for vapors captured at the wastewater treatment plant. This portion of the BACT analysis pertains only to the flaring of fuel gas. Other combustion of fuel gas, such as in refinery process heaters, is covered by Sections 4.2 and 4.6 herein.

4.3.1 VOC and H_2S Emissions

4.3.1.1 BACT Baseline.

For VOC emissions, there are several potentially applicable rules that would require any continuously or periodically generated vent gas streams to be combusted in a flare, including subpart NNN of 40 CFR part 60 and subpart CC of 40 CFR part 63. As discussed below, the design of the pressure relief and flare systems at the HEC refinery will preclude flaring of continuously or intermittently generated hydrocarbon streams. Nonetheless, the flare specifications at 40 CFR § 60.18 are the least stringent permit terms that would meet BACT requirements for the fuel gas producing units at the HEC refinery.

There are no applicable NSPS or NESHAP rules that would establish a baseline H_2S emission rate for the fuel gas producing units at the HEC petroleum refinery.

4.3.1.2 Steps 1-4

The identified control options for minimizing emissions from fuel gas producing units are work practices and equipment design elements that will minimize use of the flares and will minimize emissions from the flares during flaring events:

- Minimizing the combustion of fuel gas in flares by using flare gas recovery systems and by modifying startup and shutdown procedures;
- Designing flares to meet limitations on maximum exit velocity; and
- Designing flares to meet minimum net heating value requirements for fuel gas combusted in the flares.

Each of these control options is technically feasible and is inherent in the design of the proposed HEC petroleum refinery.

4.3.1.3 Step 5 – Establish BACT

The proposed BACT emission limits for VOC and H_2S emissions from the fuel gas producing units at the HEC refinery are work practices and equipment design standards. These emission limits are as follows:

- The refinery shall include a flare gas recovery system. The system shall be designed to recover all routine vent gases and route these gases to a process or to the fuel gas system. Routine vent gases include all gas streams directed to a flare or flare header, including process gas purges and pressure relief valve leakage, but not including gas streams vented

due to emergency malfunctions, or the startup, shutdown, or malfunction of a process unit.

- The refinery shall minimize flaring resulting from startups, shutdowns, and emergency malfunctions by operating at all times in accordance with an approved flare minimization plan. The plan shall include the following elements:
    - Procedures for operating and maintaining the flares and flare gas recovery systems during periods of startup, shutdown, and malfunction.
    - A program of corrective action for malfunctioning fuel gas producing units, flares, flare gas recovery systems, and associated monitoring equipment.
    - Procedures to minimize discharges either directly to the atmosphere or to the flare gas system during the planned and unplanned startup or shutdown of process unit and air pollution control equipment.
    - Procedures for conducting root cause analyses.
- The refinery shall conduct a root cause analysis within 45 days after any flaring event that exceeds 5,000 standard cubic feet of vent gas. The analysis shall address the following elements:
    - The date and time that the flaring event started and ended.
    - The total quantity of gas flared during each event.
    - An estimate of the quantity of SO_2 and VOC that was emitted and the calculations used to determine the quantities.
    - The steps taken to limit the duration of the flaring event or the quantity of emissions associated with the event.
    - A detailed analysis that sets forth the root cause and all significant contributing causes of the flaring event to the extent determinable.
    - An analysis of the measures, if any, that are available to reduce the likelihood of a recurrence of a flaring event resulting from the same root cause or significant contributing causes in the future.
    - A demonstration that the actions taken during the flaring event are consistent with the procedures specified in the flare minimization plan.
- In response to any flaring event, the refinery shall implement, as expeditiously as practicable, such interim and/or long-term corrective actions as are consistent with good engineering practice to minimize the likelihood of a recurrence of the root cause and all significant contributing causes of that flaring event.
- The flares shall be designed to meet limitations on maximum exit velocity, as set forth in the NSPS general provisions at 40 CFR § 60.18.
- The flares shall be designed to meet minimum net heating value requirements for fuel gas combusted in the flares, as set forth at 40 CFR § 60.18.

Establishment of equipment design and work practice requirements as BACT is appropriate in this instance because it is infeasible to apply a measurement methodology for demonstration of compliance with numeric limits on emissions rates. The configuration of elevated flare systems renders both manual stack testing and continuous emissions monitoring systems technically infeasible.

RTP is not aware of any more stringent requirements for fuel gas producing units at any petroleum refinery.

4.3.2 SO_2, CO, NO_X, and Particulate Matter Emissions

The fuel gas producing units at the HEC petroleum refinery will not emit SO_2, CO, NO_X, PM, or PM-10. However, the flares that will be used to safely dispose of non-routine hydrocarbon releases and to meet BACT requirements for emissions of VOC and H_2S from these fuel gas producing units will be sources of SO_2, CO, NO_X, PM, and PM-10 emissions.

4.3.2.1 BACT Baseline.

Based on the proposed standards under subpart Ja of 40 CFR part 60, the least stringent permit terms that would meet BACT requirements for SO_2 emissions from flares used to control VOC and H_2S emissions from the fuel gas producing units at the HEC refinery are the following work practice requirements:

- A prohibition on routine releases of fuel gas to a flare from any fuel gas producing unit. This prohibition would not apply to the combustion in a flare of process upset gases or fuel that that is released to the flare as a result of relief valve leakage or other emergency malfunctions;
- A requirement for developing a written startup, shutdown, and malfunction plan that describes, in detail, procedures for operating and maintaining each fuel gas producing unit during periods of startup, shutdown, and malfunction; and
- A program of corrective action for malfunctioning process, air pollution control, and monitoring equipment associated with the above requirements.

There are no applicable NSPS or NESHAP rules that would establish a baseline emission rate for CO, NO_X, PM, or PM-10 emissions from the flares at the HEC petroleum refinery.

4.3.2.2 Step 1 – Identify All Control Options

The identified control options for reducing emissions from the flares include all of the following:

- All of the control options identified in Section 4.2, for emissions from process heaters firing refinery fuel gas;
- All of the work practices and equipment design specifications identified in Section 4.3.1;
- The refinery could be designed and operated without flares, with vent gases released directly to atmosphere.

4.3.2.3 Step 2 – Eliminate Technically Infeasible Control Options

Operation of the refinery without flares for safe disposal of nonroutine hydrocarbon releases is considered technically infeasible because it would allow uncombusted VOC and H_2S to be emitted to the atmosphere. The flares are necessary to ensure safe operation of the refinery.

Options for fuel gas cleanup identified in Section 4.2.2.1, including both chemical absorption and physical absorption, are technically feasible. All of the remaining control options identified in Section 4.2, for emissions from process heaters firing refinery fuel gas, are technically infeasible for application to the refinery flares. The inherent design and operation of emergency

flares, with widely varying operational levels involving an open flame above a 350-foot stack, do not allow for the use of low-NO_X burners or any add-on air pollution control equipment.

4.3.2.4 Steps 3-5

The most effective control options for SO_2, CO, NO_X, PM, and PM-10 emissions from the flares at the HEC petroleum refinery are the work practices and equipment design elements identified in Section 4.3.1.2. Each of these control options is technically feasible and is inherent in the design of the proposed HEC petroleum refinery. The proposed BACT emission limits for these pollutants are those listed in Section 4.3.1.3.

Establishment of equipment design and work practice requirements as BACT is appropriate in this instance because it is infeasible to apply a measurement methodology for demonstration of compliance with numeric limits on emissions rates. The configuration of elevated flare systems renders both manual stack testing and continuous emissions monitoring systems technically infeasible.

RTP is not aware of any more stringent requirements for fuel gas producing units at any petroleum refinery.

4.4 Catalyst Regeneration Vents

As described in Sections 2.2.5 and 2.2.8 herein, respectively, the Naptha Reforming Units and the Butane Conversion Complex will include a total of three catalyst regenerators. These catalyst regenerators will emit small quantities of NO_X, SO_2, CO, and particulate matter.

4.4.1 Nitrogen Oxides Emissions

4.4.1.1 BACT Baseline

There are no applicable NSPS or NESHAP rules that would establish a BACT baseline for NO_X emissions from the catalyst regeneration processes at the HEC petroleum refinery.

Licensors of the proprietary CCR Regenerator catalyst regeneration process used in the Naphtha Reforming Units and Oleflex regenerator process used in the Butane Conversion Complex have indicated to RTP that the concentration of NO_X in the catalyst regenerator exhaust gases will be approximately 10 ppmv. Based on design maximum exhaust gas flow rates, the NO_X emission rates from the catalyst regenerators are 0.1 lb per hour from each CCR Regenerator and 0.02 lb per hour from the Oleflex regenerator.

4.4.1.2 Steps 1-4

The only feasible control strategy identified for NO_X emissions from continuous catalyst regeneration processes at the HEC petroleum refinery are work practice requirements, namely, operating these processes in accordance with the manufacturer's recommended practices. This control strategy is technically feasible and will not cause any adverse energy, environmental, or economic impacts. Add-on air pollution controls such as SCR, which are described in detail in

Section 4.2.1 herein, are not considered feasible for the catalyst regenerators. The maximum emission reduction that is theoretically achievable is only 0.3 tons of NO_X per year for each unit. The catalyst regenerators are very small units, with exhaust gas flows equivalent to those of boilers with heat input ranging from approximately 1 MMBtu per hour to less than 8 MMBtu per hour. In addition, the exhaust gas temperature is approximately 100 °F, so an exhaust gas heating system would be required in order to make such an add-on control system functional. RTP is not aware of a vendor offering such a system and, even if one were found to be commercially available, it would be economically infeasible to install and operate.

4.4.1.3 Step 5 – Establish BACT

RTP proposes that the NO_X BACT emission limits for the catalyst regenerators at the HEC petroleum refinery be established as 0.1 lb per hour from each CCR Regenerator and 0.02 lb per hour from the Oleflex regenerator, based on adherence to manufacturer's recommended operating practices.

4.4.2 Sulfur Dioxide Emissions

4.4.2.1 BACT Baseline

There are no applicable NSPS or NESHAP rules that would establish a BACT baseline for SO_2 emissions from the catalyst regeneration processes at the HEC petroleum refinery.

Licensors of the proprietary CCR Regenerator catalyst regeneration process used in the Naphtha Reforming Units and Oleflex regenerator process used in the Butane Conversion Complex have indicated to RTP that the concentration of SO_2 in the catalyst regenerator exhaust gases will be approximately 15 ppmv. Based on design maximum exhaust gas flow rates, the SO_2 emission rates from the catalyst regenerators are 0.2 lb per hour from each CCR Regenerator and 0.03 lb per hour from the Oleflex regenerator.

4.4.2.2 Steps 1-4

The only feasible control strategy identified for SO_2 emissions from continuous catalyst regeneration processes at the HEC petroleum refinery are work practice requirements, namely, operating these processes in accordance with the manufacturer's recommended practices. This control strategy is technically feasible and will not cause any adverse energy, environmental, or economic impacts. Add-on air pollution controls such as wet limestone scrubbing are not considered feasible for the catalyst regenerators. The maximum emission reduction that is theoretically achievable is approximately 0.5 tons of SO_2 per year for each unit. The catalyst regenerators are very small units, with exhaust gas flows equivalent to those of boilers with heat input ranging from approximately 1 MMBtu per hour to less than 8 MMBtu per hour. RTP is not aware of a vendor offering such a system and, even if one were found to be commercially available, it would be economically infeasible to install and operate.

4.4.2.3 Step 5 – Establish BACT

RTP proposes that the SO_2 BACT emission limits for the catalyst regenerators at the HEC petroleum refinery be established as 0.2 lb per hour from each CCR Regenerator and 0.03 lb per

hour from the Oleflex regenerator, based on adherence to manufacturer's recommended operating practices.

4.4.3 Carbon Monoxide Emissions

4.4.3.1 BACT Baseline

There are no applicable NSPS or NESHAP rules that would establish a BACT baseline for CO emissions from the catalyst regeneration processes at the HEC petroleum refinery.

Licensors of the proprietary CCR Regenerator catalyst regeneration process used in the Naphtha Reforming Units and Oleflex regenerator process used in the Butane Conversion Complex have indicated to RTP that the concentration of CO in the catalyst regenerator exhaust gases will be approximately 100 ppmv. Based on design maximum exhaust gas flow rates, the CO emission rates from the catalyst regenerators are 0.5 lb per hour from each CCR Regenerator and 0.1 lb per hour from the Oleflex regenerator.

4.4.3.2 Steps 1-4

The only feasible control strategy identified for CO emissions from continuous catalyst regeneration processes at the HEC petroleum refinery are work practice requirements, namely, operating these processes in accordance with the manufacturer's recommended practices. This control strategy is technically feasible and will not cause any adverse energy, environmental, or economic impacts. Add-on air pollution controls such as thermal oxidation are not considered feasible for the catalyst regenerators. The maximum emission reduction that is theoretically achievable is approximately 2 tons of CO per year for each unit. The catalyst regenerators are very small units, with exhaust gas flows equivalent to those of boilers with heat input ranging from approximately 1 MMBtu per hour to less than 8 MMBtu per hour. In addition, the exhaust gas temperature is approximately 100 °F, so a significant amount of fuel would be required in order to achieve effective destruction of CO. Thermal oxidation systems for these units would be economically infeasible to install and operate.

4.4.3.3 Step 5 – Establish BACT

RTP proposes that the CO BACT emission limits for the catalyst regenerators at the HEC petroleum refinery be established as 0.5 lb per hour from each CCR Regenerator and 0.1 lb per hour from the Oleflex regenerator, based on adherence to manufacturer's recommended operating practices.

4.4.4 Particulate Matter Emissions

4.4.4.1 BACT Baseline

There are no applicable NSPS or NESHAP rules that would establish a BACT baseline for particulate matter emissions from the catalyst regeneration processes at the HEC petroleum refinery.

Licensors of the proprietary CCR Regenerator catalyst regeneration process used in the Naphtha Reforming Units and Oleflex regenerator process used in the Butane Conversion Complex have indicated to RTP that the concentration of particulate matter in the catalyst regenerator exhaust gases will be approximately 0.001 grains per standard cubic foot. Based on design maximum exhaust gas flow rates, the PM emission rates from the catalyst regenerators are 0.01 lb per hour from each CCR Regenerator and 0.002 lb per hour from the Oleflex regenerator.

4.4.4.2 Steps 1-4

The only control strategy identified for particulate matter emissions from continuous catalyst regeneration processes at the HEC petroleum refinery are work practice requirements, namely, operating these processes in accordance with the manufacturer's recommended practices. This control strategy is technically feasible and will not cause any adverse energy, environmental, or economic impacts.

4.4.4.3 Step 5 - Establish BACT

Given the negligible particulate matter emissions from the catalyst regeneration processes, RTP proposes that no numeric emission standards be established. Instead, RTP proposes that the permit require adherence to the process licensors' recommended operating practices.

4.5 Cooling Tower

The proposed HEC petroleum refinery and IGCC power plant will require a continual supply of cooled water for heat exchangers, condensers, and other process units. This cooled water will be supplied from a forced-draft, wetted-media type cooling tower. This unit circulates warm "return" water through a media that promotes air/water contact and subsequent cooling by evaporation. This type of cooling tower is a source of particulate matter and VOC emissions.

Particulate matter is emitted from wet cooling towers due to the presence of suspended and dissolved solids in water droplets that drift from the cooling tower. As a droplet that drifts from the tower evaporates, the dissolved solids present in the droplet agglomerate into a single particle. The size of the resulting particle depends on the size of the droplet, the mass of the dissolved solids present in the droplet, and the density of the resulting particle.

Emissions of VOC occur due to evaporation of volatile organic compounds that may be present in the cooling water due to leaks in heat exchangers. As cooling water passes through one side of a water-cooled heat exchanger, if the water side of the exchanger is maintained at a lower pressure than the hydrocarbon fluid side of the exchanger, small amounts of hydrocarbon may leak to the water side.

4.5.1 Particulate Matter Emissions

4.5.1.1 Step 1 – Identify All Control Options

Three particulate matter control options were identified for the proposed cooling system:

- Use of air coolers;
- Use of dry cooling towers; and
- Use of high-efficiency drift eliminators on wet cooling towers.

Where process fluid temperatures are high, air coolers can be used to significantly reduce the fluid temperature. This type of cooling circulates the process fluid through a large bank of radiator coils. These coils are cooled by forced flow of ambient air on the outer finned surfaces of the radiator. Ambient airflow is driven by very large axial propeller fans, typically located below the radiator bank, so that the air is blown upward through the radiator and the warmer air exits the top of the radiator. The limitation on the extent of using air cooling is a function of peak ambient air temperatures and the temperature that the process fluid must be cooled. Air coolers are not feasible for use in cooling process fluids below a 25 ^{o}F temperature delta above the peak ambient air temperature.

A dry cooling tower circulates the process cooling water through a large bank of radiator coils. These coils are cooled by forced flow of ambient air on the outer finned surfaces of the radiator. Ambient airflow is driven by very large axial propeller fans, typically located below the radiator bank, so that the air is blown upward through the radiator and the warmer air exits the top of the tower. Because there is no contact between the process cooling water and the ambient air, and thus no opportunity for drift, a dry cooling tower would not be a source of particulate matter emissions. Dry cooling towers are not feasible for use in cooling process fluids below a 25 ^{o}F temperature delta above the peak ambient air temperature.

A wet cooling tower cools process cooling water by contacting the warm water with air using a forced-draft fan to blow air up through a wetted-media. The air/water contact cools the water through evaporation. For wet cooling towers, high efficiency drift eliminators are developed to reduce entrainment of water droplets in the cooling tower air exiting the top of the tower. Drift eliminators are located perpendicular to the air flow and are designed to collect and remove condensed water droplets from the exhaust air stream. Changes in direction of the air flow passing through the drift eliminator promote removal of droplets by coagulation and impaction on the eliminator surfaces. Particulate matter emissions are thus minimized as drift is minimized.

4.5.1.2 Step 2 – Eliminate Technically Infeasible Control Options

The performance of air coolers and dry cooling towers are limited by the ambient dry-bulb temperature. The design dry-bulb temperature at the proposed site is 105 °F. For air coolers, the achievable temperature delta between the air and the process fluid is 25 °F. As such, process fluids that need to be cooled below 130 °F (25 °F + 105 °F) must have additional cooling provided. Simarly for dry cooling towers, the achievable temperature delta between the air and the cooling water is 25 °F. Typically, the return process cooling water will arrive at the cooling tower at a design temperature of 120 °F. Because the maximum design process fluid and process cooling water temperature is 100 °F or less, the design cooling water temperature or process fluid temperature cannot be achieved using a dry cooling tower or air coolers because the design dry-bulb temperature at the proposed site is 105 °F. Therefore, for process fluid that must be cooled to 130 °F or less, a wet cooling tower is required.

4.5.1.3 Steps 3-5

The only identified, technically feasible control option is the use of fan air coolers in combination with a wet cooling tower equipped with high-efficiency drift eliminators. The most effective, commercially available drift eliminators for a cooling tower in the size range required for the HEC petroleum refinery have a vendor-specified maximum total liquid drift of 0.0005 percent of the circulating water flow rate. There are no significant environmental, energy, or economic impacts associated with this control option.

It should be noted that emission testing is not feasible for wet cooling towers due to exhaust characteristics, so the BACT determination is expressed as an equipment specification rather than an emission limit.

4.5.2 Volatile Organic Compounds

4.5.2.1 Step 1 – Identify All Control Options

Three VOC control options were identified for the proposed cooling tower:

- Replacement of the wet cooling tower with a dry cooling tower; and
- Heat exchanger leak detection and repair.

Although air cooling and dry cooling towers are an inherently less-polluting alternative to a wet cooling tower as described in Section 4.5.1.1 herein, air coolers and dry cooling towers are not technically feasible cooling options for process streams that must be cooled to 130 °F or less. As such, a wet cooling tower is required. VOC emissions from wet cooling towers occur when process fluids under higher pressure than the cooling water results in a leaking of the process fluid into the cooling water.

To minimize the leaking of VOC containing process fluids into cooling water, a heat exchanger leak detection and repair program for water-cooled heat exchangers is technically feasible and effective. This program involves monitoring cooling water for the presence of hydrocarbons, and finding and repairing leaks when hydrocarbons are found. In some instances, suitable control may include installation of hydrocarbon detectors in the exit water downstream of the exchanger to identify leaking units. In addition, this measure would include systematic inspection, preventive maintenance, and repair programs to avoid leakage. This latter function can include routine replacement of seals, exchanger cleaning, and pressure testing of exchanger vessels.

4.5.2.2 Step 2 – Eliminate Technically Infeasible Control Options

A dry cooling tower is a technically infeasible control option for the reasons described in Section 4.5.1.2 herein.

4.5.2.3 Steps 3-4

The only technically feasible control option is the implementation of a heat exchanger leak detection and repair program. No adverse energy, environmental, or economic impacts are associated with this control option.

4.5.2.4 Step 5 – Establish BACT

It should be noted that emission testing is not feasible for wet cooling towers due to exhaust characteristics, so the BACT determination is expressed as a work practice requirement rather than an emission limit.

The proposed heat exchanger leak detection and repair program involves application of hydrocarbon detectors downstream the return water outlet from process heat exchanger banks or units where a process fluid containing VOC is at a higher pressure than the cooling water.

4.6 Sulfur Recovery Plant

As described in detail in Section 2.2.14 herein, the HEC refinery design includes six complete sulfur recovery trains, sized so that four trains can meet the facility's sulfur recovery requirements while two trains are offline. Each of the six sulfur recovery trains will include a Claus reactor train, a tail gas treater, and a thermal oxidizer. This redundancy in the process is crucial to effective air pollution control, as the Sulfur Recovery Plant serves primarily to reduce atmospheric emissions.

The Claus reactor trains will convert approximately 97 percent of the H_2S in the acid gas feed to elemental sulfur. The tail gas treaters will recover additional sulfur compounds from the Claus reactor tail gas and recycle them back to the inlet of the Claus reactors. Overall, the Claus reactors and tail gas treater combination will continuously convert more than 99.9 percent, and at maximum inlet load will convert 99.97 percent, of the H_2S in the sulfur plant feed to elemental sulfur. The tail gas treater exhaust gases, including unrecovered sulfur compounds, are routed to a thermal oxidizer for safe disposal.

The proposed technology selection is generally similar to that used by most petroleum refineries, with additional redundancy beyond that present in typical installations. This is because equipment reliability is of paramount importance in Sulfur Recovery Plant design, and the demonstrated reliability of the proposed equipment configuration is unsurpassed. When operating at its nominal maximum short-term feed rate capacity of 2,040 long tons per day, the plant is processing more than 190,000 pounds of sulfur per hour. At this rate, if the Sulfur Recovery Plant were to experience a total failure, the SO_2 emissions from acid gas flaring would exceed three tons per minute. Thus, equipment reliability and availability are crucial in order to ensure that emissions are minimized.

4.6.1 Sulfur Dioxide and Sulfuric Acid Mist Emissions

4.6.1.1 BACT Baseline.

Based on the proposed standards under subpart Ja of 40 CFR part 60, as discussed in Section 3.2.6 herein, the highest allowable emission limit which would meet BACT requirements for the Sulfur Recovery Plant at the HEC refinery is expressed as a limit on the combined concentration of SO_2 and H_2S in the exhaust gas. The limit is 250 ppmv, expressed as SO_2, corrected to zero oxygen, based on a twelve-hour rolling average.

4.6.1.2 Step 1 – Identify All Control Options

The most effective control strategy for SO_X emissions would involve simply eliminating the sulfur recovery plant, and allowing acid gases from the Amine Regeneration Unit, Sour Water Stripper Unit, and other equipment to be emitted to the atmosphere. Because that option would be inconsistent with the BACT determination for H_2S emissions and would be unsafe, it will not be considered further.

Four other control options are the proposed equipment configuration, described previously, and three variations on that configuration: The Claus reactor trains could be installed and operated with neither tail gas treaters nor thermal oxidizers; with the tail gas treaters, but without the thermal oxidizers; or with the thermal oxidizers and without the tail gas treaters. Because each of these control options would either be unsafe or would be incapable of achieving the BACT baseline, none will be considered further.

There exist a large number of proprietary adaptations of the Claus reactor technology. For the purposes of this BACT analysis, these are not considered alternatives to the proposed configuration, but are considered as falling within the general technology description provided above. The capabilities attributed to the proposed equipment configuration take into account the performance levels that are achievable with these proprietary adaptations. One of the most widespread adaptations is the use of proprietary catalysts in the Claus catalytic reactors, without modifying the reactor configuration, in order to increase hydrolysis of COS and CS_2 to H_2S, which then participates in the Claus reaction for an improvement in overall sulfur recovery efficiency.

Several of the proprietary adaptations operate by extending the Claus reaction to improve the thermodynamically achievable sulfur conversion efficiency, allowing the modified Claus reactor train to achieve compliance with most regulatory emission standards without the need for a tail gas treater. One example of these proprietary adaptations is the Superclaus® process, which is a conventional Claus process, with a proprietary catalyst replacing the conventional, activated alumina Claus catalyst in the final catalytic reactor stage. The proprietary catalyst in the Superclaus® process selectively oxidizes H_2S to form elemental sulfur and water according to the following equation:

$$2\ H_2S + O_2 \rightleftharpoons 2\ S + 2\ H_2O$$

The Superclaus® process reportedly increases the thermodynamically achievable sulfur recovery efficiency to approximately 99.4 percent, as compared to an achievable efficiency less than 98 percent with the conventional Claus process.

Another example is the Euroclaus® process, which is an enhancement of the Superclaus® process, with a hydrogenation reactor inserted upstream of the final catalytic reactor stage. This hydrogenation reactor reduces the SO_2 concentration in the final reactor stage, which reportedly increases the thermodynamically achievable sulfur recovery efficiency to approximately 99.7 percent.

The Sulfreen® process is an example of a proprietary adaptation that utilizes a conventional Claus process, with an additional Claus-type reactor after the final sulfur condenser. This additional reactor operates at a temperature below the sulfur dew point and adsorbs the sulfur on the Claus catalyst. Each of the two beds in the additional reactor is cycled between adsorption and regeneration; during the regeneration cycle, the hot gases are produced in an integral heater and, after desorbing the sulfur from the catalyst, are passed through an integral condenser. Operation of the additional reactor at a sub-dew point temperature reportedly improves the thermodynamically achievable sulfur recovery efficiency to approximately 99 percent. Variations on the Sulfreen® process include HydroSulfreen®, which includes a hydrogenation/hydrolysis reactor upstream of the Sulfreen® reactor, and DoxoSulfreen®, which includes all components of the HydroSulfreen® process, plus a direct oxidation reactor downstream of the Sulfreen® reactor. HydroSulfreen® and DoxoSulfreen® reportedly improve the achievable sulfur recovery efficiency to approximately 99.7 percent and 99.9 percent, respectively.

Wet scrubbing is another control option, separate and distinct from the equipment configuration proposed for the Sulfur Recovery Plant at the HEC petroleum refinery. Two examples of demonstrated, proprietary wet scrubbing technologies for sulfur recovery plants are the Wellman-Lord and Clintox® processes. The wet scrubbing control option would require an upstream combustion device, in order to convert reduced sulfur compounds to SO_2, and could be used either with or without a Claus reactor train upstream of the combustion device. When used in conjunction with an upstream Claus reactor train, these technologies allow the SO_2 to be stripped from the solvent and returned to the front end of the Claus reactor train. In this configuration, each of these technologies reportedly is capable of achieving a sulfur recovery efficiency in excess of 99.9 percent.

Stretford, Z-SORB, LO-CAT®, and CrystaSulf® are proprietary liquid-phase oxidation-reduction technologies providing indirect oxidation of H_2S to form elemental sulfur and water. The Stretford process uses a vanadium-based chelating agent, the Z-SORB process uses a zinc-based chelating agent, and the LO-CAT® and CrystaSulf® technologies use proprietary, iron-based chelating agents. When installed in conjunction with an upstream Claus reactor train and hydrogenation/hydrolysis reactor, each of these technologies reportedly is capable of achieving a sulfur recovery efficiency in excess of 99.9 percent.

The Shell Claus Offgas Treating ("SCOT") process is the most commonly used process for removal of sulfur from Claus SRU vent streams and is the basis for the tail gas treater at the

proposed HEC petroleum refinery. As described above, an MDEA-based solvent is generally used in the amine absorber columns within the tail gas treater. As with the Claus reactor train, there exist numerous proprietary adaptations on the SCOT process, generally involving the use of proprietary solvents. For the purposes of this BACT analysis, these are not considered alternatives to the proposed configuration, but are considered as falling within the general technology description already provided. The capabilities attributed to the proposed equipment configuration take into account the performance levels that are achievable with these proprietary adaptations. Available proprietary solvents for use in tail gas treating include as Sulften®, Flexsorb® SE, or Flexsorb® SE Plus, in place of the general MDEA solvent.

4.6.1.3 Step 2 – Eliminate Technically Infeasible Control Options

Several of the identified, proprietary technologies are considered technically infeasible because they have not been demonstrated to function efficiently in removing sulfur from acid gas streams from petroleum refinery sour water stripping units and amine regeneration units. These include the CrystaSulf® and LO-CAT® processes.

4.6.1.4 Step 3 – Characterize Control Effectiveness of Technically Feasible Control Options

The proposed equipment configuration is the second-ranked control option with respect to SO_X emissions. This control option will achieve an overall sulfur recovery efficiency of 99.97 percent at maximum sulfur load to the Sulfur Recovery Plant.

The top-ranked SO_X control option comprises Claus reactor trains followed by wet scrubbers rather than tail gas treaters and thermal oxidizers. This control option has not been demonstrated to achieve overall sulfur recovery efficiencies as high as the 99.97 percent that will be achieved with the proposed configuration, but the maximum SO_X emission rate would be somewhat less, because most of the unrecovered sulfur would be emitted as H_2S and other reduced sulfur compounds.

4.6.1.5 Step 4 – Evaluate More Effective Control Options

The top-ranked control option is not representative of BACT due to the adverse environmental impacts that would result. This Sulfur Recovery Plant equipment configuration would allow sulfur to be emitted to the atmosphere at a rate at least as high as the equipment configuration proposed, but this sulfur would be emitted to the atmosphere in a form that is more toxic than SO_2.

4.6.1.6 Step 5 – Establish BACT

The proposed SO_X BACT emission limits are mass emission rate limits representing 99.97 percent sulfur recovery efficiency at maximum load to the Sulfur Recovery Plant. RTP is not aware of any sulfur recovery plant that is subject to more stringent sulfur emission limits.

As described in Section 2.1.2 herein, Hyperion is considering two alternative configurations for the IGCC power plant. Under the maximum coke design case, the maximum sulfur load is 2,040 long tons per day and the proposed SO_X emission limit is 114.2 lbs/hr, based on a three-hour average, reported as SO_2. Under the natural gas design case, the maximum sulfur load is 1,884

long tons per day and the proposed SO_2 emission limit is 105.5 lbs/hr, based on a three-hour average, reported as SO_2.

The proposed BACT for the Sulfur Recovery Plant also addresses SO_2 emissions that would occur from the emergency flares during a major upset at the Sulfur Recovery Plant. (The feed materials for the sulfur recovery plant, sour gases primarily from the Amine Regeneration Unit and the Sour Water Stripper Unit, are rich in H_2S. The toxicity of H_2S is such that these gas streams must be combusted rather than released directly to the atmosphere.) In the event of an upset that results in flaring of acid gases, Hyperion will re-route the Amine Regeneration Unit and Sour Water Stripper Unit feed materials (*i.e.*, rich amine solution and sour water) within 15 minutes; will curtail operations at upstream process units where rich amine solution and sour water are generated; and will maintain storage capacity for rich amine solution and sour water sufficient to support 24 hours of operation of one Claus reactor train. This allows sufficient time for startup and or ramp up of one or more of the other Sulfur Recovery Units.

4.6.2 Hydrogen Sulfide Emissions

4.6.2.1 BACT Baseline.

Based on the proposed standards under subpart Ja of 40 CFR part 60, as discussed in Section 3.2.6 herein, the highest allowable emission limit which would meet BACT requirements for the Sulfur Recovery Plant at the HEC refinery is expressed as a limit on the H_2S concentration in the exhaust gas. The limit is 10 ppmv, dry basis, corrected to zero oxygen, based on a twelve-hour rolling average.

4.6.2.2 Steps 1-4

The technically feasible control options for H_2S emissions from the Sulfur Recovery Plant are the same as those identified for SO_2 emissions. The proposed equipment configuration is the top-ranked control option for H_2S emissions, and the wet scrubber alternative is the second-ranked control option.

4.6.2.3 Step 5 – Establish BACT

The proposed H_2S BACT emission limit is a mass emission rate limit of 0.3 lb/hr, based on an hourly rolling three-hour average. RTP is not aware of any sulfur recovery plant that is subject to a more stringent H_2S emission limit.

4.6.3 NO_X Emissions

The combustion of refinery fuel gas or natural gas in the thermal oxidizers will result in emissions of NO_X.

4.6.3.1 Step 1 – Identify All Control Options

The identified control options for reducing NO_X emissions from refinery fuel gas and natural gas firing in the thermal oxidizers include all of those options addressed in Section 4.2.1, for NO_X emissions from process heaters firing refinery fuel gas. In addition, the Claus reactor trains and tail gas treaters could be installed and operated without thermal oxidizers.

4.6.3.2 Step 2 – Eliminate Technically Infeasible Control Options

Installation and operation of the Claus reactor trains and tail gas treaters without thermal oxidizers is considered technically infeasible because it would allow uncombusted hydrogen sulfide to be emitted to the atmosphere. Hydrogen sulfide is significantly more toxic than SO_2, and the thermal oxidizers are necessary to ensure safe operation of the Sulfur Recovery Plant.

Flue gas recirculation is technically infeasible because it would unacceptably lessen the effectiveness of the thermal oxidizer. Flue gas recirculation achieves NO_X reduction in certain boiler applications by reducing oxygen concentration and reducing flame temperature. Both oxygen concentration and flame temperature are directly related to H_2S destruction efficiency in the thermal oxidizers.

No add-on air pollution control equipment is technically feasible for application to the thermal oxidizers. In particular, the thermal oxidizer exhaust will include very high levels of SO_2 during infrequent malfunctions of the tail gas treaters. These elevated SO_2 concentrations, even for very short periods, would foul and poison the catalysts used in SCR or EMx™ systems. In addition, add-on control equipment would lessen the reliability of the thermal oxidizers. Because the thermal oxidizers serve primarily as safety devices, any design changes that would lessen reliability and that could result in discharge of uncombusted H_2S is considered technically infeasible.

4.6.3.3 Steps 3-5

The only technically feasible control option for reducing NO_X emissions from the thermal oxidizers is the use of low-NO_X burners. This control option will not result in any adverse energy, economic, or environmental impacts.

The proposed BACT emission limit for NO_X emissions from each of the thermal oxidizers at the HEC petroleum refinery sulfur recovery plant is 0.068 lb per MMBtu heat input, based on a 3-hour average. This proposed emission limit is more stringent than any limit achieved by any petroleum refinery of which RTP is aware.

4.6.4 Particulate Matter Emissions

Particulate matter emissions will be generated in the thermal oxidizers both due to combustion of natural gas or refinery fuel gas as auxiliary fuel and due to the combustion of sulfur-containing exhaust gases from the tail gas treating units.

4.6.4.1 Step 1 – Identify All Control Options

The only identified control options for reducing particulate matter emissions from the thermal oxidizers are adherence to good combustion practices and, as described in Section 4.6.3, the Claus reactor trains and tail gas treaters could be installed and operated without thermal oxidizers.

4.6.4.2 Step 2 – Eliminate Technically Infeasible Control Options

Installation and operation of the Claus reactor trains and tail gas treaters without thermal oxidizers is considered technically infeasible because it would allow uncombusted hydrogen

sulfide to be emitted to the atmosphere. Hydrogen sulfide is significantly more toxic than SO_2, and the thermal oxidizers are necessary to ensure safe operation of the Sulfur Recovery Plant.

4.6.4.3 Steps 3-5

The only technically feasible control option for reducing particulate matter emissions from the thermal oxidizers is adherence to good combustion practices. This control option will not result in any adverse energy, economic, or environmental impacts.

The proposed BACT emission limit for particulate matter emissions from the thermal oxidizers at the HEC petroleum refinery sulfur recovery plant is 11.2 lbs/hr. This proposed emission limit is more stringent than any limit achieved by any sulfur recovery plant of which RTP is aware.

4.6.5 CO and VOC Emissions

The combustion of refinery fuel gas or natural gas in the thermal oxidizers will result in emissions of CO and VOC.

4.6.5.1 Step 1 – Identify All Control Options

The identified control options for reducing emissions from refinery fuel gas and natural gas firing in the thermal oxidizer include all of those options addressed in Sections 4.2.3 through 4.2.5, for process heaters firing refinery fuel gas. In addition, the Claus reactor trains and tail gas treaters could be installed and operated without thermal oxidizers.

4.6.5.2 Step 2 – Eliminate Technically Infeasible Control Options

Installation and operation of the Claus reactor trains and tail gas treaters without thermal oxidizers is considered technically infeasible because it would allow uncombusted hydrogen sulfide to be emitted to the atmosphere. Hydrogen sulfide is significantly more toxic than SO_2, and the thermal oxidizers are necessary to ensure safe operation of the Sulfur Recovery Plant.

No add-on air pollution control equipment is technically feasible for application to the thermal oxidizers. In particular, the thermal oxidizer exhaust will include very high levels of SO_2 during infrequent malfunctions of the tail gas treaters. These elevated SO_2 concentrations, even for very short periods, would foul and poison oxidation catalyst. In addition, add-on control equipment would lessen the reliability of the thermal oxidizers. Because the thermal oxidizers serve primarily as safety devices, any design changes that would lessen reliability and that could result in discharge of uncombusted H_2S is considered technically infeasible.

4.6.5.3 Steps 3-5

The only technically feasible control option for the thermal oxidizers is adherence to good combustion practices. This control option will not result in any adverse energy, economic, or environmental impacts.

The proposed BACT emission limit for CO and VOC emissions from the thermal oxidizers is the H_2S emission limit described in Section 4.6.2.3 herein. RTP is proposing that the H_2S emission limit serve as a surrogate for CO and VOC emissions because compliance with the H_2S emission limit will require adherence to good combustion practices, which is the technology basis for the

CO and VOC BACT determinations, and because compliance with the H_2S emission limit will be determined using a continuous emissions monitoring system.

4.7 Storage Tanks

As described in Section 2.2.17 herein, the proposed HEC petroleum refinery will include 104 above-ground cylindrical storage tanks for volatile organic liquids, 12 above-ground cylindrical storage tanks for water or inorganic liquids, and 31 pressurized storage vessels.

The pressurized storage vessels (*i.e.*, spheres or bullets) are not sources of emissions and do not require any BACT analysis. (Emissions that may occur as a result of leaks in piping and equipment, including leaks in piping and equipment in the Tank Farm, are discussed in Section 4.10 herein.) Ten of the twelve inorganic liquid storage tanks, storing water or aqueous solutions, also are not sources of emissions of any regulated air pollutants and do not require any BACT analysis. This section of the permit application presents RTP's proposed BACT analysis for the remaining 106 above-ground cylindrical storage tanks, 2 storing liquid sulfur and 104 storing volatile organic liquids. A detailed listing of these tanks with contents, tank sizes, throughput, and emission estimation parameters is provided in Appendix C.

Emissions from storage tanks occur as a result of displacement of headspace vapor during filling operations in the case of fixed roof or internal floating roof tanks, or from tank rim seals in the case of external floating roof tanks (*i.e.*, "working losses"). To a lesser degree, diurnal temperature variations and solar heating cycles also result in emissions from storage tanks (*i.e.*, "breathing losses").

4.7.1 Volatile Organic Compounds Emissions

4.7.1.1 BACT Baseline

Based on the applicable standards under subpart Kb of 40 CFR part 60, as discussed in Section 3.2.7 herein; subpart FF of 40 CFR part 61, as discussed in Section 3.3.5 herein; and subpart CC of 40 CFR part 63, as discussed in Section 3.3.13 herein, the least stringent emission standards that would meet BACT requirements for the volatile organic liquid storage tanks at the HEC refinery are as follows:

4.7.1.1.1 Tanks not Requiring Control

For eleven tanks, the applicable NSPS and NESHAP rules do not require any control of VOC emissions due to the low vapor pressure of tank contents. These tanks are as follows:

- Rich amine storage tanks
- Lean amine storage tanks
- Vacuum gas oil storage tanks
- Coker heavy gas oil storage tanks
- Atmospheric gas oil storage tank
- Coker charge tanks

4.7.1.1.2 Tanks Requiring Control

For all remaining above-ground, cylindrical storage tanks storing organic liquids, VOC emission controls are required. Available compliance options include the use of an external floating roof meeting certain design specifications; using a fixed roof with an internal floating roof meeting certain design specifications; and using a closed-vent system and control device meeting certain design specifications and operational requirements.

4.7.1.2 Step 1 – Identify All Control Options

Available VOC control options for organic liquid storage tanks include inherently less-polluting processes, control equipment designed to minimize vapor leakage from the tanks, end-of-pipe air pollution control equipment, and combinations thereof. Specific, identified options are as follows:

- Routing vapors to a process or a fuel gas system via hard piping, such that the vessel operates with no emissions;
- Fixed roof in combination with an internal floating roof and with vapor collection in a closed vent system routed to a control device (*e.g.*, thermal oxidizer);
- Fixed roof in combination with an internal floating roof;
- External floating roof; and
- Fixed roof with vapor collection by a closed vent system routed to a control device (*e.g.*, thermal oxidizer or carbon adsorber).

It should be noted that, for many tanks, the use of a fixed roof in combination with an internal floating roof is inherent to the process and would be applied even in the absence of air pollution control requirements. This is the case because the VOC emissions from these tanks represent the petroleum refinery's raw materials, intermediates, or finished products. The effectiveness of internal floating roof technology in controlling VOC emissions is equal to its effectiveness in minimizing loss of valuable raw materials, intermediates, and finished products.

4.7.1.3 Step 2 – Eliminate Technically Infeasible Control Options

The most effective control option, operating the tank with no emissions by routing all sweep gases to a process or a fuel gas system, is an inherently less-polluting process configuration. This control option is feasible only for tanks storing liquids that are compatible with the process or fuel gas system into which the gases would be routed.

The control options involving internal floating roof and external floating roof tank designs are not technically feasible for the Coker Charge Tanks due to the asphalt-like nature of the material being stored and due to the storage temperature of approximately 425 °F.

All other identified control options are technically feasible for all storage tanks.

4.7.1.4 Step 3 – Characterize Control Effectiveness of Technically Feasible Control Options

Storage tank control options, in order of decreasing overall control effectiveness, are presented below:

4.7.1.4.1 Routing vapors to a process or a fuel gas system via hard piping, such that the vessel operates with no emissions

Where it is technically feasible, this design is nearly 100 percent effective in reducing emissions from storage tanks.

4.7.1.4.2 Fixed roof in combination with internal floating roof and with vapor collection in a closed vent system routed to a control device

This design incorporates a roof structure that floats on the surface of the stored liquid, with dual flexible seals along the edge of the roof. This design effectively eliminates working losses. As further control, the headspace between the floating roof and the top of the tank is filled with sweep gas that is vented under slight vacuum. The breathing losses that escape through tank penetrations and seals are carried with the sweep gas to an add-on control device such as a thermal oxidizer.

4.7.1.4.3 Fixed roof with vapor collection by a closed vent system routed to a control device

This design is similar to that described in Section 4.7.1.4.2 but omits any control equipment (*e.g.*, floating roof) designed to minimize generation of VOC-laden vapors, instead relying only on an end-of-pipe air pollution control device.

4.7.1.4.4 Internal floating roof and dual rim seals

This design is the same basic configuration as the previous option, but does not include a sweep gas routed to a control device. This control option is proposed for most of the storage tanks at the HEC petroleum refinery.

4.7.1.4.5 External floating roof with dual rim seals

This design is similar to the internal floating roof configuration described above, but without the enclosed headspace. The floating roof and seals act to reduce volatilization losses.

4.7.1.5 Step 4 - Evaluate More Effective Control Options

The proposed equipment configuration representing BACT for 95 of the 104 volatile organic liquid storage tanks at the HEC petroleum refinery is the use of internal floating roof with dual rim seals meeting the new source MACT requirements in subpart G of 40 CFR part 63, as discussed in Sections 3.3.9 and 3.3.13 herein. For these tanks, two potentially more effective control options are rejected as BACT due to significant adverse impacts. For the remaining nine tanks, the proposed equipment representing BACT is a fixed roof tank with no VOC emission controls. For these tanks, all of the identified VOC control options are rejected due to significant adverse impacts.

4.7.1.5.1 Routing vapors to a process or a fuel gas system via hard piping, such that the vessel operates with no emissions

This control option would result in adverse energy and environmental impacts due to the significant electrical power demand of the required compression system. These adverse impacts are relatively minor and are not a significant factor in the BACT determination.

This control option would result in very significant, adverse economic impacts and is rejected as BACT on that basis. As shown in detail in Appendix D to this permit application, the costs of applying this control option would be approximately $50,000 per ton of VOC emission reduction.

It should be noted that, although this control option is theoretically possible, RTP is not aware of any petroleum refinery operating with this equipment configuration on any cylindrical storage tanks. In fact, to our knowledge, U.S. EPA has never even identified this as a control option for consideration in establishing MACT for storage tanks at refineries or other types of sources.

4.7.1.5.2 Use of a closed vent system routed to a thermal oxidizer

For the purpose of the BACT impacts analysis, the two control options described in Sections 4.7.1.4.2 and 4.7.1.4.3 were evaluated together. For tanks storing relatively volatile materials, an internal floating roof configuration is considered inherent to the process for product loss minimization and is considered the baseline control scenario for the evaluation of this more effective control option. For the tanks storing less volatile materials, an uncontrolled fixed roof configuration is considered the baseline control scenario.

These control options would result in adverse energy and environmental impacts due to the auxiliary fuel needs for the required thermal oxidizer. These adverse impacts are relatively minor and are not a significant factor in the BACT determination.

This control option would result in very significant, adverse economic impacts and is rejected as BACT primarily on that basis. As shown in detail in Appendix D to this permit application, the costs of applying this control option to just the highest-emitting tanks would be approximately $12,000 per ton of VOC emission reduction; extending this control to all tanks would increase the costs to approximately $16,000 per ton of VOC emission reduction.

It should be noted that, although this control option is theoretically possible, RTP is not aware of any petroleum refinery operating with this equipment configuration on any cylindrical storage tanks. In fact, to our knowledge, U.S. EPA has never even identified this as a control option for consideration in establishing MACT for storage tanks at refineries or other types of sources.

4.7.1.5.3 Internal floating roof and dual rim seals

This control option would not result in any adverse energy or environmental impacts.

For the seven organic liquid storage tanks for which this control option is technically feasible and is not proposed as BACT, this control option is rejected based on negligible environmental benefits and significant, adverse economic impacts. The uncontrolled emissions from these tanks total only 40 tons per year. As described in detail in Appendix D, the cost of applying this control option would exceed $16,000 per ton of VOC emission reduction.

4.7.1.5.4 External floating roof with dual rim seals

This control option would not result in any adverse energy or environmental impacts.

For the seven organic liquid storage tanks for which this control option is technically feasible and for which the proposed BACT control option is less effective in controlling VOC emissions,

this control option is rejected based on negligible environmental benefits and significant, adverse economic impacts. The uncontrolled emissions from these tanks total only 40 tons per year. As described in detail in Appendix D, the cost of applying this control option would exceed $15,000 per ton of VOC emission reduction.

4.7.1.6 Step 5 – Establish BACT

For the 95 organic liquid storage tanks proposed to be equipped with an internal floating roof design, as indicated in Appendix A to the permit application, the proposed BACT emission standard is compliance with the equipment design and work practice requirements set forth at § 63.119 of subpart G of 40 CFR part 63.

For the Coker Charge Tanks, the proposed equipment configuration is a fixed roof tank with no VOC emissions control. These tanks are discussed further in Section 4.7.2 herein.

For the remaining seven organic liquid storage tanks proposed to be equipped as fixed roof tanks without an internal floating roof, no VOC emissions control is proposed. The proposed BACT emission limitation is compliance with the applicable requirements of subparts G and CC of 40 CFR part 63, generally constraining the vapor pressure of the stored materials.

4.7.2 Particulate Matter Emissions

Two of the organic liquid storage tanks discussed in Section 4.7.1 herein are the Coker Charge Tanks, storing vacuum residuum. This material is similar to asphalt and has negligible vapor pressure at ambient temperatures. However, at the HEC petroleum refinery, these tanks will be maintained at a storage temperature of approximately 425 °F in order to facilitate pumping. At this temperature, the material has an absolute vapor pressure of approximately 0.04 pounds per square inch (psia). As a result, these tanks are potential sources of emissions. It is theoretically possible to maintain the displaced vapors from these tanks at elevated temperatures such that the emissions could be controlled using thermal oxidation. This option was considered and rejected as BACT as described in Section 4.7.1 herein. Under any other configuration, the emissions of organic material from this tank would form a particulate aerosol. Accordingly, the emissions from these two tanks are also addressed as particulate matter. It should be emphasized that these emissions are the same material already addressed in Section 4.7.1.

4.7.2.1 BACT Baseline

There are no applicable NSPS or NESHAP rules that would establish a baseline for particulate matter emissions from the Coker Charge Tanks.

4.7.2.2 Step 1 – Identify All Control Options

Identified control technologies for particulate matter emissions from the Coker Charge Tanks include condensation, incineration, electrostatic precipitation, and filtration.

4.7.2.3 Step 2 – Eliminate Technically Infeasible Control Options

Electrostatic precipitation is technically infeasible for control of particulate matter emissions from the Coker Charge Tanks because the vacuum residuum material is highly agglomerative and could not be effectively dislodged from the plates.

4.7.2.4 Step 3 – Characterize Control Effectiveness of Technically Feasible Control Options

Incineration is presumed for the purposes of this analysis to be the most effective option for controlling particulate matter emissions from the Coker Charge Tanks. As described in Section 4.7.1 herein, this control option is capable of achieving greater than 98 percent control efficiency for organic emissions from storage tanks.

The second most effective control strategy involves the use of condensation and filtration in combination. This control strategy is widely applied for control of particulate matter emissions from tanks storing vacuum residuum, asphalt, and similar materials and is proposed as the basis for the particulate matter BACT determination for the Coker Charge Tanks at the HEC petroleum refinery. This control strategy is estimated to remove greater than 90 percent of the material from the gases vented from the Coker Charge Tanks.

4.7.2.5 Step 4 – Evaluate More Effective Control Options

For the reasons described in Section 4.7.1.5, incineration (*i.e.*, thermal oxidation) does not represent BACT for emissions from the Coker Charge Tanks because it would yield minimal environmental benefit and would result in significant, adverse environmental, energy, and economic impacts.

The proposed control strategy for particulate matter emissions from the Coker Charge Tanks involves a combination of condensation and filtration. Specifically, the exhaust gases from these tanks will be cooled to a temperature of 120 °F or less and will be vented through a fiberglass or steel wool filter.

4.7.2.6 Step 5 – Establish BACT

The proposed particulate matter emission limitations for the Coker Charge Tanks include a visible emissions standard and a set of work practices. Specifically, the gases vented from these tanks will be cooled to a temperature of 120 °F or less and will be vented through a fiberglass or steel wool filter. Implementation of these work practices will achieve compliance a visible emissions standard of zero opacity. RTP is not aware of any tanks storing vacuum residuum and subject to a more stringent particulate matter emission limit.

4.7.3 Hydrogen Sulfide Emissions

The liquid sulfur produced in the Sulfur Recovery Plant and stored in the Sulfur Tanks will include a small amount of residual H_2S. As a result, these tanks are sources of H_2S emissions.

4.7.3.1 Steps 1-4

Control options for the Sulfur Tanks include degassing the sulfur prior to storage and routing the displaced gases to a thermal oxidizer. Each of these options is technically feasible. The first option is considered a pollution prevention activity because the H_2S removed from the liquid sulfur is routed to the Sulfur Recovery Plant for recovery as a salable product. This option has no adverse environmental or energy impacts. The second option would result in slight, adverse energy impacts due to the need for supplemental fuel and significant, adverse environmental impacts because nearly all of the sulfur in the vented gases would be oxidized to SO_2.

4.7.3.2 Step 5 – Establish BACT

BACT for the Sulfur Tanks is a requirement that the sulfur be degassed to a maximum H_2S concentration of 15 parts per million by weight prior to storage.

4.8 Product Loading Racks

4.8.1 Volatile Organic Compounds Emissions

As described in Section 2.2.18 herein, the proposed refinery will include loading racks for transferring LPG, gasoline, and distillate products to rail cars and tank trucks. The LPG system loading will be designed with vapor balancing and will not be a source of VOC emissions. The gasoline and distillate product loading racks are sources of VOC emissions.

4.8.1.1 BACT Baseline

Based on the emission standards under subpart CC of 40 CFR part 63, as discussed in Section 3.3.13 herein, the highest allowable emission limit which would meet BACT requirements for VOC emissions from the gasoline loading racks at the HEC refinery is expressed as a limit of 10 milligrams of total non-methane, non-ethane organic compounds per liter of gasoline loaded. There are no NSPS or NESHAP emission limits, and therefore no BACT baseline, for distillate product loading racks.

4.8.1.2 Step 1 – Identify All Control Options

Identified control technologies for VOC emissions from loading racks include carbon adsorption, condensation, and incineration.

4.8.1.3 Step 2 – Eliminate Technically Infeasible Control Options

Each of the identified control technologies is technically feasible for application to the gasoline and distillate product loading racks at the HEC petroleum refinery.

4.8.1.4 Step 3 – Characterize Control Effectiveness of Technically Feasible Control Options

The most effective of the identified control options is a vacuum-regenerated, carbon adsorption-based vapor recovery system designed to comply with a VOC emission limit of 1.25 pounds per million gallons of product loaded.

4.8.1.5 Step 4 – Evaluate More Effective Control Options

A vacuum-regenerated, carbon adsorption-based vapor recovery system designed to comply with a VOC emission limit of 1.25 pounds per million gallons of product loaded is proposed as BACT for the gasoline and distillate product loading racks at the HEC petroleum refinery. This system will not result in any adverse energy or environmental impacts. As this is the most effective of the identified control options for VOC emissions, no evaluation of alternative control options is warranted.

4.8.1.6 Step 5 – Establish BACT

The emission limit representing BACT for VOC emissions from the gasoline and distillate product loading racks at the HEC petroleum refinery is 1.25 pounds of total non-methane, non-ethane organic compounds per million gallons of product loaded, based on a rolling three-hour average. RTP is not aware of any loading racks subject to a more stringent VOC emission limit.

4.8.2 Fugitive Particulate Matter Emissions

As described in Section 2.2.18 herein, the proposed refinery will include truck loading racks for transferring LPG, gasoline, and distillate products. The truck traffic associated with the loading rack operations will generate a small amount of fugitive particulate matter emissions. As is the typical practice at petroleum refineries, all active roads and parking lots will be paved. As such, all truck traffic going to and leaving the product loading racks will be over paved road surfaces.

4.8.2.1 BACT Baseline

There are no applicable NSPS or NESHAP emission limits, and therefore no BACT baseline, for truck traffic on paved roads.

4.8.2.2 Step 1 – Identify All Control Options

Identified control options for truck traffic on paved roads include sweeping, vacuuming and wetting of roads.

4.8.2.3 Step 2 – Eliminate Technically Infeasible Control Options

Each of the identified control technologies is technically feasible for application to the paved roads over which the product truck traffic will pass at the HEC petroleum refinery.

4.8.2.4 Step 3 – Characterize Control Effectiveness of Technically Feasible Control Options

The most effective of the identified control options is vacuum sweeping, followed by road wetting. Road wetting could not be practiced when road temperatures fall below freezing. Because freezing conditions will exist for significant periods of time at the proposed site, this option is not considered as effective as vacuum sweeping.

4.8.2.5 Step 4 – Evaluate More Effective Control Options

As presented in 5.1.7, the truck traffic over the short round trip distance of 0.56 mile to and from the product loading racks will result in PM and PM-10 emissions of 3.6 and 0.7 tons per year, respectively. The annualized costs of purchasing, maintanining and operating vacuum sweeping equipment would exceed $100,000 per year and would achieve approximately 70 to 80 percent reduction in PM-10 emissions. The cost effectiveness would be well in excess of $100,000 per ton of PM-10 emission reduction.

4.8.2.6 Step 5 – Establish BACT

The emission limit representing BACT for particulate matter emissions from truck traffic at the HEC petroleum refinery loading racks is a requirement to maintain all road surfaces in a paved

condition. RTP is not aware of any petroleum refinery loading racks subject to more stringent requirements.

4.9 Wastewater Treatment Plant

4.9.1 Volatile Organic Compounds Emissions

As described in Section 2.2.16 herein, the proposed refinery will include several vessels that are sources of VOC emissions.

4.9.1.1 BACT Baseline

The minimum emission standards that would meet BACT requirements for VOC emissions from the wastewater treatment plant are the equipment design and work practice requirements set forth in the following rules:

- Subpart QQQ of 40 CFR part 60, as discussed in Section 3.2.17 herein. This rule would generally require water seal controls or more effective controls for the wastewater collection system drains and sumps and either a floating roof or a closed-vent system and a control device, such as a catalytic oxidizer, for the API Separators. This rule would not apply to the Primary DAF Units, Equalization Tanks, Aeration Tanks, or any downstream treatment processes.
- Subpart FF of 40 CFR part 61, as discussed in Section 3.3.5 herein. This rule generally requires the same controls for the wastewater collection system drains and sumps as are required by subpart QQQ of 40 CFR part 60. For the API Separators, Primary DAF Units, and Equalization Tanks, this rule requires either a floating roof or a closed-vent system and a control device. This rule does not apply to the Aeration Tanks or any downstream treatment processes.
- Subpart CC of 40 CFR part 63, as discussed in Section 3.3.13 herein, requires compliance with the requirements of subpart FF of 40 CFR part 61.

4.9.1.2 Step 1 – Identify All Control Options

Identified control techniques for minimizing VOC emissions from wastewater collection and treatment include water seal controls on drains; wastewater stripping; floating roofs for treatment vessels; and carbon adsorption and incineration for removal of VOC from vent streams.

4.9.1.3 Step 2 – Eliminate Technically Infeasible Control Options

Wastewater stripping, floating roofs, and oxidation (*i.e.*, incineration) are technically infeasible for application to wastewater drains. All identified control technologies are technically feasible for application to the wastewater treatment operations.

4.9.1.4 Step 3 – Characterize Control Effectiveness of Technically Feasible Control Options

The most effective strategy for the wastewater collection system involves the use of closed vent systems and dual carbon canisters for all drains. Water seal controls are a less effective control option.

The most effective control strategy for the wastewater treatment plant vessels comprises the following:

- Wastewater stripping in order to minimize the VOC concentration of wastewater entering the API Separators;
- Floating roofs for the Equalization Tanks;
- Closed-vent systems and oxidation of the VOC-containing vent streams from the API Separators, Primary DAF Units, and Aeration Tanks.

The second most effective control strategy involves the same equipment configuration as in the most effective option, but without the closed vent system and oxidation system for the Aeration Tanks. This is the control strategy proposed for the wastewater treatment plant at the HEC petroleum refinery. A catalytic oxidation system will be used to control VOC emissions in the vent streams from the API Separators and the Primary DAF Units.

Less effective options are those that would omit the wastewater stripper, or use floating roofs rather than closed vent systems and oxidation systems for the API Separators and Primary DAF Units.

4.9.1.5 Step 4 – Evaluate More Effective Control Options

The proposed equipment configuration for the wastewater treatment plant represents the second most effective control strategy identified. This control strategy will result in adverse energy impacts, due to the use of natural gas in the catalytic oxidizer, and adverse environmental impacts, due to the combustion of natural gas and the oxidation of ammonia to form NO_X in the catalytic oxidizer. This control option will cause adverse economic impacts due to the costs of installing and operating the various control technologies, including the wastewater stripper. None of these adverse impacts has a significant effect on the BACT decision.

Under the proposed equipment configuration, each of the two Aeration Tanks will be uncontrolled and will emit approximately 1.8 tons of VOC per year. The use of a closed vent system and oxidation system to control the VOC emissions from the Aeration Tanks is technically feasible. Relative to the proposed control strategy, this more effective control option would result in beneficial environmental impacts, namely a reduction of approximately 3.6 tons VOC emissions per year. It would result in slight adverse energy and environmental impacts associated with the combustion of approximately 7 million cubic feet per year additional natural gas. As shown in Appendix D to this permit application, this more effective control strategy would also result in adverse economic impacts associated with incremental capital cost of approximately $300,000 and incremental annual costs (including capital recovery) of approximately $100,000. The incremental cost effectiveness of this control strategy relative to

the proposed control strategy is $28,000 per ton of VOC emissions reduced. These are unreasonable, adverse economic impacts and, in light of the minimal environmental benefit and the slight, adverse energy and environmental impacts, warrant rejection of this control strategy as BACT.

4.9.1.6 Step 5 – Establish BACT

The emission limits representing BACT for VOC emissions from the wastewater collection and treatment systems at the HEC petroleum refinery are as follows:

- For each wastewater collection system drain having a vent, an equipment design standard requiring a closed vent system and dual carbon canisters meeting the requirements at 40 CFR § 61.349.
- An equipment design standard requiring the use of a wastewater stripper to limit the benzene concentration of wastewater entering the API Separators to a flow-weighted annual average of 10 ppm by weight.
- For each Equalization Tank, an equipment design standard requiring a floating roof meeting the requirements of 40 CFR § 61.351.
- For each API Separator and each Primary DAF Unit, an equipment design standard requiring the use of a closed vent system and catalytic oxidizer meeting the requirements of 40 CFR § 61.349.

RTP is not aware of any petroleum refinery wastewater treatment plant subject to more stringent VOC emission standards.

4.9.2 Nitrogen Oxides Emissions

As described in Section 4.9.1 herein, a catalytic oxidizer will be used to control VOC emissions from the API Separators and the Primary DAF Units at the HEC petroleum refinery wastewater treatment plant. This catalytic oxidizer will be a source of NO_X emissions due to thermal NO_X formation and, to a greater extent, due to oxidation of ammonia present in the vent streams from these vessels.

4.9.2.1 BACT Baseline

There are no applicable NSPS or NESHAP rules that would establish a BACT baseline for NO_X emissions from the catalytic oxidizer.

4.9.2.2 Step 1 – Identify All Control Options

Identified control techniques for minimizing NO_X emissions from the wastewater treatment system include the use of a VOC control strategy that does not involve incineration and the use of SCR to control NO_X emissions. A description of SCR technology is provided in Section 4.15.1 herein.

4.9.2.3 Step 2 – Eliminate Technically Infeasible Control Options

Both identified control technologies are technically feasible for application to the wastewater treatment operations.

4.9.2.4 Step 3 – Characterize Control Effectiveness of Technically Feasible Control Options

The most effective strategy for the wastewater collection system involves the use of a VOC control strategy that does not involve incineration to control VOC emissions. The second most effective control strategy involves the application of SCR to control NO_X emissions from the catalytic oxidizer.

4.9.2.5 Step 4 – Evaluate More Effective Control Options

The most effective control strategy would cause significant, adverse environmental impacts associated with the reduction in effectiveness for controlling VOC emissions, including emissions of HAP such as benzene. These adverse impacts render the most effective control strategy unacceptable.

4.9.2.6 Step 5 – Establish BACT

The emission limit representing BACT for NO_X emissions from the catalytic oxidizer is a NO_X emission rate of 5.0 lbs per hour. RTP is not aware of any petroleum refinery wastewater treatment plant subject to more stringent NO_X emission standards.

4.10 Equipment Leaks

The proposed HEC petroleum refinery and IGCC power plant includes piping and a large number of connectors, valves, pumps, compressors, and similar components for movement of gas and liquid raw materials, intermediates, and feedstocks. These components are potential sources of VOC and H_2S emissions due to leakage from rotary shaft seals, connection interfaces, valve stems, and similar points.

4.10.1 Volatile Organic Compounds Emissions

4.10.1.1 BACT Baseline

Control strategies for VOC emissions from equipment leaks are based on comprehensive work practices commonly known as leak detection and repair (LDAR) programs. The baseline requirements for the LDAR program applicable to the proposed petroleum refinery are set forth in 40 CFR 63 subparts H and CC, discussed in Sections 3.3.10 and 3.3.13 herein. These include requirements for monitoring to detect leaks, and attempting and completing repairs of leaking components in the following categories:

- Pumps in light liquid service;
- Compressors;
- Pressure relief devices in gas/vapor service;
- Sampling connection systems;
- Open-ended valves or lines;
- Valves in gas/vapor service and in light liquid service;
- Pumps, valves, connectors, and agitators in heavy liquid service;

- Instrumentation systems;
- Pressure relief devices in liquid service;
- Surge control vessels and bottoms receivers; and
- Closed-vent systems and control devices.

There are no applicable NSPS or NESHAP requirements that would establish a BACT baseline for VOC emissions from equipment leaks within the proposed IGCC power plant at the HEC.

4.10.1.2 Step 1 – Identify All Control Options

Potential enhancements to the baseline LDAR program work practice requirements include the following:

- Lower definition of a "leaking" component threshold concentration, as measured at the potential leak interface. This has the effect of accelerating or broadening the repair obligations for leaking components to include components that would not require repair under the NESHAP rules.
- Increase leak monitoring frequencies, which has the effect of accelerating the identification and repair of leaking components.

In addition, as part of an effective LDAR program, equipment specifications and maintenance practices are designed and implemented to reduce the occurrence of leaks. For certain service applications, components with inherently leakless design features are available. These components reduce VOC emissions, regardless of the quality or frequency of LDAR activities. Some refinery permits have specified the use of leakless designs in applications where such use is practicable. These leakless designs include the following:

- Canned, magnetic drive, or diaphragm pumps not having external seals;
- Pumps with double mechanical seals and a barrier fluid.
- Magnetic-drive centrifugal pumps, with no direct coupling between the drive and the pump casing, and consequently no rotating shaft seal. The pump is driven by magnetic coupling of strong permanent magnets attached to the drive motor and similar permanent magnets incorporated into the impeller of the pump.
- Diaphragm valves;
- Bellows valves with the bellows welded to both the bonnet and stem.
- Connectors welded around the complete circumference such that the joint cannot be disassembled by unbolting or unscrewing the components.

Finally, in addition to enhanced work practice requirements and as an alternative to equipment specifications, some facilities have been subjected to enforceable limits on the number of leaking components.

4.10.1.3 Step 2 – Eliminate Technically Infeasible Control Options

All of the identified control options are technically feasible.

4.10.1.4 Step 3 – Characterize Control Effectiveness of Technically Feasible Control Options

The most effective of of the identified control strategies is a combination of the identified control options. Specifically, this includes an LDAR program with enhanced work practices relative to the NESHAP, plus enforceable limits on percent leaking components.

Other control strategies not involving all of these enhanced work practices, or not including enforceable limits on leaking components, would be less effective.

4.10.1.5 Step 4 – Evaluate More Effective Control Options

The most effective identified control strategy for VOC emissions from equipment leaks is proposed as BACT. This system will not result in any adverse energy or environmental impacts. Accordingly, no evaluation of alternative control options is warranted.

4.10.1.6 Step 5 - Establish BACT

The proposed BACT for VOC emissions from equipment leaks at the HEC covers both the petroleum refinery and the IGCC power plant. The proposed program includes all requirements of 40 CFR 63 subparts H and CC, which are applicable to the petroleum refining process units but not otherwise applicable to the IGCC power plant, and the following additional provisions:

- Leak definitions of 100 ppmv for valves and connectors in gas/vapor and light liquid service and 500 ppmv for all other components;
- Inclusion of flanges and screwed connectors in the LDAR program;
- Eliminating the provisions for designating pumps in light liquid service as "unsafe to monitor" and for monitoring these pumps with less frequency than other pumps;
- Eliminating the provisions providing for reduced monitoring frequency for valves in gas/vapor service or light liquid service;
- Underground process pipelines will contain no buried valves such that fugitive emission monitoring is rendered impractical;
- Requirements for a first attempt at repair of all leaking components within 24 hours;
- Generally requiring successful repair of leaking components in VOC service within 7 days, with delays subject to enforceable limitations on leaking components as described below; and
- Delay of repair for equipment in VOC service will be allowed only if such delay would not cause the percent leaking components to exceed any of the following:
    - 1.0 percent of the total number of pumps in light liquid service and compressors on a source-wide basis;
    - 1.0 percent of the total number of pressure relief devices on a source-wide basis;
    - 0.3 percent of the total number of connectors in gas/vapor service and connectors in light liquid service on a source-wide basis; and
    - 0.3 percent of the total number of valves in gas/vapor service and valves in light liquid service, determined on a source-wide basis.

These proposed emission limits are substantially more stringent than the BACT baseline discussed in Section 4.10.1.1 and are as stringent as any limits imposed on or achieved by any petroleum refinery or IGCC power plant of which RTP is aware.

4.10.2 Hydrogen Sulfide

4.10.2.1 Steps 1 - 4

Available control options for H_2S emissions from equipment leaks BACT include leakless equipment design, LDAR, and continuous instrumental ambient concentration monitoring. Continuous instrumental ambient concentration monitoring around the perimeter of the process units containing equipment in H_2S service is the most effective control option identified.

4.10.2.2 Step 5 – Establish BACT

The proposed BACT for H_2S emissions from equipment leaks at the HEC is an ambient H_2S monitoring network with monitors surrounding the process units containing equipment in H_2S service. Monitors will be set to alarm at a concentration no higher than 0.03 ppmv. The proposed requirements would apply to both the petroleum refinery and the IGCC power plant at the HEC.

In addition to the ambient monitoring required as BACT, RTP notes that the proposed HEC refinery also will be subject to the Process Hazard Analysis requirements under 29 CFR § 1910.119(e). Specifically, pursuant to 29 CFR 1910.119(e)(3)(iii), the analysis is required to address "Engineering and administrative controls applicable to the hazards and their interrelationships such as appropriate application of detection methodologies to provide early warning of releases. (Acceptable detection methods might include process monitoring and control instrumentation with alarms, and detection hardware such as hydrocarbon sensors.)"

In order to meet these worker safety and health requirements, the proposed refinery will be required to implement an on-site H_2S concentration monitoring program, or equivalent, within the process unit areas containing equipment in H_2S service. This monitoring will include frequent olfactory and visual checks for H_2S leaks in addition to that required by the proposed air quality permit.

4.11 Materials Handling

As described in Sections 2.3.1, 2.3.2, and 2.3.7 herein, the HEC will include materials handling operations for petroleum coke, coal, flux, and slag. These materials handling operations include both fugitive and non-fugitive (*i.e.*, stack) particulate matter emissions. Fugitive emissions are those that cannot reasonably be discharged to the atmosphere through a vent, flue, or stack. All other emissions are non-fugitive.

4.11.1 Non-Fugitive Particulate Matter Emissions

4.11.1.1 BACT Baseline

As discussed in Section 3.2.8 herein, the coal preparation plant at the proposed HEC IGCC power plant will be subject to the visible emissions standard under subpart Y of 40 CFR part 60. This standard prohibits visible emissions of 20 percent opacity or greater from both fugitive and non-fugitive emissions sources. This is the least stringent limit that would meet BACT requirements for the coal unloading, conveying, storage, and crushing facilities.

As discussed in Section 3.2.16 herein, all emissions units associated with flux processing at the proposed HEC IGCC power plant, with the exception of the railcar unloading operation and the the transfer from belt conveyor to storage pile, will be affected facilities subject to the provisions of 40 CFR part 60 subpart OOO. All of these emissions units will be enclosed within the flux unloading building and the flux and slag storage building. Pursuant to 40 CFR § 60.672(a) and (e) of subpart OOO, vents on these buildings are subject to a PM concentration limit of 0.05 grams per dry standard cubic meter and a visible emissions standard limiting emissions to 7 percent opacity. These are the least stringent emission limits that would meet BACT requirements for the vents on the flux unloading building and the flux and slag storage building.

The petroleum coke handling operations are not subject to any particulate matter emission standards that would establish a BACT baseline.

4.11.1.2 Step 1 – Identify All Control Options

For all non-fugitive particulate matter emissions from materials handling operations, the identified control options are the use of fabric filters, including fabric filter baghouses or equivalent "bin vent" filter systems, or maintaining high moisture levels in the materials being handled in order to minimize dust generation.

4.11.1.3 Step 2 – Eliminate Technically Infeasible Control Options

All of the identified control options are technically feasible.

4.11.1.4 Step 3 – Characterize Control Effectiveness of Technically Feasible Control Options

The most effective of the identified control options is the use of fabric filters. Other control options, relying on work practices, are less effective.

4.11.1.5 Step 4 – Evaluate More Effective Control Options

The most effective identified control strategy for non-fugitive particulate matter emissions from materials handling operations is the use of fabric filters. This control option is proposed as BACT and will not result in any adverse energy or environmental impacts. Accordingly, no evaluation of alternative control options is warranted.

4.11.1.6 Step 5 – Establish BACT

The proposed BACT emission limit for particulate matter emissions from sources of non-fugitive emissions is an exhaust gas PM concentration of 0.005 grains per dry standard cubic foot, based on the use of fabric filters. This PM limit will serve as a surrogate for PM-10 emissions as well, because the control technologies for PM and PM-10 emissions are the same and because no condensible PM-10 emissions are expected from these ambient temperature processes. The proposed emission limit is applicable to as many seven exhaust points: Four vents on the coke storage building, one vent on the flux unloading building, one vent on the slag loading building, and one vent on the coal/coke unloading building. The first six of these will exist under either configuration of the IGCC power plant. The coal/coke unloading building will exist only if the maximum coke design case, as described in Section 2.1.2 herein, is chosen for the IGCC power plant.

4.11.2 Fugitive Particulate Matter Emissions

4.11.2.1 BACT Baseline

As discussed in Section 3.2.8 herein, the coal preparation plant at the proposed HEC IGCC power plant will be subject to the visible emissions standard under subpart Y of 40 CFR part 60. This standard prohibits visible emissions of 20 percent opacity or greater from both fugitive and non-fugitive emissions sources. This is the least stringent limit that would meet BACT requirements for the coal unloading, conveying, storage, and crushing facilities.

As discussed in Section 3.2.16 herein, all emissions units associated with flux processing at the proposed HEC IGCC power plant, with the exception of the railcar unloading operation and the the transfer from belt conveyor to storage pile, will be affected facilities subject to the provisions of 40 CFR part 60 subpart OOO. All of these emissions units will be enclosed within the flux unloading building and the flux and slag storage building. Pursuant to 40 CFR § 60.672(e)(1) of subpart OOO, visible fugitive emissions from these buildings are prohibited. This is the least stringent emission limit that would meet BACT requirements for the vents on the flux unloading building and the flux and slag storage building.

The petroleum coke handling operations are not subject to any particulate matter emission standards that would establish a BACT baseline.

4.11.2.2 Step 1 – Identify All Control Options

For all fugitive particulate matter emissions from materials handling operations, the identified control options are as follows:

- The use of enclosures vented to an air pollution control device, which would have the effect of making these emissions non-fugitive;
- Using wind screens in order to minimize wind entrainment of dust; and
- Maintaining high moisture levels in the materials being handled in order to minimize dust generation.

4.11.2.3 Step 2 – Eliminate Technically Infeasible Control Options

Wherever feasible, including most of the materials handling operations at the HEC IGCC power plant, the use of buildings or enclosures with emissions vented to an air pollution control device has been specified as BACT. The resulting non-fugitive emissions are discussed in Section 4.11.1 herein. For the remaining emissions, enclosure and capture are not technically feasible. The other identified control options are technically feasible.

4.11.2.4 Step 3 – Characterize Control Effectiveness of Technically Feasible Control Options

The most effective control strategy for fugitive particulate matter emissions from materials handling operations involves the combined use of all identified control options. For handling of petroleum coke produced at the HEC petroleum refinery, elevated moisture levels will be maintained for all processing operations from the coke drum until when the coke enters the coke storage building. The coke pit will be surrounded by walls on all sides. Rail unloading of petroleum coke, coal, and flux and loading of slag will be performed in buildings so that wind and fugitive emissions are minimized.

4.11.2.5 Step 4 – Evaluate More Effective Control Options

The most effective identified control strategy is proposed as BACT and will not result in any adverse energy or environmental impacts. Accordingly, no evaluation of alternative control options is warranted.

4.11.2.6 Step 5 – Establish BACT

The proposed BACT emission limits for materials include opacity limits and work practices:

- The coke pit will be constructed with walls on all sides.
- Water sprays will be utilized as necessary to maintain the coke moisture content above 10 percent for coke handling operations occurring at the coke pit. Because the coke is cut using water, it will inherently have a high moisture content without water sprays during the initial processing steps. Water sprays will not be used when such use would be unsafe for workers due to sub-freezing temperatures.
- Rail unloading of petroleum coke, coal, and flux and loading of slag will be performed in buildings.
- The coke storage building, coke/coal unloading building, flux unloading building, and slag loading building will be operated with no visible emissions.

4.12 Gasifier Startup Burners

When a gasifier is started up or restarted, the temperature in the vessel must be slowly raised to gasification temperature in order to avoid damaging the gasifier vessel refractory. This is accomplished by firing natural gas in a burner in the top of the gasifier vessel. The maximum heat release of the startup burner is 18 MMBtu/hr. The combustion gases from the startup burner are educted through the vessel using steam and are routed to a startup vent stack.

Each gasifier has a dedicated burner and eduction system, and all eduction systems will be routed to a common vent stack. This BACT analysis covers the common vent stack and all of the startup burners that it serves. As described in Section 2.3.4 herein, the HEC IGCC power plant will include as many as eight gasifiers in the maximum coke design case. These burners will be used infrequently; in the maximum coke design case, the total operating time for all startup burners is 204 hours per year. The annual average heat input rate for the system as a whole is 0.42 MMBtu/hr.

4.12.1 NO_X, CO, and VOC Emissions

4.12.1.1 BACT Baseline

The gasifier startup burners are not subject to any NO_X, CO, or VOC emissions limitations or standards that would establish a BACT baseline.

4.12.1.2 Step 1 – Identify All Control Options

The identified control options for reducing NO_X, CO, and VOC emissions from the gasifier startup burners are the same as those addressed in Section 4.2.1 and 4.2.3 for process heaters firing refinery fuel gas.

4.12.1.3 Step 2 – Eliminate Technically Infeasible Control Options

All of the add-on control options identified in Sections 4.2.1 and 4.2.3 are technically infeasible for application to the gasifier startup burners. This is due primarily to the operating schedule of these burners – the maximum total operating time for all burners will be 204 hours per year, or approximately two percent of total hours. All add-on air pollution control technologies identified for control of NO_X, CO, and VOC emissions from combustion of gaseous fuels require minimum, stable temperatures. The infrequent and transient operation of the startup burners will not meet these requirements. In addition, the use of steam to educt the combustion gases through the gasifier vessels cools the gases to a temperature of approximately 236 ^{o}F, so a reheat system designed to use significant quantities of supplemental fuel would have to be designed into the eduction system in order to meet the temperature requirements of SCR or oxidation catalyst for even short periods.

4.12.1.4 Step 3 & 4 – Characterize Control Effectiveness of Technically Feasible Control Options

The only technically feasible control options for NO_X, CO, and VOC emissions from the gasifier startup burners are good combustion practices and the use of low-NO_X burners. No data are available to characterize the emissions reductions achievable with these control techniques when applied to gasifer startup burner operation in an IGCC power plant. These technically feasible control options will not result in any adverse energy, economic, or environmental impacts.

4.12.1.5 Step 5 – Establish BACT

RTP proposes the following equipment design and work practice requirements as BACT for NO_X, CO, and VOC emissions from the gasification startup burners at the HEC IGCC power plant:

- Adherence to good combustion practices for the control of CO and VOC emissions; and
- Use of low-NO_X burners for the control of NO_X emissions.

Establishment of equipment design and work practice requirements as BACT is appropriate in this instance because it is infeasible to apply a measurement methodology for demonstration of compliance with numeric limits on emissions rates. The operating schedule for these emissions units make manual stack testing technically infeasible, and the infrequent operation and very low annual emissions rates render continuous emissions monitoring systems economically infeasible.

4.12.2 Sulfur Dioxide, Sulfuric Acid Mist, and Particulate Matter Emissions

4.12.2.1 BACT Baseline

The gasifier startup burners are not subject to any emissions limitations or standards that would establish a BACT baseline for any pollutant.

4.12.2.2 Steps 1-4

There are no identified control options for gasifier startup burners fired with natural gas.

4.12.2.3 Step 5 – Establish BACT

RTP proposes the use of pipeline-quality natural gas as BACT for emissions of SO_2, sulfuric acid mist, and particulate matter from the gasifier startup burners at the HEC IGCC power plant. Establishment of a fuel specification as BACT is appropriate in this instance because it is infeasible to apply a measurement methodology for demonstration of compliance with numeric limits on emissions rates. The operating schedule for these emissions units make manual stack testing technically infeasible, and the infrequent operation and very low annual emissions rates render continuous emissions monitoring systems economically infeasible.

4.13 Gasification Flare

As described in Section 2.3.4 herein, the HEC IGCC power plant will include an elevated flare connected to a pressure relief system. This system will be used for safe disposal of off-specification syngas that is produced during unit startups and malfunctions and that cannot be routed to the combined cycle gas turbines, the PSA unit, or to another gasifier. The gasifiers and syngas clean up systems are designed so that only clean syngas is flared. The relief vapors will be combusted at the elevated flare and the combustion products safely discharged to the atmosphere.

This portion of the BACT analysis pertains only to the flaring of syngas. Other combustion of syngas, such as in refinery process heaters, is covered by Sections 4.15 and 4.16 herein.

4.13.1 CO, VOC, and H_2S Emissions

4.13.1.1 BACT Baseline.

There are no applicable NSPS or NESHAP rules that would establish baseline emission rates for CO, VOC, or H_2S emissions from the gasification flare at the HEC petroleum refinery.

4.13.1.2 Steps 1-4

The identified control options for minimizing emissions from the gasification flare are work practices and equipment design elements that will minimize use of the flare and will minimize emissions from the flare during flaring events:

- Minimizing the combustion of off-specification syngas by modifying startup and shutdown procedures and by designing the gasification block to allow most off-specification gas streams to be fed to the inlet of a gasifier;
- Designing the flare to meet limitations on maximum exit velocity; and
- Designing the flare to meet minimum net heating value requirements for fuel gas combusted in the flares.

Each of these control options is technically feasible and is inherent in the design of the proposed HEC IGCC power plant. This control strategy will not result in any adverse energy or environmental impacts.

4.13.1.3 Step 5 – Establish BACT

The proposed BACT emission limits for CO, VOC, and H_2S emissions from the gasification flare at the HEC refinery are work practices and equipment design standards. These emission limits are as follows:

- The IGCC power plant shall include a flare gas recovery system. The system shall be designed to recover routine vent gases and route these gases to the gasification process to the extent practicable.
- The IGCC power plant shall minimize flaring resulting from startups, shutdowns, and emergency malfunctions by operating at all times in accordance with an approved flare minimization plan. The plan shall include the following elements:
    - Procedures for operating and maintaining the flare and flare gas recovery systems during periods of startup, shutdown, and malfunction.
    - A program of corrective action for malfunctioning equipment in the IGCC power plant.
    - Procedures to minimize discharges either directly to the atmosphere or to the flare gas system during the planned and unplanned startup or shutdown of IGCC power plant equipment.
- The flare system shall be equipped with continuous natural gas or nitrogen purge, wherein these gases continuously flush syngas up the flare stack column to be ignited at the top by a continuous pilot flame. This operation keeps the flare ready to immediately receive and safely combust released gases, without relying on pilot ignition. The pilot is

continually monitored to confirm pilot operation and to affect a restart of the pilot if necessary.

- The flares shall be designed to meet limitations on maximum exit velocity, as set forth in the NSPS general provisions at 40 CFR § 60.18.
- The flares shall be designed to meet minimum net heating value requirements for fuel gas combusted in the flares, as set forth at 40 CFR § 60.18.

Establishment of equipment design and work practice requirements as BACT is appropriate in this instance because it is infeasible to apply a measurement methodology for demonstration of compliance with numeric limits on emissions rates. The configuration of the elevated flare system renders both manual stack testing and continuous emissions monitoring systems technically infeasible.

RTP is not aware of any more stringent requirements for gasification flares at any IGCC power plant or any other facility employing solid fuel gasification.

4.13.2 SO_2 Emissions

The flare that will be used to safely dispose of non-routine releases of off-specification syngas and to meet BACT requirements for emissions of CO, VOC, and H_2S from these releases will be a source of SO_2 emissions.

4.13.2.1 BACT Baseline.

Based on the proposed standards under subpart Ja of 40 CFR part 60, the least stringent permit terms that would meet BACT requirements for SO_2 emissions from the gasification flare at the HEC IGCC power plant are the following work practice requirements:

- A prohibition on routine releases of fuel gas to a flare from any fuel gas producing unit. This prohibition would not apply to the combustion in a flare of process upset gases or fuel that that is released to the flare as a result of relief valve leakage or other emergency malfunctions;
- A requirement for developing a written startup, shutdown, and malfunction plan that describes, in detail, procedures for operating and maintaining each fuel gas producing unit during periods of startup, shutdown, and malfunction; and
- A program of corrective action for malfunctioning process, air pollution control, and monitoring equipment associated with the above requirements.

4.13.2.2 Step 1 – Identify All Control Options

The identified control options for reducing emissions from the gasification flare include all of the following:

- All of the control options identified in Section 4.2.2, for SO_2 emissions from process heaters firing refinery fuel gas;
- All of the work practices and equipment design specifications identified in Section 4.13.1;

- The IGCC power plant could be designed and operated without a flare, with off-specification syngas released directly to atmosphere.

4.13.2.3 Step 2 – Eliminate Technically Infeasible Control Options

Operation of the IGCC power plant without a gasification flare for safe disposal of nonroutine releases of off-specification syngas is considered technically infeasible because it would allow uncombusted CO, VOC, and H_2S to be emitted to the atmosphere. The gasification flare is necessary to ensure safe operation of the IGCC power plant.

Options for syngas cleanup identified in Section 4.2.2.1, including both chemical absorption and physical absorption, are technically feasible. Flue gas desulfurization techniques identified in Section 4.2, for emissions from process heaters firing refinery fuel gas, are technically infeasible for application to the gasification flare. The inherent design and operation of emergency flares, with widely varying operational levels involving an open flame above a 350-foot stack, do not allow for the use of any add-on air pollution control equipment.

4.13.2.4 Steps 3 & 4

The most effective control strategy for SO_2 emissions from the gasification flare at the HEC IGCC power plant is a combination of the work practices and equipment design elements identified in Section 4.13.1 in conjunction with syngas cleanup by physical absorption in order to achieve a sulfur level of 40 ppmv or less, based on an hourly average. No data are available to characterize the emission reduction achievable with this control strategy.

4.13.2.5 Step 5 – Establish BACT

The proposed BACT emission limits include the work practices and equipment design elements listed in Section 4.3.1.3 as well as a maximum sulfur level of 40 ppmv, based on an hourly average, in flared off-specification syngas. The sulfur restriction shall not apply during the shakedown period comprising the first six months of IGCC power plant operation.

RTP is not aware of any more stringent requirements for gasification flares at any IGCC power plant or any other facility employing solid fuel gasification.

4.13.3 NO_X, PM, and PM-10 Emissions

The gasification block at the HEC IGCC power plant will not emit NO_X, PM, or PM-10. However, the flare that will be used to safely dispose of non-routine releases of off-specification syngas and to meet BACT requirements for emissions of CO, VOC, and H_2S from these releases will be a source of NO_X, PM, and PM-10 emissions.

4.13.3.1 BACT Baseline.

There are no applicable NSPS or NESHAP rules that would establish a baseline emission rate for NO_X, PM, or PM-10 emissions from the gasification flare at the HEC IGCC power plant.

4.13.3.2 Step 1 – Identify All Control Options

The identified control options for reducing emissions from the gasification flare include all of the following:

- All of the control options identified in Section 4.2, for emissions from process heaters firing refinery fuel gas;
- All of the work practices and equipment design specifications identified in Section 4.13.1;
- The IGCC power plant could be designed and operated without a flare, with off-specification syngas released directly to atmosphere.

4.13.3.3 Step 2 – Eliminate Technically Infeasible Control Options

Operation of the IGCC power plant without a gasification flare for safe disposal of nonroutine releases of off-specification syngas is considered technically infeasible because it would allow uncombusted CO, VOC, and H_2S to be emitted to the atmosphere. The gasification flare is necessary to ensure safe operation of the IGCC power plant.

All of the control options identified in Section 4.2 for NO_X and particulate matter emissions from process heaters firing refinery fuel gas are technically infeasible for application to the gasification flare. The inherent design and operation of emergency flares, with widely varying operational levels involving an open flame above a 350-foot stack, do not allow for the use of low-NO_X burners or any add-on air pollution control equipment.

4.13.3.4 Steps 3-5

The most effective control strategy for NO_X, PM, and PM-10 emissions from the gasification flare at the HEC IGCC power plant are the work practices and equipment design elements identified in Section 4.13.1.2. The proposed BACT emission limits for these pollutants are those listed in Section 4.13.1.3.

Establishment of equipment design and work practice requirements as BACT is appropriate in this instance because it is infeasible to apply a measurement methodology for demonstration of compliance with numeric limits on emissions rates. The configuration of the elevated flare systems renders both manual stack testing and continuous emissions monitoring systems technically infeasible.

RTP is not aware of any more stringent requirements for gasification flares at any IGCC power plant or any other facility employing solid fuel gasification.

4.14 Carbon Dioxide Vent

4.14.1 CO Emissions

4.14.1.1 BACT Baseline

There are no applicable NSPS or NESHAP rules that would establish a baseline emission rate for CO emissions from the gasification process or the Rectisol® wash process at the HEC IGCC power plant.

Proper equipment design, consistent with the process description provided in Section 2.3.6 herein, is inherent in the HEC IGCC power plant and is considered the baseline for the BACT analysis. The baseline emission level is 20 ppmv, which will result in annual emissions of 25.1 pounds per hour and 110 tons per year.

4.14.1.2 Steps 1-4

The identified control options for CO emissions from the Rectisol® wash process are proper equipment design and operation, thermal oxidation, and catalytic oxidation. Each of the identified control options is technically feasible. The baseline emissions level, represented by a CO concentration of 20 ppmv, is sufficiently low that no further, quantifiable emission reduction would be achieved by applying either catalytic oxidation or thermal oxidation. Therefore, proper equipment design and operation is the basis for the proposed BACT determination.

4.14.1.3 Step 5 – Establish BACT

The proposed CO emission limits representing BACT for the CO_2 vent stream are as follows:

- 20 ppmv, based on an hourly rolling 24-hour average, excluding periods of startup, shutdown, and malfunction; and
- 25.1 pounds per hour, based on a daily rolling 365-day average, with no exclusion for periods of startup, shutdown, or malfunction.

These proposed emission limits are more stringent than any limits imposed on or achieved by any Rectisol® wash process serving a solid fuel gasification system of which RTP is aware.

4.14.2 H_2S Emissions

4.14.2.1 BACT Baseline

There are no applicable NSPS or NESHAP rules that would establish a baseline emission rate for H_2S emissions from the gasification process or the Rectisol® wash process at the HEC IGCC power plant.

Proper equipment design, consistent with the process description provided in Section 2.3.6 herein, is inherent in the HEC IGCC power plant and is considered the baseline for the BACT

analysis. The baseline emission level is 3 ppmv, which will result in annual emissions of 4.2 pounds per hour and 18 tons per year.

4.14.2.2 Steps 1-4

The identified control options for CO emissions from the Rectisol® wash process are proper equipment design and operation, thermal oxidation, and catalytic oxidation. Each of the identified control options is technically feasible. The baseline emissions level, represented by a H_2S concentration of 3 ppmv, is sufficiently low that no further, quantifiable emission reduction would be achieved by applying either catalytic oxidation or thermal oxidation. Therefore, proper equipment design and operation is the basis for the proposed BACT determination.

4.14.2.3 Step 5 – Establish BACT

The proposed H_2S emission limits representing BACT for the CO_2 vent stream are as follows:

- 3 ppmv, based on an hourly rolling 24-hour average, excluding periods of startup, shutdown, and malfunction; and
- 4.2 pounds per hour, based on a daily rolling 365-day average, with no exclusion for periods of startup, shutdown, or malfunction.

These proposed emission limits are more stringent than any limits imposed on or achieved by any Rectisol® wash process serving a solid fuel gasification system of which RTP is aware.

4.15 Combined Cycle Gas Turbines: Maximum Coke Design Case

As described in Section 2.1.2 herein, Hyperion is considering two configurations for the IGCC power plant – a "maximum coke design case" and a "natural gas design case." In the former case, the combustion turbines and heat recovery steam generators will be fed with cleaned syngas and PSA tailgas, both derived from petroleum coke and/or coal. Ultra low sulfur distillate fuel oil will be used as startup and backup fuel, with a maximum of 500 equivalent hours per year for each unit.

4.15.1 Nitrogen Oxides Emissions

Nitrogen oxides are primarily formed in combustion processes in two ways: 1) the reaction of elemental nitrogen and oxygen in the combustion air within the high temperature environment of the combustor (thermal NO_X), and 2) the oxidation of nitrogen contained in the fuel (fuel NO_X). Cleaned syngas contains negligible amounts of fuel-bound nitrogen. Therefore, it is expected that essentially all NO_X emissions from the HEC IGCC combustion turbines will originate as thermal NO_X.

4.15.1.1 BACT Baseline

As discussed in Section 3.2.2 herein, under the maximum coke design case, the combined cycle gas turbines are affected facilities subject to the NO_X emission standard of 1.0 lb per megawatt hour gross energy output, on a 30-day rolling average basis, pursuant to § 60.44Da(e)(1). This is

the highest allowable NO_X emission limit which would meet BACT requirements for the combined cycle gas turbines at the HEC IGCC power plant.

4.15.1.2 Step 1 – Identify NO_X Control Alternatives

The rate of formation of thermal NO_X is a function of residence time, oxygen radicals, and peak flame temperature. The following technologies were considered to be potentially available for the HEC IGCC combined cycle gas turbines:

- Dry low-NO_X combustors (combustion turbines)
- Low-NO_X burners (duct burners)
- Diluent (nitrogen or steam) injection (combustion turbines)
- EMx™
- SCR
- Selective non-catalytic reduction (SNCR)

4.15.1.2.1 Dry Low-NO_X Combustors

Dry low-NO_X combustors control NO_X formation in natural gas-fired combined cycle combustion turbines using staged combustion of the natural gas. This is done by designing the combustors to control both the stoichiometry and temperature of combustion by tuning the fuel and air locally within each individual combustor's flame envelope. Combustor design includes features that regulate the aerodynamic distribution and mixing of the fuel and air. A lean, premixed combustor design mixes the fuel and air prior to combustion. This results in a homogeneous air/fuel mixture, which minimizes localized fuel-rich pockets that produce elevated combustion temperatures and higher NO_X emissions. A lean fuel-to-air ratio approaching the lean flammability limit is maintained, and the excess air serves as a heat sink to lower the combustion temperature, which in turn lowers thermal NO_X formation. A pilot flame is used to maintain combustion stability in this fuel-lean environment.

4.15.1.2.2 Low-NO_X Burners

Low-NO_X burners employ design features, such as air staging or fuel staging, in order to minimize NO_X formation during combustion. Staged-air burner designs achieve NO_X reductions by maximizing the time during which fuel burns in substoichiometric conditions, creating a fuel-rich reducing atmosphere in which N_2 is preferentially formed rather than NO_X. The flame temperature in the initial combustion zone is high due to the low combustion air to fuel ratio, but thermal NO_X formation is limited by the low oxygen concentration. Excess air is introduced in secondary or tertiary combustion zones, typically around the outside of the primary combustion zone, so that complete combustion is achieved through diffusion rather than turbulent mixing.

Staged-fuel burner designs achieve NO_X reductions by separating the combustion zone into two regions. The first is a lean primary region in which the total quantity of combustion air is supplied with a fraction of the fuel. In the second region, the remainder of the fuel is injected and combusted by the oxygen left over from the primary region. This technique inhibits the formation of thermal NO_X by ensuring that primary combustion takes place in the presence of a large excess of oxygen and at substantially lower temperatures than a standard burner. The remaining fuel is introduced around the outside of the primary combustion zone so that complete combustion is achieved through diffusion rather than turbulent mixing.

4.15.1.2.3 Diluent Injection

The addition of an inert diluent such as atomized water or nitrogen into the syngas before combustion, and/or steam or nitrogen injection into the high temperature region of a combustor flame serves to inhibit NO_X formation by reducing the peak flame temperature. This effectively lowers the fuel heat content and, consequently, the combustion temperature, thereby reducing NO_X emissions. A secondary benefit of diluent injection is that it increases the mass flow of the exhaust and, thus, the power output per unit of fuel input also increases.

4.15.1.2.4 EMx™

The EMx™ system (formerly $SCONO_X$™) is an add-on control device that reduces emissions of multiple pollutants. This system is described in detail in Section 4.2.1.3.1 herein.

4.15.1.2.5 SCR

SCR is a well-known technology that achieves post-combustion reduction of NO_X from flue gas by injecting ammonia into the flue gas upstream of a catalytic reactor, where the catalyst promotes a reduction reaction that converts NO_X to molecular nitrogen. The predominant chemical reactions are:

$$4\ NH_3 + 4\ NO + O_2 \rightarrow 4N_2 + 6\ H_2O$$

$$8\ NH_3 + 6\ NO_2 \rightarrow 7\ N_2 + 12\ H_2O$$

4.15.1.2.6 SNCR

SNCR is a well-known post-combustion NO_X control technology in which a reagent, either ammonia or urea, is injected into the exhaust gases to react chemically with NO_X, forming elemental nitrogen and water, without the use of a catalyst. This process is effective in reducing NO_X emissions within specific constraints, requiring uniform mixing of the reagent into the flue gas within a zone of the exhaust path where the flue gas temperature is within a narrow temperature range of approximately 1,700 °F to 2,000 °F. In order to achieve the necessary mixing and reaction, the residence time of the flue gas within this temperature window must be at least one half second. The consequences of operating outside the optimum temperature range are severe – above the upper end of the temperature range, the reagent will be converted to NO_X, and below the lower end of the temperature range, the desired chemical reactions will not proceed and the injected reagent will simply be emitted.

4.15.1.3 Step 2 – Eliminate Technically Infeasible Control Options

4.15.1.3.1 Dry Low-NO_X Burners

Syngas differs from natural gas in heating value, gas composition, and flammability characteristics. No manufacturer currently makes dry low-NO_X burners that can be used for a combustion turbine burning petroleum coke or coal-derived syngas. Existing dry low-NO_X burner technologies available for combustion turbines were designed exclusively for natural gas and will not operate on syngas used in IGCC combustion turbines. Available dry low-NO_X combustors are not technically feasible for this application due to the potential for explosive mixtures in the combustion section due primarily to the high hydrogen content of the syngas.

Combustion turbine vendors are reportedly conducting research and development activities for dry low-NO_X combustors for syngas-fueled combustion turbines, but such combustors are not yet commercially available. Therefore, dry low-NO_X burners are not a technically feasible control option for this application.

4.15.1.3.2 EMx™

The EMx™ system is not considered technically feasible for the 133 MW combined cycle gas turbines at the HEC IGCC power plant. As discussed in Section 4.2.1.3.1 herein, all installed EMx™ / $SCONO_X$™ units are on small, natural gas-fired combustion turbines. The largest of these units is 43 MW, less than one-third the size of the syngas-fired units at the IGCC power plant. This is a critical difference in this instance, because the EMx™ system uses a series of dampers to re-route air streams for catalyst regeneration, and scale-up of these damper systems has not been successfully deployed. Additionally, SCR and oxidation catalyst have been demonstrated to achieve similar emission levels as the EMx™ system, and these technologies have been demonstrated on combustion turbines 133 MW in size and larger.

Thus, there are significant technical differences between the proposed emissions units and those few sources where this technology has been demonstrated in practice. These significant technical differences preclude a determination that the EMx™ system has been demonstrated to function efficiently on sources that are identical or similar to the proposed power plant.

4.15.1.3.3 SNCR

SNCR is not technically feasible for use in combined cycle combustion turbines because there are no flue gas locations that would meet the requisite temperature and residence time characteristics.

4.15.1.4 Step 3 – Characterize Control Effectiveness of Technically Feasible Control Options

The second-ranked control option for each combined cycle unit would involve the use of diluent injection for the combustion turbine and low-NO_X burners for the duct burner. The achievable NO_X emission level with this control option is 15 ppmv during normal operation (*i.e.*, operating on syngas and PSA gas). The achievable NO_X emission level when operating on backup Diesel fuel is 42 ppmv.

The highest-ranked control strategy for each combined cycle unit comprises the use of the same combustion modifications in combination with SCR to achieve a NO_X emission level of 3.0 ppmv during normal operation. This is the control option proposed as BACT for NO_X emissions from the HEC IGCC power plant.

4.15.1.5 Step 4 – Evaluate More Effective Control Options

The highest-ranked control option will cause adverse energy and economic impacts and will yield both beneficial and adverse environmental impacts. The adverse energy impact is due to the electrical requirements of the SCR system operation and to the reduction in energy efficiency attributable to the pressure drop across the SCR catalyst grid. The adverse energy impacts are relatively minor and are not a significant factor in the BACT decision.

The adverse environmental impacts attributable to the addition of the SCR system include ammonia emissions and the handling and disposal of a spent catalyst as a solid waste stream. Extensive industry experience with SCR systems indicates that these adverse environmental impacts are not significant.

Finally, although SCR has not been required as BACT for any other IGCC power plant, and it is a costly technology that will cause an adverse economic impact, it is proposed as BACT for the HEC IGCC power plant.

Because the most effective control option is proposed as BACT, detailed analysis of the impacts of other identified control options is not warranted.

4.15.1.6 Step 5 – Establish BACT

The proposed NO_X emission limits are as follows:

- 3.0 ppmv when burning syngas and/or PSA gas, corrected to 15 percent oxygen, based on an hourly rolling three-hour average, excluding periods of startup, shutdown, and malfunction; and
- 6.0 ppmv when burning fuel oil, corrected to 15 percent oxygen, based on an hourly rolling three-hour average, excluding periods of startup, shutdown, and malfunction; and
- 3.0 ppmv, corrected to 15 percent oxygen, based on a daily rolling 365-day average, with no exclusion for periods of startup, shutdown, or malfunction.

These proposed emission limits are substantially more stringent than the BACT baseline discussed in Section 4.13.1.1 and are more stringent than any limits imposed on or achieved by any IGCC power plant of which RTP is aware.

4.15.2 Sulfur Dioxide and Sulfuric Acid Mist Emissions

Emissions of sulfur oxides from any combustion process are primarily dependent upon the sulfur content of the fuel being combusted and the rate of the fuel usage. As described in Section 2.3.4 herein, syngas produced by gasification of petroleum coke or coal contains sulfur in the form of H_2S and, to a lesser extent, other sulfur species such as COS. The combustion of sulfur-bearing fuels such as syngas in the combustion turbines and duct burners will create SO_2 and small amounts of sulfite ion (SO_3) by the oxidation of fuel sulfur. The SO_3 can react with the moisture in the exhaust to form sulfuric acid mist, or H_2SO_4.

4.15.2.1 BACT Baseline

As discussed in Section 3.2.2 herein, under the maximum coke design case, the combined cycle gas turbines are affected facilities subject to the provisions of subpart Da of 40 CFR part 60. In addition, as discussed in Section 3.2.6 herein, the combined cycle gas turbines would be classified as other fuel gas combustion devices under the proposed subpart Ja of 40 CFR part 60 and would be subject to fuel gas sulfur restrictions under that regulation. The highest allowable SO_2 emission limit which would meet BACT requirements for the combined cycle gas turbines at the HEC IGCC power plant is the SO_2 emission standard of 1.4 lb per megawatt hour gross energy output, pursuant to § 60.43Da(i)(1) of subpart Da.

4.15.2.2 Step 1 – Identify SO_2 Control Alternatives

Emissions of sulfur oxides can be controlled either by limiting the sulfur content of the fuel or by scrubbing the exhaust gas. Potentially available control technologies include:

- Syngas cleanup by chemical absorption
- Syngas cleanup by physical absorption
- Specifying ultra low sulfur distillate fuel as backup fuel
- Flue gas desulfurization

4.15.2.2.1 Syngas Cleanup by Chemical Absorption

Chemical absorption is the syngas cleanup technique used by most IGCC power plants. This technique scrubs the syngas with a regenerable solvent such as methyl diethanolamine (MDEA) that bonds chemically with the H_2S. The amine absorber can be coupled with an upstream COS hydrolysis unit, in which COS is converted to H_2S, in order to achieve a higher level of sulfur removal in the amine absorber.

4.15.2.2.2 Syngas Cleanup by Physical Absorption

Physical absorption involves the use of a physical sorbent, such as dimethyl ethers of polyethylene glycol in the Selexol® process or refrigerated methanol in the Rectisol® wash process, to scrub sulfur compounds from syngas. The Rectisol® wash process is proposed for the HEC IGCC power plant and is described in detail in Section 2.3.6.1 herein.

4.15.2.2.3 Specifying Ultra Low Sulfur Distillate Fuel as Backup Fuel

During combined cycle gas turbine unit startups and periods of unavailability of syngas and/or PSA gas, the units will be operated on backup liquid fuel. Emissions of sulfur oxides can be minimized during these periods by specifying the use of ultra low sulfur fuel.

4.15.2.2.4 Flue Gas Desulfurization

Flue gas desulfurization processes operate by contacting the exhaust gas downstream of the combustion zone with an alkaline slurry or solution that absorbs and subsequently reacts with the sulfur oxides. These technologies may be wet, semi-dry, or dry based on the state of the reagent as it is injected or pumped into the absorber vessel. The most common types of systems use non-regenerable, calcium-based reagents or regenerable, sodium-based reagents.

4.15.2.3 Step 2 – Eliminate Technically Infeasible Control Options

All of the identified control options are technically feasible for application to the HEC IGCC power plant.

4.15.2.4 Step 3 – Characterize Control Effectiveness of Technically Feasible Control Options

The Rectisol® wash process proposed for the HEC IGCC power plant can achieve less than 1 ppmv total sulfur level in syngas, representing greater than 99.99 percent sulfur removal. This is the most effective control option.

The Selexol® process is the second most effective control option and can achieve 10 ppmv total sulfur level in syngas, representing greater than 99.9 percent sulfur removal.

Syngas cleanup by chemical absorption using MDEA is the third most effective control option and can achieve less than 40 ppmv total sulfur level in syngas, representing approximately 99.7 percent sulfur removal.

Flue gas desulfurization is the fourth most effective control option. This control technique can achieve as much as 99 percent control of sulfur oxides emissions in some applications, although the achievable efficiency for a flue gas desulfurization system on the dilute exhaust of a combined cycle gas turbine is probably less.

4.15.2.5 Step 4 – Evaluate More Effective Control Options

The highest-ranked control option will cause adverse energy and economic impacts and will yield significant, beneficial environmental impacts. The adverse energy impact is due to the electrical requirements of the Rectisol® wash process. The adverse energy impacts are relatively minor and are not a significant factor in the BACT decision.

Finally, although the Rectisol® wash process has not been required as BACT for any other IGCC power plant, and it is a costly technology that will cause an adverse economic impact, it is proposed as BACT for the HEC IGCC power plant. In addition to providing the greatest possible level of syngas sulfur removal, this technology will provide for CO_2 removal and possible sequestration, as described in Section 2.3.6.1 herein.

Because the most effective control option is proposed as BACT, detailed analysis of the impacts of other identified control options is not warranted.

4.15.2.6 Step 5 – Establish BACT

The proposed emission limits for sulfur oxides from the combined cycle gas turbines at the HEC IGCC power plant under the maximum coke design case are as follows:

- Maximum syngas sulfur level of 1.0 ppmv, based on an hourly rolling 24-hour average, excluding periods of startup, shutdown, and malfunction;
- Maximum fuel oil sulfur level of 15 ppmw; and
- Maximum syngas sulfur level of 1.0 ppmv, based on a daily rolling 365-day average, with no exclusion for periods of startup, shutdown, or malfunction.

These proposed emission limits are substantially more stringent than the BACT baseline discussed in Section 4.13.2.1 and are more stringent than any limits imposed on or achieved by any IGCC power plant of which RTP is aware.

4.15.3 Carbon Monoxide Emissions

Emissions of CO from the combined cycle gas turbines will result from incomplete combustion. Control of CO is typically accomplished by providing adequate fuel residence time and high temperature in the combustion zone to ensure good combustion. These control factors, however,

can also tend to result in increased emissions of NO_X. Conversely, a lower NO_X emission rate achieved through flame temperature control (by diluent injection or dry lean pre-mix) may result in higher levels of CO emissions. Thus, a compromise must be established, whereby the flame temperature reduction is set to achieve the lowest NO_X emission rate possible while keeping CO emissions to an acceptable level.

4.15.3.1 BACT Baseline

There are no applicable NSPS or NESHAP rules that would establish a baseline emission limit for the CO BACT analysis for the combined cycle gas turbines.

4.15.3.2 Step 1 – Identify CO Control Alternatives

The following CO control technologies were considered to be potentially available for the HEC IGCC combined cycle gas turbines:

- Good Combustion Practices
- EMx™
- Oxidation Catalyst

4.15.3.2.1 Good Combustion Practices

Good combustion practices in a combined cycle gas turbine include operational and design elements to control the amount and distribution of excess air in the combustion system in order to ensure that enough oxygen is present for complete combustion.

4.15.3.2.2 EMx™

The EMx™ system (formerly $SCONO_X$™) is an add-on control device that reduces emissions of multiple pollutants. This system is described in detail in Section 4.2.1.3.1 herein.

4.15.3.2.3 Oxidation Catalyst

Oxidation catalyst is a well-known control technology for CO and VOC emissions from combustion sources and has been widely applied on natural gas-fired combined cycle gas turbines. The oxidation of CO to CO_2 utilizes excess air present in the combustion turbine exhaust, and the activation energy required for the reaction to proceed is lowered in the presence of a catalyst. Products of combustion are introduced into a catalytic bed, with the optimum temperature range for these systems being approximately 850 °F to 1,100 °F. No chemical reagent addition is required.

4.15.3.3 Step 2 – Eliminate Technically Infeasible Control Options

The EMx™ system is considered technically infeasible for the HEC IGCC power plant for the reasons presented in Section 4.13.1.3.2 herein.

4.15.3.4 Step 3 – Characterize Control Effectiveness of Technically Feasible Control Options

The most effective control strategy for CO emissions from the combined cycle gas turbines at the HEC IGCC power plant involves the combined use of both technically feasible control

technologies – good combustion practices and oxidation catalyst. Other control strategies, not involving both of these control technologies, would be less effective.

4.15.3.5 Step 4 – Evaluate More Effective Control Options

The control strategy proposed as BACT is the most effective control strategy identified. The use of oxidation catalyst as part of this control strategy will cause slight adverse energy impacts, due to the reduction in energy efficiency attributable to the pressure drop across the oxidation catalyst bed, and slight adverse environmental impacts due to the handling and disposal of a spent catalyst as a solid waste stream. These adverse impacts are relatively minor and are not a significant factor in the BACT decision.

Finally, although oxidation catalyst has not been required as BACT for any other IGCC power plant, and it is a costly technology that will cause an adverse economic impact, it is proposed as part of the CO BACT control strategy for the HEC IGCC power plant.

4.15.3.6 Step 5 - Establish BACT

The proposed CO emission limits are as follows:

- 3.0 ppmv, corrected to 15 percent oxygen, based on an hourly rolling three-hour average, excluding periods of startup, shutdown, and malfunction; and
- 3.0 ppmv, corrected to 15 percent oxygen, based on a daily rolling 365-day average, with no exclusion for periods of startup, shutdown, or malfunction.

These proposed emission limits are more stringent than any limits imposed on or achieved by any IGCC power plant of which RTP is aware.

4.15.4 Volatile Organic Compounds Emissions

Emissions of VOC from the combined cycle gas turbines at the HEC IGCC power plant will occur as a result of incomplete combustion of the hydrocarbon content of syngas and PSA gas fuels.

4.15.4.1 BACT Baseline

There are no applicable NSPS or NESHAP rules that would establish a baseline emission limit for the VOC BACT analysis for the combined cycle gas turbines.

4.15.4.2 Steps 1-4

The identified control technologies for VOC emissions from the HEC IGCC combined cycle gas turbines are the same as the CO control options identified in Section 4.13.3 herein. The only technically feasible control options are good combustion practices and oxidation catalyst. The highest ranked control strategy comprises both of these control technologies used in combination. The adverse energy and environmental impacts of this control strategy are relatively minor and are not a significant factor in the BACT decision.

4.15.4.3 Step 5 - Establish BACT

The proposed VOC emission limits are as follows:

- 0.0017 lb VOC per MMBtu heat input, HHV basis, reported as propane, based on a three-hour average, excluding periods of startup, shutdown, and malfunction.
- 3.0 ppmv CO, corrected to 15 percent oxygen, based on a daily rolling 365-day average, with no exclusion for periods of startup, shutdown, or malfunction.

The long-term CO BACT emission limit is proposed as a surrogate for VOC emissions because the control technologies for both pollutants are the same, so compliance with the CO emission limit will ensure that VOC emissions are minimized to the greatest possible extent, and because continuous monitoring will be provided for CO emissions.

4.15.5 Particulate Matter Emissions

Particulate matter emissions from the combined cycle gas turbines at the HEC IGCC power plant will occur as a result of ash in the syngas and fuel oil, sulfates formed from sulfur in the syngas and fuel oil, particles of carbon and low-volatililty hydrocarbons resulting from incomplete combustion, and inert particulate matter (*i.e.*, dust) in the ambient air used as combustion air.

4.15.5.1 BACT Baseline

As discussed in Section 3.2.2 herein, under the maximum coke design case, the combined cycle gas turbines are affected facilities subject to the provisions of subpart Da of 40 CFR part 60. The highest allowable PM emission limit which would meet BACT requirements for the combined cycle gas turbines at the HEC IGCC power plant is the PM emission standard of 0.14 lb per megawatt hour gross energy output, pursuant to § 60.42Da(c)(1) of subpart Da.

4.15.5.2 Step 1 – Identify Particulate Matter Control Alternatives

Potentially available control technologies for particulate matter emissions from the combined cycle gas turbines at the HEC IGCC power plant include the following:

- Syngas particulate matter removal by wet scrubbing
- Syngas sulfur cleanup by chemical absorption
- Syngas sulfur cleanup by physical absorption
- Specifying ultra low sulfur distillate fuel oil as backup fuel
- Using a NO_X control strategy that excludes SCR
- Using a CO and VOC control strategy that excludes oxidation catalyst

4.15.5.2.1 Syngas Particulate Matter Removal by Wet Scrubbing

As described in Section 2.3.4 herein, the gasification system at the HEC IGCC power plant will include a spray tower wet scrubber for removal of entrained particulate matter in syngas. This particulate matter removal is an inherent and necessary aspect of IGCC process design in order to prevent damage to the combustion turbines. Removal of particulate matter from syngas prior to combustion results in lower particulate matter emissions from the combined cycle gas turbine.

4.15.5.2.2 Syngas Cleanup by Chemical Absorption

Chemical absorption is the most common syngas sulfur removal technique used in IGCC power plants and is discussed in detail in Section 4.13.2 herein. Removal of sulfur from syngas prior to combustion results in decreased sulfate formation and lower particulate matter emissions from the combined cycle gas turbine.

4.15.5.2.3 Syngas Cleanup by Physical Absorption

Physical absorption is the most effective syngas sulfur removal technique available for use in IGCC power plants and is discussed in detail in Sections 2.3.6.1 and 4.13.2 herein. Removal of sulfur from syngas prior to combustion results in decreased sulfate formation and lower particulate matter emissions from the combined cycle gas turbine.

4.15.5.2.4 Specifying Ultra Low Sulfur Distillate Fuel as Backup Fuel

During combined cycle gas turbine unit startups and periods of unavailability of syngas and/or PSA gas, the units will be operated on backup liquid fuel. Emissions of particulate matter can be minimized during these periods by specifying the use of ultra low sulfur distillate fuel oil.

4.15.5.2.5 Using a NO_X Control Strategy that Excludes SCR

Because SCR systems require injection of ammonia into the exhaust gas, and ammonia is a chemically reactive compound that forms particulate salts such as ammonium sulfate and ammonium chloride, using SCR for NO_X control tends to result in slight increases in particulate matter emissions. Eliminating SCR from the NO_X control strategy is, therefore, a particulate matter control strategy.

4.15.5.2.6 Using a CO and VOC Control Strategy that Excludes Oxidation Catalyst

Oxidation catalyst used for control of CO and VOC emissions tends to oxidize sulfur dioxide to sulfur trioxide. Sulfur trioxide is a chemically reactive compound that forms particulate salts such as ammonium sulfate. Therefore, using oxidation catalyst for control of CO and VOC emissions tends to result in slight increases in particulate matter emissions and eliminating oxidation catalyst from the CO and VOC control strategy is a particulate matter control strategy.

4.15.5.3 Step 2 – Eliminate Technically Infeasible Control Options

All of the identified particulate matter control options are technically feasible for application to the HEC IGCC power plant.

4.15.5.4 Step 3 – Characterize Control Effectiveness of Technically Feasible Control Options

The most effective control strategy for particulate matter emissions involves the combined use of syngas particulate matter removal by wet scrubbing, syngas sulfur removal by physical absorption, specifying ultra low sulfur distillate fuel oil as backup fuel, and excluding SCR and oxidation catalyst from the NO_X, CO, and VOC control strategies. The second ranked control strategy would be the same as the first option, but with SCR and oxidation catalyst. Other control strategies would be less effective.

4.15.5.5 Step 4 – Evaluate More Effective Control Options

The highest-ranked control strategy for particulate matter emissions from the combined cycle gas turbines at the HEC IGCC power plant would require that SCR and oxidation catalyst not be used. This control strategy would cause significant, adverse environmental impacts because NO_X, CO, and VOC emissions would increase markedly and negligible reductions in particulate matter emissions would be achieved relative to the second-ranked control strategy.

The second-ranked control strategy will cause insignificant, adverse energy and economic impacts and will yield substantial, beneficial environmental impacts. The adverse impacts are associated with technologies used primarily for control of SO_2, NO_X, CO, and VOC emissions, as discussed in Sections 4.15.1 through 4.15.4 herein, and are not a significant factor in the BACT determination. This control strategy is therefore selected as BACT for particulate matter emissions from the combined cycle gas turbines.

4.15.5.6 Step 5 – Establish BACT

The proposed particulate matter emission limits are as follows:

- 0.022 lb PM-10 per MMBtu heat input, HHV basis, based on a three-hour average, excluding periods of startup, shutdown, and malfunction.

This proposed emission limit is more stringent than the BACT baseline discussed in Section 4.13.5.1 and is as stringent or more stringent than any limits imposed on or achieved by any IGCC power plant of which RTP is aware.

4.16 Combined Cycle Gas Turbines: Natural Gas Design Case

As described in Section 2.1.2 herein, Hyperion is considering two configurations for the IGCC power plant – a "maximum coke design case" and a "natural gas design case." In the latter case, the combustion turbines will be fired with natural gas and the heat recovery steam generators will be fired with PSA gas derived from petroleum coke.

4.16.1 Nitrogen Oxides Emissions

4.16.1.1 BACT Baseline

As discussed in Section 3.2.20 herein, under the natural gas design case, the combined cycle gas turbines at the HEC IGCC power plant are affected facilities subject to the provisions of subpart KKKK of 40 CFR part 60. The highest allowable NO_X emission limits that would meet BACT requirements for the combined cycle gas turbines at the HEC IGCC power plant are the outlet NO_X concentration standards under § 60.4320(a) of subpart KKKK: 15 ppmv during periods when at least 50 percent of heat input is derived from natural gas and 42 ppmv during periods when less than 50 percent of heat input is derived from natural gas, each corrected to 15 percent oxygen, based on a 30-day rolling average, excluding periods of startup, shutdown, and malfunction.

4.16.1.2 Step 1 – Identify NO_X Control Alternatives

The identified control technologies for reducing NO_X emissions from the combined cycle gas turbines are the same under the natural gas design case as under the maximum coke design case.

4.16.1.3 Step 2 – Eliminate Technically Infeasible Control Options

4.16.1.3.1 EMx™

The EMx™ system is not considered technically feasible for the 133 MW combined cycle gas turbines. As discussed in Section 4.2.1.3.1 herein, all installed EMx™ / $SCONO_X$™ units are on small, natural gas-fired combustion turbines. The largest of these units is 25 MW, less than one-fifth the size of the syngas-fired units at the IGCC power plant. This is a critical difference in this instance, because the EMx™ system uses a series of dampers to re-route air streams for catalyst regeneration, and scale-up of these damper systems has not been successfully deployed.

Thus, there are significant technical differences between the proposed emissions units and those few sources where this technology has been demonstrated in practice. These significant technical differences preclude a determination that the EMx™ system has been demonstrated to function efficiently on sources that are identical or similar to the proposed power plant.

4.16.1.3.2 SNCR

SNCR is not technically feasible for use in combined cycle combustion turbines because there are no flue gas locations that would meet the requisite temperature and residence time characteristics.

4.16.1.4 Step 3 – Characterize Control Effectiveness of Technically Feasible Control Options

The second-ranked control option for each combined cycle unit would involve the use of dry low-NO_X burners for the combustion turbine and low-NO_X burners for the duct burner. The achievable NO_X emission level with this control option is 9 ppmv during normal operation (*i.e.*, operating the combustion turbines on natural gas and the duct burners on PSA gas). The achievable NO_X emission level when operating on backup Diesel fuel is 42 ppmv.

The highest-ranked control strategy for each combined cycle unit comprises the use of the same combustion modifications in combination with SCR to achieve a NO_X emission level of 2.0 ppmv during normal operation. This is the control option proposed as BACT for NO_X emissions from the HEC IGCC power plant.

4.16.1.5 Step 4 – Evaluate More Effective Control Options

The highest-ranked control option will cause adverse energy and economic impacts and will yield both beneficial and adverse environmental impacts. The adverse energy impact is due to the electrical requirements of the SCR system operation and to the reduction in energy efficiency attributable to the pressure drop across the SCR catalyst grid. The adverse energy impacts are relatively minor and are not a significant factor in the BACT decision.

The adverse environmental impacts attributable to the addition of the SCR system include ammonia emissions and the handling and disposal of a spent catalyst as a solid waste stream. Extensive industry experience with SCR systems indicates that these adverse environmental impacts are not significant.

Because the most effective control option is proposed as BACT, detailed analysis of the impacts of other identified control options is not warranted.

4.16.1.6 Step 5 - Establish BACT

The proposed NO_X emission limits are as follows:

- 2.0 ppmv when burning natural gas and/or PSA gas, corrected to 15 percent oxygen, based on an hourly rolling three-hour average, excluding periods of startup, shutdown, and malfunction; and
- 6.0 ppmv when burning fuel oil, corrected to 15 percent oxygen, based on an hourly rolling three-hour average, excluding periods of startup, shutdown, and malfunction; and
- 2.0 ppmv, corrected to 15 percent oxygen, based on a daily rolling 365-day average, with no exclusion for periods of startup, shutdown, or malfunction.

These proposed emission limits are at least as stringent as any limits imposed on or achieved by any comparable facility of which RTP is aware.

4.16.2 Sulfur Dioxide and Sulfuric Acid Mist Emissions

Emissions of sulfur oxides from any combustion process are primarily dependent upon the sulfur content of the fuel being combusted and the rate of the fuel usage. Both natural gas and PSA gas burned in the combined cycle power plant under the natural gas design case will include small quantities of sulfur compounds. The combustion of these sulfur-bearing fuels in the combustion turbines and duct burners will create SO_2 and small amounts of sulfite ion (SO_3) by the oxidation of fuel sulfur. The SO_3 can react with the moisture in the exhaust to form sulfuric acid mist, or H_2SO_4.

4.16.2.1 BACT Baseline

As discussed in Section 3.2.6 herein, the combined cycle gas turbines would be classified as other fuel gas combustion devices under the proposed subpart Ja of 40 CFR part 60 and would be subject to fuel gas sulfur restrictions under that regulation. In addition, as discussed in Section 3.2.20 herein, under the natural gas design case, the combined cycle gas turbines at the HEC IGCC power plant are affected facilities subject to the provisions of subpart KKKK of 40 CFR part 60. The highest allowable SO_2 emission limits that would meet BACT requirements for the combined cycle gas turbines at the HEC IGCC power plant are as follows:

- For natural gas and fuel oil, the fuel sulfur standards under § 60.4330(a)(2) of subpart KKKK: No fuel burned in any combined cycle gas turbine may contain total potential sulfur emissions exceeding 0.060 lb SO_2 per MMBtu heat input, excluding periods of startup, shutdown, and malfunction.

- For PSA gas, the proposed fuel sulfur standards under § 60.102a(h)(1) of subpart Ja: No fuel gas burned in an other fuel gas combustion device may contain H_2S exceeding 160 ppmv on a 3-hour rolling average basis or 60 ppmv on a 365-day rolling average basis, excluding periods of startup, shutdown, and malfunction.

4.16.2.2 Step 1 – Identify SO_2 Control Alternatives

The identified control technologies for reducing SO_2 emissions from the combined cycle gas turbines under the natural gas design case include all options identified under the maximum coke design case, as discussed in Section 4.13.2.2 herein, and also specification of pipeline quality natural gas as the primary fuel for the combustion turbines.

4.16.2.3 Step 2 – Eliminate Technically Infeasible Control Options

All of the identified control options are technically feasible for application to the HEC IGCC power plant.

4.16.2.4 Step 3 – Characterize Control Effectiveness of Technically Feasible Control Options

The Rectisol® wash process proposed for the HEC IGCC power plant can achieve less than 1 ppmv total sulfur level in syngas, representing greater than 99.99 percent sulfur removal. The most effective control option includes the Rectisol® wash process for syngas cleanup in combination with pipeline natural gas specification for the natural gas fired in the combustion turbines.

As described in Section 4.13.2.4 herein, other options for control of SO_2 emissions from the combined cycle power plant are less effective than the proposed control option.

4.16.2.5 Step 4 – Evaluate More Effective Control Options

The highest-ranked control option will cause adverse energy and economic impacts and will yield significant, beneficial environmental impacts. The adverse energy impact is due to the electrical requirements of the Rectisol® wash process. The adverse energy impacts are relatively minor and are not a significant factor in the BACT decision.

Finally, although the Rectisol® wash process has not been required as BACT for any other IGCC power plant, and it is a costly technology that will cause an adverse economic impact, it is proposed as BACT for the HEC IGCC power plant. In addition to providing the greatest possible level of syngas sulfur removal, this technology will provide for CO_2 removal and possible sequestration, as described in Section 2.3.6.1 herein.

Because the most effective control option is proposed as BACT, detailed analysis of the impacts of other identified control options is not warranted.

4.16.2.6 Step 5 – Establish BACT

The proposed emission limits for sulfur oxides from the combined cycle gas turbines at the HEC IGCC power plant under the natural gas design case are as follows:

- Maximum PSA tailgas sulfur level of 0.5 ppmv, based on an hourly rolling 24-hour average, excluding periods of startup, shutdown, and malfunction;
- Maximum fuel oil sulfur level of 15 ppmw; and
- Maximum syngas sulfur level of 1.0 ppmv, based on a daily rolling 365-day average, with no exclusion for periods of startup, shutdown, or malfunction.

These proposed emission limits are substantially more stringent than the BACT baseline discussed in Section 4.14.2.1 and are more stringent than any limits imposed on or achieved by any IGCC power plant of which RTP is aware.

4.16.3 Carbon Monoxide Emissions

4.16.3.1 BACT Baseline

There are no applicable NSPS or NESHAP rules that would establish a baseline emission limit for the CO BACT analysis for the combined cycle gas turbines.

4.16.3.2 Step 1 – Identify CO Control Alternatives

The identified control technologies for reducing NO_X emissions from the combined cycle gas turbines are the same under the natural gas design case as under the maximum coke design case.

4.16.3.3 Step 2 – Eliminate Technically Infeasible Control Options

The EMx™ system is considered technically infeasible for the HEC IGCC power plant for the reasons presented in Section 4.13.1.3.2 herein.

4.16.3.4 Step 3 – Characterize Control Effectiveness of Technically Feasible Control Options

The most effective control strategy for CO emissions from the combined cycle gas turbines at the HEC IGCC power plant involves the combined use of both technically feasible control technologies – good combustion practices and oxidation catalyst. Other control strategies, not involving both of these control technologies, would be less effective.

4.16.3.5 Step 4 – Evaluate More Effective Control Options

The control strategy proposed as BACT is the most effective control strategy identified. The use of oxidation catalyst as part of this control strategy will cause slight adverse energy impacts, due to the reduction in energy efficiency attributable to the pressure drop across the oxidation catalyst bed, and slight adverse environmental impacts due to the handling and disposal of a spent catalyst as a solid waste stream. These adverse impacts are relatively minor and are not a significant factor in the BACT decision.

Finally, although oxidation catalyst has not been required as BACT for any other IGCC power plant, and it is a costly technology that will cause an adverse economic impact, it is proposed as part of the CO BACT control strategy for the HEC IGCC power plant.

4.16.3.6 Step 5 - Establish BACT

The proposed CO emission limits are as follows:

- 3.0 ppmv, corrected to 15 percent oxygen, based on an hourly rolling three-hour average, excluding periods of startup, shutdown, and malfunction; and
- 3.0 ppmv, corrected to 15 percent oxygen, based on a daily rolling 365-day average, with no exclusion for periods of startup, shutdown, or malfunction.

These proposed emission limits are more stringent than any limits imposed on or achieved by any IGCC power plant of which RTP is aware.

4.16.4 Volatile Organic Compounds Emissions

Emissions of VOC from the combined cycle gas turbines at the HEC IGCC power plant will occur as a result of incomplete combustion of the hydrocarbon content of natural gas and syngas fuels.

4.16.4.1 BACT Baseline

There are no applicable NSPS or NESHAP rules that would establish a baseline emission limit for the VOC BACT analysis for the combined cycle gas turbines.

4.16.4.2 Steps 1-4

The identified control technologies for VOC emissions from the HEC IGCC combined cycle gas turbines are the same as the CO control options identified in Section 4.13.3 herein. The only technically feasible control options are good combustion practices and oxidation catalyst. The highest ranked control strategy comprises both of these control technologies used in combination. The adverse energy and environmental impacts of this control strategy are relatively minor and are not a significant factor in the BACT decision.

4.16.4.3 Step 5 - Establish BACT

The proposed VOC emission limits are as follows:

- 0.0017 lb VOC per MMBtu heat input, HHV basis, reported as propane, based on a three-hour average, excluding periods of startup, shutdown, and malfunction.
- 3.0 ppmv CO, corrected to 15 percent oxygen, based on a daily rolling 365-day average, with no exclusion for periods of startup, shutdown, or malfunction.

The long-term CO BACT emission limit is proposed as a surrogate for VOC emissions because the control technologies for both pollutants are the same, so compliance with the CO emission limit will ensure that VOC emissions are minimized to the greatest possible extent, and because continuous monitoring will be provided for CO emissions.

4.16.5 Particulate Matter Emissions

Particulate matter emissions from the combined cycle gas turbines at the HEC IGCC power plant will occur as a result of ash in the fuel oil, sulfates formed from sulfur in the PSA gas and fuel

oil, particles of carbon and low-volatililty hydrocarbons resulting from incomplete combustion, and inert particulate matter (*i.e.*, dust) in the ambient air used as combustion air.

4.16.5.1 BACT Baseline

There are no applicable particulate matter emission standards under any NSPS or NESHAP rule that would establish a BACT baseline for the combined cycle gas turbines under the natural gas design case.

4.16.5.2 Step 1 – Identify Particulate Matter Control Alternatives

Potentially available control technologies for particulate matter emissions from the combined cycle gas turbines at the HEC IGCC power plant include the following:

- Syngas sulfur cleanup by chemical absorption
- Syngas sulfur cleanup by physical absorption
- Specifying ultra low sulfur distillate fuel oil as backup fuel
- Using a NO_X control strategy that excludes SCR
- Using a CO and VOC control strategy that excludes oxidation catalyst

These control options are described in Section 4.13.5.2 herein.

4.16.5.3 Step 2 – Eliminate Technically Infeasible Control Options

All of the identified particulate matter control options are technically feasible for application to the HEC IGCC power plant.

4.16.5.4 Step 3 – Characterize Control Effectiveness of Technically Feasible Control Options

The most effective control strategy for particulate matter emissions involves the combined use of syngas sulfur removal by physical absorption, specifying ultra low sulfur distillate fuel oil as backup fuel, and excluding SCR and oxidation catalyst from the NO_X, CO, and VOC control strategies. The second ranked control strategy would be the same as the first option, but with SCR and oxidation catalyst. Other control strategies would be less effective.

4.16.5.5 Step 4 – Evaluate More Effective Control Options

The highest-ranked control strategy for particulate matter emissions from the combined cycle gas turbines at the HEC IGCC power plant would require that SCR and oxidation catalyst not be used. This control strategy would cause significant, adverse environmental impacts because NO_X, CO, and VOC emissions would increase markedly and negligible reductions in particulate matter emissions would be achieved relative to the second-ranked control strategy.

The second-ranked control strategy will cause insignificant, adverse energy and economic impacts and will yield substantial, beneficial environmental impacts. The adverse impacts are associated with technologies used primarily for control of SO_2, NO_X, CO, and VOC emissions, as discussed in Sections 4.16.1 through 4.16.4 herein, and are not a significant factor in the

BACT determination. This control strategy is therefore selected as BACT for particulate matter emissions from the combined cycle gas turbines.

4.16.5.6 Step 5 - Establish BACT

The proposed particulate matter emission limits are as follows:

- 0.022 lb PM-10 per MMBtu heat input, HHV basis, based on a three-hour average, excluding periods of startup, shutdown, and malfunction.

These proposed emission limits are at least as stringent any limits for any comparable facility of which RTP is aware.

4.17 Diesel Engines

The HEC will include four emergency generators, each with a rated output of approximately 600 kW, and two emergency fire water pumps, each with a rated output of 2,250 kW. This emergency equipment will be powered by compression-ignition, internal combustion engines. These engines are generally similar to engines that are regulated as non-road mobile sources under 40 CFR parts 89 and 1039. However, the engines are not regulated under the mobile source rules because they will remain at the refinery site for more than 12 months and are therefore considered stationary sources.

4.17.1 Sulfur Dioxide Emissions

4.17.1.1 BACT Baseline

Based on the emission standards under subpart IIII of 40 CFR part 60, as discussed in Section 3.2.19 herein, the minimum standards that would meet BACT requirements for SO_2 emissions from the internal combustion engines at the HEC refinery are burning of Diesel fuel meeting the requirements of 40 CFR § 80.510(a) until September 30, 2010, and meeting the requirements of § 80.510(b) after that date. These fuel specifications include a maximum sulfur content of 500 ppmw under § 80.510(a) and 15 ppmw under § 80.510(b).

4.17.1.2 Steps 1-4

The only control options identified for the internal combustion engines are the use of low-sulfur and ultra low-sulfur Diesel fuel. These control options are technically feasible and will not cause any adverse energy, environmental, or economic impacts.

4.17.1.3 Step 5 – Establish BACT

HEC will burn only ultra low-sulfur Diesel fuel, with a maximum sulfur content of 15 ppmw, in the emergency Diesel engines.

4.17.2 Nitrogen Oxides and Volatile Organic Compounds Emissions

4.17.2.1 BACT Baseline

Based on the emission standards under subpart IIII of 40 CFR part 60, as discussed in Section 3.2.19 herein, the minimum standards that would meet BACT requirements for NO_X and VOC emissions from the internal combustion engines at the HEC refinery are as follows:

- For the emergency generator engines, pursuant to 40 CFR §§ 60.4205(b) and 60.4202(a)(2), HEC will be required to meet the combined NO_X and non-methane hydrocarbons emission standards established for nonroad engines of the same model year pursuant to § 89.112. This emission standard is a specification of 6.4 grams per kilowatt hour, as determined using the nonroad engine testing procedures set forth at 40 CFR §§ 89.401 to 89.424.
- For the fire water pump engines, pursuant to 40 CFR §§ 60.4205(c), HEC will be required to meet the combined NO_X and non-methane hydrocarbons emission standards established for nonroad engines of the same model year pursuant to Table 4 of subpart IIII. The emission standards are specifications of 10.5 grams per kilowatt hour if an engine of 2007 or earlier model year is purchased, or 6.4 grams per kilowatt hour otherwise, with compliance determined using the nonroad engine testing procedures set forth at 40 CFR §§ 89.401 to 89.424.

4.17.2.2 Step 1 – Identify NO_X and VOC Control Alternatives

Identified control technologies and techniques for NO_X and VOC emissions from compression-ignition engines include the following:

- Injection timing retard, also called ignition timing retard, which involves delaying the fuel injection point in each engine cycle such that the heat release from fuel combustion occurs during the cylinder expansion. Lower NO_X emissions are achieved by reducing the peak combustion temperature.
- Exhaust gas recirculation, which involves retaining or re-introducing a fraction of the exhaust gases. Lower NO_X emissions are achieved by reducing the peak combustion temperature and by reducing the amount of available molecular oxygen.
- NO_X adsorber technology, which typically utilizes alkali or alkaline earth metal catalysts to adsorb NO_X on the catalyst surface under the fuel-lean and oxygen-rich conditions typical of Diesel engine exhaust. Periodically, the catalyst bed is subjected to fuel-rich exhaust in order to desorb the NO_X and regenerate the catalyst. The desorbed NO_X is catalytically reduced over a second catalyst, typically platinum and rhodium.
- SCR for NO_X reduction, as described in Section 4.2.1.5 herein.
- Oxidation catalyst, as described in Section 4.13.3.1.2 herein.
- Catalyzed Diesel particulate filters, which control emissions by capturing particulate matter in a filter media, typically a ceramic wall flow substrate, and then by oxidizing (burning) it in the oxygen-rich atmosphere of diesel exhaust. The particulate matter emitted by Diesel engines includes semi-volatile organic compounds that are regulated as VOC.

4.17.2.3 Step 2 – Eliminate Technically Infeasible Control Options

All of the identified control options are technically feasible.

4.17.2.4 Step 3 – Characterize Control Effectiveness of Technically Feasible Control Options

The third-ranked control option for NO_X and VOC emissions comprises the use of internal combustion engines certified by the engine manufacturer to meet the Tier 2 emission standards for non-road, compression-ignition engines, as codified at 40 CFR § 89.112. Engines meeting these standards may use multiple in-engine control technologies including injection timing retard and exhaust gas recirculation. This control option would result in total NO_X and VOC emissions of less than 15 tons per year from all six internal combustion engines.

The second-ranked control option for NO_X and VOC emissions involves the use of SCR and oxidation catalyst in conjunction with the third-ranked control option. For the purposes of this BACT analysis, it is assumed that 80 percent reduction in NO_X and VOC emissions, down to a total annual emission level of 3 tons from all six engines, is achievable with this control option. This likely overstates the achievable emission reduction by a significant amount, as each engine will have very little time operating under the steady-state conditions favorable for SCR and oxidation catalyst system performance.

The highest-ranked control option for NO_X and VOC emissions involves the use of catalyzed Diesel particulate filters and NO_X adsorber technology in conjunction with the third-ranked control option. For the purposes of this BACT analysis, it is assumed that 90 percent emission reduction is achievable.

4.17.2.5 Step 4 – Evaluate More Effective Control Options

In the case of each internal combustion engine, the third-ranked control option will not cause any adverse energy, environmental, or economic impacts. The higher-ranked control options will cause adverse impacts that warrant their exclusion as BACT. The adverse impacts include energy impacts, due to reduced energy efficiency attributable to increased pressure drop, and environmental impacts associated with catalyst disposal. These adverse energy and environmental impacts are minimal.

The adverse economic impacts that would result from requiring catalytic add-on controls for the six emergency use, internal combustion engines would be significant. Economic analyses prepared by U.S. EPA in its rulemaking for NSPS subpart IIII showed that, for emergency use engines, the cost effectiveness of SCR is more than $100,000 per ton of NO_X reduction, and the cost of catalyzed Diesel particulate filters and NO_X adsorbers are more than $20,000 per ton of total NO_X and VOC emission reduction. Considering the minimal environmental benefit that would result, and the adverse energy and environmental impacts described above, these controls are rejected as BACT.

4.17.2.6 Step 5 – Establish BACT

The six Diesel-fired, compression-ignition internal combustion engines at the HEC will be certified by the equipment manufacturers to meet the Tier 2 emission standards for nonroad,

compression-ignition engines, as codified at 40 CFR § 89.112. Due to the very low emissions from these sources, the fact that they will operate only intermittently, and the availability of engines that are certified to achieve this emission level, and considering the nature of the certification test procedure for the nonroad engine emission standards, RTP proposes that an equipment design standard rather than an emission rate limit is an appropriate form of expression for the NO_X and VOC BACT requirements for these engines.

4.17.3 Carbon Monoxide Emissions

4.17.3.1 BACT Baseline

Based on the emission standards under subpart IIII of 40 CFR part 60, as discussed in Section 3.2.19 herein, the minimum standards that would meet BACT requirements for CO emissions from the internal combustion engines at the HEC refinery are as follows:

- For the emergency generator engines, pursuant to 40 CFR §§ 60.4205(b) and 60.4202(a)(2), HEC will be required to meet the CO emission standard established for nonroad engines of the same model year pursuant to § 89.112. This emission standard is a specification of 3.5 grams per kilowatt hour, as determined using the nonroad engine testing procedures set forth at 40 CFR §§ 89.401 to 89.424.
- For the fire water pump engines, pursuant to 40 CFR §§ 60.4205(c), HEC will be required to meet the CO emission standard established for nonroad engines of the same model year pursuant to Table 4 of subpart IIII. This emission standard is a specification of 3.5 grams per kilowatt hour, as determined using the nonroad engine testing procedures set forth at 40 CFR §§ 89.401 to 89.424.

4.17.3.2 Steps 1-4

Identified control technologies and techniques for CO emissions include the combustion controls identified for VOC in Section 4.15.2.2 herein as well as oxidation catalyst. All of these technologies are technically feasible. The second-ranked control option, using engines that meet the Tier 2 emission standards for non-road engines, will result in CO emissions of 8 tons per year. Oxidation catalyst could achieve a CO emission rate less than 1 ton per year, but is rejected as BACT due to its adverse energy, environmental, and economic impacts and its minimal environmental benefit, as discussed in the VOC BACT analysis.

4.17.3.3 Step 5 – Establish BACT

The six Diesel-fired, compression-ignition internal combustion engines at the HEC will be certified by the equipment manufacturers to meet the Tier 2 emission standards for nonroad, compression-ignition engines, as codified at 40 CFR § 89.112. Due to the very low emissions from these sources, the fact that they will operate only intermittently, and the availability of engines that are certified to achieve this emission level, and considering the nature of the certification test procedure for the nonroad engine emission standards, RTP proposes that an equipment design standard rather than an emission rate limit is an appropriate form of expression for the CO BACT requirement for these engines.

4.17.4 Particulate Matter Emissions

4.17.4.1 BACT Baseline

Based on the emission standards under subpart IIII of 40 CFR part 60, as discussed in Section 3.2.19 herein, the minimum standards that would meet BACT requirements for PM emissions from the internal combustion engines at the HEC refinery are as follows:

- For the emergency generator engines, pursuant to 40 CFR §§ 60.4205(b) and 60.4202(a)(2), HEC will be required to meet the PM emission standard established for nonroad engines of the same model year pursuant to § 89.112. This emission standard is a specification of 0.20 grams per kilowatt hour, as determined using the nonroad engine testing procedures set forth at 40 CFR §§ 89.401 to 89.424.
- For the fire water pump engines, pursuant to 40 CFR §§ 60.4205(c), HEC will be required to meet the PM emission standards established for nonroad engines of the same model year pursuant to Table 4 of subpart IIII. The emission standards are specifications of 0.54 grams per kilowatt hour if an engine of 2007 or earlier model year is purchased, or 0.20 grams per kilowatt hour otherwise, with compliance determined using the nonroad engine testing procedures set forth at 40 CFR §§ 89.401 to 89.424.

4.17.4.2 Steps 1-4

Identified control technologies and techniques for PM emissions are the same technologies identified for VOC emissions in Section 4.15.2.2 herein. These technologies are technically feasible. The second-ranked control option, using engines that meet the Tier 2 emission standards for non-road engines, will result in PM emissions of 0.5 tons per year. The use of catalyst Diesel particulate filters could achieve a PM emission rate less than 0.1 ton per year, but is rejected as BACT due to its adverse energy, environmental, and economic impacts and its minimal environmental benefit, as discussed in the VOC BACT analysis.

4.17.4.3 Step 5 – Establish BACT

The six Diesel-fired, compression-ignition internal combustion engines at the HEC will be certified by the equipment manufacturers to meet the Tier 2 emission standards for nonroad, compression-ignition engines, as codified at 40 CFR § 89.112. Due to the very low emissions from these sources, the fact that they will operate only intermittently, and the availability of engines that are certified to achieve this emission level, and considering the nature of the certification test procedure for the nonroad engine emission standards, RTP proposes that an equipment design standard rather than an emission rate limit is an appropriate form of expression for the PM BACT requirement for these engines.

Chapter 5. Summary of Project Emissions.

Potential air emissions for all emissions units at the HEC are summarized in this section of the permit application. The emission calculations are based on the proposed BACT emission limits summarized in Section 4 herein, as well as additional operating factors and limitations as described in each individual section below. Table 5.0-1 presents a summary of pollutant emission rates from all emission units at the proposed petroleum refinery and IGCC power plant. Emissions from specific emission units, including emission calculation methodologies and assumptions and tabular emission summaries, are presented in Section 5.1 for the petroleum refinery and Section 5.2 for the IGCC power plant. Detailed calculations are presented in Appendix C to this permit application.

TABLE 5.0-1. Summary of HEC Air Pollutant Emissions

Pollutant	Petroleum Refinery (tpy)	IGCC Power Plant (tpy)	Diesel Engines (tpy)	Total (tpy)
Carbon Monoxide	1,659	338	2	1,999
Nitrogen Oxides	424	346	3	773
PM	107	214	0	321
PM-10	349	697	0	1,046
PM-2.5	349	697	0	1,046
Sulfur Dioxide	676	187	0	863
VOC	406	67	0	473
Hydrogen Sulfide	6	19	0	25
Sulfuric Acid Mist	63	16	0	80
Hydrogen Chloride	49	0	0	49
Organic HAP	185	27	0	212
Ammonia	77	197	0	273

5.1 Petroleum Refinery

5.1.1 Process Heaters

Hourly and annual emissions from the process heaters at the proposed refinery are presented in Table 5.1-1. Emissions of all pollutants from process heaters were calculated as the product of the design heat input capacity, expressed in MMBtu/hr, and an emission factor, expressed in lb/MMBtu heat input. Annual emissions are calculated assuming the hourly emission rate for 8,760 hours per year.

TABLE 5.1-1. Summary of Emissions from Process Heaters

POLLUTANT	Emissions lb/hr	Emissions tpy	CONTROL TECHNOLOGY
CO	344.2	1,507.5	Good combustion control
NO_X	64.2	281.1	Low-NO_X burners on all heaters; SCR on large heaters
PM	16.3	71.6	Low sulfur fuel
PM-10	64.5	282.6	Low sulfur fuel
SO_2	39.8	174.4	Amine treating of refinery gas
VOC	40.4	177.1	Good combustion control
H_2SO_4	5.7	25.1	Low sulfur fuel
Organic HAP	40.4	177.1	Good combustion control
HCl	10.3	45.2	Chloride scrubbing
NH_3	17.5	76.8	Minimize slip in SCR

Emission factors used to calculate emissions from process heaters are shown in Table 5.1-2. These emission factors are based on the proposed BACT emission limits, where applicable, or either engineering estimates or published emission factors for other pollutants.

TABLE 5.1-2. Emission Factors for Process Heaters (lb/MMBtu)

POLLUTANT	SMALL HEATERS (< 100 MMBtu/hr)	LARGE HEATERS (≥ 100 MMBtu/hr)	BASIS FOR FACTOR
CO	0.0400		BACT
NO_X	0.025	0.0060	BACT
PM	0.0019		AP-42
PM-10	0.0075		BACT
SO_2	0.0046		BACT
VOC	0.0047		Engineering Estimate
H_2SO_4	0.0001	0.0007	Engineering Estimate
Organic HAP	0.0047		Engineering Estimate
HCl	0.0012		MACT
NH_3	n/a	0.0022	Engineering Estimate
CO_2	129.2		Engineering Estimate

5.1.1.1 Carbon Monoxide

The emission factor for CO is based on the proposed BACT emission limit as described in Section 4.2.3 herein.

5.1.1.2 Nitrogen Oxides

The emission factors for NO_X are based on the proposed BACT emission limits as described in Section 4.2.1 herein.

5.1.1.3 Particulate Matter

The emission factor for PM-10 is calculated using the proposed BACT emission limit as described in Section 4.2.5 herein. The emission factor for filterable PM is based on the AP-42 emission factor for natural gas combustion.

5.1.1.4 Sulfur Oxides

For SO_2, the emission factor is calculated using the proposed fuel sulfur limit of 35 ppmv as described in Section 4.2.2 herein. Assuming a fuel gas heating value of 1,255 Btu per standard cubic foot, this equates to 0.0046 lb/MMBtu heat input.

Sulfuric acid mist emissions are calculated as a fraction of the SO_2 emissions, assuming that a percentage of SO_2 is oxidized to SO_3, and adjusting for the molecular weight of H_2SO_4. For heaters without SCR for NO_X control, RTP assumed that two percent of SO_2 is oxidized to SO_3; for heaters with SCR, ten percent oxidation was assumed.

5.1.1.5 VOC and Organic HAP

The emission factor for VOC is calculated using an engineering estimate of 0.0047 lb/MMBtu, which is equivalent to an exhaust gas concentration of 4.0 ppmv at 3 percent oxygen. The VOC emission factor is conservatively assumed to represent the emission factor for organic HAP as well.

5.1.1.6 Ammonia

Ammonia (NH_3) is only emitted by the process heaters that are equipped with SCR. The emission factor of 0.0022 lb/MMBtu is calculated based on a conservatively assumed ammonia slip level of 5.0 ppmv at 3 percent oxygen.

5.1.2 Refinery Flares

Emissions of all pollutants from the refinery flares were calculated as the product of emission factors, expressed in lb/MMBtu heat input, and heat input rates, expressed in MMBtu/hr, using the flare pilot gas rate for the heat input. A pilot heat input rate of 1 MMBtu/hr was used for each of the five refinery flares. Annual emissions are calculated assuming the hourly emission rate for 8,760 hours per year. Emission factors used to calculate emissions of NO_X, CO, and VOC from the refinery flares were derived from Section 13.5 of AP-42. For the remaining pollutants, the process heater emission factors were used.

5.1.3 Catalyst Regeneration Vents

There are three catalyst regenerators at the proposed refinery, one at each of the Catalytic Reforming Units and one at the Butane Conversion Unit. Emissions from each regenerator were calculated using design exhaust gas volumetric flow rate and pollutant concentrations representing BACT, where applicable, or vendor-supplied information for non-PSD pollutants.

All three catalyst regenerators are assumed to operate at maximum capacity, without restriction, on a year-round basis. Thus, annual emissions are calculated assuming the hourly emission rate for 8,760 hours per year. Emissions are summarized in Table 5.1-3.

TABLE 5.1-3. Summary of Estimated Emissions from Catalyst Regeneration Vents

POLLUTANT	lb/hr	tpy
CO	1.1	4.7
NO_X	0.2	0.8
PM	0.02	0.1
PM-10	0.02	0.1
SO_2	0.4	1.6
HCl	0.8	3.7

5.1.4 Cooling Tower

Emissions from the cooling tower will include particulate matter, due to the dissolved solids content of aerosol drift from the tower, and VOC from evaporation of organic compounds that may be present in cooling water due to leaks in indirect contact heat exchangers. Continuous monitoring will be used to detect any such leaks, so as to provide for timely repair.

Emissions of VOC from the cooling tower are calculated as the product of the design maximum cooling water flow rate of 130,000 gallons per minute and an emission factor of 0.7 pounds per million gallons of cooling water flow derived from Section 5.1 of AP-42. Annual VOC emissions are 23.9 tons of VOC.

Emissions of PM and PM-10 from the cooling tower are calculated as the product of the cooling water flow rate of 130,000 gallons per minute, an emission factor of 0.0005 percent of the cooling water flow, and a total dissolved solids concentration of 3,750 ppmw. This emissions equation is from Section 13.4 of AP-42 and results in an emission rate of 5.34 tons per year.

TABLE 5.1-4. Summary of Emissions from Cooling Tower.

Pollutant	Emissions (tpy)
PM/PM-10	5.3
VOC	23.9

5.1.5 Sulfur Recovery Plant

All emissions from the Sulfur Recovery Plant, with the exception of fugitive emissions due to equipment leaks, will be emitted from the stack of the six Sulfur Recovery Plant Thermal Oxidizers. This section describes the emissions from the thermal oxidizers.

The Sulfur Recovery Plant is proposed to operate at maximum capacity, without restriction, on a year-round basis. Thus, annual emissions are calculated assuming the maximum hourly emission rate for 8,760 hours per year.

Emissions from the Sulfur Recovery Plant are based on the proposed BACT emission limits, as applicable. Emissions of CO, VOC, and organic HAP were calculated using emission factors and auxiliary fuel heat input capacity in the same manner described in Section 5.1.1, with respect to process heater emissions. A maximum heat input capacity of 402.5 MMBtu/hr, representing the capacity of four thermal oxidizers operating concurrently, was used for this purpose. Table 5.1-1 summarizes the Sulfur Recovery Plant emission rates.

TABLE 5.1-5. Summary of Emissions from Sulfur Recovery Plant

POLLUTANT	Emissions (lb/hr)	Emissions (tpy)
CO	33.1	145.2
NO_X	27.4	119.9
PM	0.6	2.7
PM-10	11.2	49.0
SO_2	114.2	500.2
H_2S	0.3	1.3
VOC	2.2	9.5
H_2SO_4	8.7	38.3
Organic HAP	1.9	8.3

5.1.6 Storage Tanks

Emissions from organic liquid storage tanks were calculated using U.S. EPA's "TANKS 4.09" software, which uses the emission factor equations from AP-42 Chapter 7. These emissions are summarized in Table 5.1-6.

TABLE 5.1-6. Summary of Emissions from Storage Tanks

POLLUTANT	Emissions (tpy)
VOC	152.7
PM / PM-10	9.3

5.1.7 Product Loading Racks

Emissions of VOC from tank truck and railcar product loading racks were calculated using the proposed BACT emission limit of 1.25 lb per million gallons of product loaded. These emissions are summarized in Table 5.1-7.

TABLE 5.1-7. Summary of VOC Emissions from Loading Racks

Source	VOC Emissions (tpy)
Truck Loading Rack	0.15
Railcar Loading Rack	0.15

Emissions of PM, PM-10, and PM-2.5 were developed using the AP-42 methodology found in Chapter 13.2. These emissions are summarized in Table 5.1-8.

TABLE 5.1-8. Summary of Particulate Matter Emissions from Loading Racks

Source ID	Total Distance Roundtrip (miles)	Potential VMT (miles/day)	Emission Factor (lb/VMT)	Maximum Short-term Emissions (lb/hr)	Potential Annual Emissions (tons/yr)
PM	0.56	56	0.706	2.47	3.6
PM10	0.56	56	0.137	0.48	0.7
PM2.5	0.56	56	0.020	0.07	0.1

5.1.8 Wastewater Treatment Plant

Uncontrolled emissions of VOC from each vessel within the wastewater treatment plant were calculated using U.S. EPA's "WATER9" software. A control efficiency of 98 percent was applied to the uncontrolled VOC emissions from the API separators and the primary DAF units, based on the use of a thermal oxidizer, consistent with the proposed VOC BACT determination described in Section 4.9.1 herein. The NO_X emissions from the thermal oxidizer are based on the proposed BACT emission limit. Emissions from the Wastewater Treatment Plant are summarized in Table 5.1-9.

TABLE 5.1-9. Summary of Emissions from Wastewater Treatment Plant

POLLUTANT	Emissions (tpy)
VOC	23.0
NO_X	21.9

5.1.9 Petroleum Coke Handling

Emissions of particulate matter from petroleum coke handling within the petroleum refinery, at the Delayed Coking Units were calculated using different calculation methods for fugitive drop points, fugitive crusher operations, and enclosed conveyors. Specifically, fugitive emissions

from drop points, such as wet coke dropping from the bottom of coke drum onto the coke pad were estimated using the drop point equation found in AP-42 Section 13.2.4 – Aggregate Handling and Storage Piles. This equation takes into account the coke moisture content and the wind speed. Because the coke is quite wet at this point in the handling process due to the use of water jet cutting, a coke moisture content of 10 percent was used. An average annual wind speed of 11 miles per hour was used.

Fugitive emissions from the coke crushers were estimated using the tertiary crushing controlled with moisture emission factor found in AP-42 Table 11.19.2-2 for Stone Crushing operations.

Emissions from the enclosed conveyors were estimated using the controlled conveyor transfer emission factor found in AP-42 Table 11.19.2-2 for Stone Crushing operations.

TABLE 5.1-10. Summary of Emissions from Petroleum Refining Coke Handling

POLLUTANT	Emissions (tpy)
PM	4.3
PM-10	2.1

5.1.10 Equipment Leaks

Emissions of VOC and H_2S from equipment leaks were calculated using the "EPA Correlation Approach" set forth in the U.S. EPA document, *Protocol for Equipment Leak Emission Estimates* (EPA-453/R-95-017), November 1995. This approach uses exponential equations based on the results of extensive studies quantifying and correlating petroleum refinery component leak concentrations and mass emission rates. These equations are designed to predict the mass emission rate from a component based on the pollutant concentration, as measured by U.S. EPA Reference Method 21, at the leak interface. (All subsequent references to concentration within this section refer to the pollutant concentration on this basis.) In addition to the exponential equations, the EPA Correlation Approach includes emission rates for components with zero VOC concentration at the leak interface. These "default zero" emission rates are small, but are larger than would be predicted by the correlation equations, and are based on study data showing non-zero mass emission rates from components with pollutant concentration below the method detection limit.

Annual emissions of VOC from equipment leaks were based on the conservative assumption that 0.3 percent of valves and connectors in gas/vapor service and light liquid service are leakers, reflecting an emission limit that is an element of the proposed VOC BACT determination, and 99.7 percent are non-leakers. For all other component types, 1 percent were assumed to be leakers and 99 percent nonleakers.

Each leaking component, regardless of type and service, was conservatively assumed to be emitting at an equivalent concentration of 10,000 ppmv (*i.e.*, 20 to 100 times the proposed leak definition level). Ninety-nine percent of compressors, 49.5 percent of pumps in light hydrocarbon service, and one percent of all other component types were conservatively assumed

to be emitting at an equivalent concentration equal to that at which they would be considered leakers. All remaining components were assumed to be emitting at the default zero emission rate.

TABLE 5.1-11. Summary of Emissions from Petroleum Refinery Equipment Leaks

POLLUTANT	Emissions (tpy)
VOC	19.3
H_2S	5.2

5.2 IGCC Power Plant

5.2.1 Materials Handling and Storage

Particulate matter emissions from fugitive drop points and enclosed conveyors associated with the petroleum coke, coal, flux, and slag, handling operations were calculated using the same methods described in Section 5.1.9 herein. A moisture content of 10 percent was used for petroleum coke, and a moisture content of 4 percent was used for slag and flux.

Emissions from the baghouse vents on the storage, loading, and unloading buildings were estimated using the design gas flow rate in dry standard cubic feet times in conjunction with the proposed BACT emission limit of 0.005 grains per dry standard cubic foot.

Emissions from materials handling and storage operations at the IGCC Power Plant are summarized in Table 5.2-1.

TABLE 5.2-1. Summary of Emissions from IGCC Power Plant Coke Handling

POLLUTANT	Emissions (tpy)
PM	50.2
PM-10	50.0

5.2.2 Gasification

The gasification block has four types of emissions units: emissions from equipment leaks, emissions from the gasifier startup burners, emission from flaring due to restarts and malfunctions; and emissions from the Rectisol® CO_2 vent. Emissions from each of these four types of emissions units are described below.

5.2.2.1 Equipment Leaks

Emissions from equipment leaks at the IGCC Power Plant were calculated using the same methods and assumptions described in Section 5.1.10 herein. These emissions are summarized in Table 5.2-2.

TABLE 5.2-2. Summary of Emissions from IGCC Power Plant

POLLUTANT	Emissions (tpy)
VOC	4.1
H_2S	0.3

5.2.2.2 Gasifier Startup Burners

When a gasifier is started up or restarted, the temperature in the vessel must be slowly raised to gasification temperature in order to avoid damaging the gasifier vessel refractory. The gasifier is heated up by firing natural gas in a burner in the top of the gasifier vessel. The combustion gases from the startup burner are educted through the vessel using steam to a startup vent stack. Each gasifier has its own burner and eduction system with all vents being educted to the same vent stack. Table 5.2-3 presents the number and type of anticipated gasifier startup events and the associated heat input from natural gas consumption during these events.

TABLE 5.2-3. Summary of Gasifier Startup Burner Operation

Startup Event Type	Annual Events	Hours per Event	Heat Input MMBtu/hr	Heat Input MMBtu/yr
Hot Restarts	21	8	18	3,024
Warm Restarts	6	36	18	3,888
Cold Restarts	6	160	18	17,280
Totals	33			24,192

Emissions from the gasifier startup burners were estimated using the heat input rates listed in Table 5.2-3 in conjunction with the appropriate emission factor for each pollutant. For all pollutants other than SO_2 and sulfuric acid mist, the emission factors used were the same as those used to calculate emissions from the refinery flare pilot as described in Section 5.1.2. Sulfur dioxide emissions were calculated using the AP-42 emission factor for natural gas, and sulfuric acid mist emissions were calculated as 2.15 percent of the SO_2 emissions. These emissions are summarized in Table 5.2-4.

TABLE 5.2-4. Summary of Emissions from Gasifier Startup Burners

POLLUTANT	Emissions (tpy)
NO_X	0.8
SO_2	0.1
CO	4.5
PM	0.0
PM-10	0.1
VOC	1.7
H_2SO_4	0.0
Organic HAP	0.1

5.2.2.3 Gasification Flare

Emissions from the gasification flare result from both pilot gas usage and from flaring of syngas.

Emissions of all pollutants from pilot gas usage in the gasification flare were calculated as the product of emission factors, expressed in lb/MMBtu heat input, and a heat input rate of 1 MMBtu/hr. Annual emissions are calculated assuming the hourly emission rate for 8,760 hours per year. Emission factors used to calculate emissions from pilot gas combustion are the same as those used for the refinery flares as described in Section 5.1.2.

During shutdown and startup of the gasifiers, flaring of clean syngas is required. The heat input rate during flaring is estimated to be 786.4 MMBtu/hr, which represents two-thirds of the maximum heat input rate to one gasifier. Table 5.2-5 shows the types of events in which syngas is flared and the anticipated number of flaring hours.

TABLE 5.2-5. Summary of Gasifier Flaring Events

Startup Event Type	Annual Events	Hours per Event	Heat Input MMBtu/hr	Heat Input MMBtu/yr
Initial Start	1	24	786.4	18,874
Hot Restarts	21	5	786.4	82,575
Warm Restarts	6	30	786.4	23,593
Cold Restarts	6	30	786.4	23,593
Totals	33			148,635

Emissions from the gasification flare during flaring events were estimated using the heat input rates listed in Table 5.2-5 in conjunction with the appropriate emission factor for each pollutant. For all pollutants other than SO_2 and sulfuric acid mist, the emission factors used were the same as those used to calculate emissions from the refinery flare pilot as described in Section 5.1.2. Sulfur dioxide and sulfuric acid mist emissions were calculated emission factors of 0.02 lb/MMBtu and 0.0003 lb/MMBtu, respectively.

Table 5.2-6 summarizes the emissions from the gasification flare.

TABLE 5.2-6. Summary of Emissions from Gasification Flare

POLLUTANT	Emissions (tpy)		
	Pilot	Flaring	Total
NO_X	0.3	5.1	5.4
SO_2	0.0	1.5	1.5
CO	1.6	27.5	29.1
PM	0.0	0.1	0.1
PM-10	0.1	0.5	0.6
VOC	0.6	10.4	11.0
H_2SO_4	0.0	0.0	0.0
Organic HAP	0.0	0.4	0.4

5.2.2.4 Rectisol® CO_2 Vent

The Rectisol Unit produces a concentrated CO_2 stream that contains trace concentrations of CO and H_2S. Emissions of each pollutant are calculated on the basis of the volumetric flow rate (44,790 lb-mole per hour) and the volumetric concentrations representing BACT. These emissions are summarized in Table 5.2-7.

TABLE 5.2-7. Summary of Emissions from CO_2 Vent

POLLUTANT	Emissions			
	ppmv	lb-mole/hr	lb/hr	tpy
CO	20	0.90	25.1	109.9
H_2S	3	0.12	4.2	18.3

5.2.3 Combined Cycle Gas Turbines

Hourly and annual emissions from the combined cycle gas turbines at the proposed refinery are presented in Table 5.2-6. Emissions of all pollutants were calculated as the product of the design heat input capacity, expressed in MMBtu/hr, and fuel-specific emission factors, expressed in lb/MMBtu heat input. Annual emissions are calculated assuming operation at maximum capacity for 8,760 hours per year.

TABLE 5.2-6. Summary of Emissions from Combined Cycle Gas Turbines

POLLUTANT	Emissions	
	lb/hr	Tpy
CO	44.4	194.4
NO_X	153.1	339.4
PM	37.4	163.8
PM-10	147.6	646.5
SO_2	42.3	185.4
VOC	11.4	50.0
H_2SO_4	3.7	16.2
Organic HAP	6.0	26.4
NH_3	44.9	196.7

5.3 Diesel Engines

Hourly and annual emissions from each of the six internal combustion engines at the proposed refinery are presented in Table 5-3-1. Emissions of all pollutants from internal combustion engines were calculated by multiplying the heat input capacity in kilowatts (kW) and emission factors, in grams per hour (g/kWh). Each internal combustion engine is proposed to be subject to a fuel use restriction that limits its operation to the equivalent of 300 hours per year, based on equivalent full-load operation. Thus, annual emissions are calculated assuming the hourly emission rate for 300 hours per year. Emission factors used to calculate emissions from internal combustion engines are shown in Table 5-4 and represent the proposed BACT emission standards. For SO_2, the emission factor is derived from Section 3.4 of AP-42, using the maximum allowable fuel sulfur level of 15 parts per million by weight. For the purpose of calculating NO_X emissions, it is assumed that zero VOC is emitted, *i.e.*, that the NO_X emission rate from each engine is equal to the allowable NO_X + NMHC emission limit. Potential VOC emissions are calculated using the emission factor from Section 3.4 of AP-42.

TABLE 5.3-1. Emissions from Diesel Engines

PARAMETER		Fire water pumps (each of 2)	Emergency Generators (each of 4)	Total
Output	kW	2,250	600	
Operation	hrs/yr	300	300	
	kWh/yr	675,000	180,000	
Emission Factors g/kWh	NO_X	6.4	6.4	
	VOC	0.3	0.3	
	CO	3.5	3.5	
	SO_2	0.007	0.007	
	PM-10	0.2	0.2	
Emission Rates lb/hr	NO_X	31.7	8.5	97.4
	VOC	1.7	0.4	5.1
	CO	17.4	4.6	53.2
	SO_2	0.04	0.01	0.1
	PM-10	1.0	0.3	3.0
Emission Rates tons/yr	NO_X	1.1	0.3	3.3
	VOC	0.06	0.02	0.2
	CO	0.6	0.2	1.8
	SO_2	0.001	0.000	0.004
	PM-10	0.03	0.01	0.1

Chapter 6. Analysis of Impacts Due to Growth

6.1 Overview

As described in Section 3.1.4 herein, the proposed Hyperion Energy Center is a major stationary source subject to PSD program requirements, including an analysis of general commercial, residential, industrial, and other growth associated with the proposed source. This analysis is used, in conjunction with the analysis of air quality impacts that will occur as a result of the emissions from the major stationary source, in order to assess the impacts of activities that are not a part of the source but can reasonably be expected to occur as a result of the source. For the proposed HEC, quantifiable growth includes commercial and residential growth due to the project workforce.

No quantifiable industrial growth is reasonably expected to occur as a direct result of the petroleum refinery and IGCC power plant. The primary raw materials for these operations will not be produced in the area surrounding the project site, but will be transported from remote locations. For example, crude oil and natural gas are expected to be received by pipeline, and butane and gasification flux are expected to be received by railcar. No further processing of the facility's products will be required, so no quantifiable industrial growth in the area is expected to occur for that purpose. Other industrial operations that may be synergistic with the proposed HEC petroleum refinery and IGCC power plant, such as ethanol or fertilizer production facilities, are speculative and are not reasonably expected to occur as a result of the HEC construction and operation.

The proposed HEC will be located in Union County, South Dakota, approximately 50 miles south of Sioux Falls, South Dakota, and approximately 30 miles northwest of Sioux City, Iowa. As described in detail in the population growth analysis presented in Appendix G to this permit application, the increase in population attributable to the operation of the HEC is expected to be approximately 32,000 individuals, and these effects are expected to be distributed broadly over the fifteen-county, tri-state Siouxland region. This region has a current population of approximately 480,000 persons and has one of the strongest business climates in the nation.

It is anticipated that the project will employ an average of 4,500 workers during the four year construction phase. Upon completion of construction, approximately 1,800 skilled permanent jobs will be created for the ongoing operation of the petroleum refinery and IGCC power plant. Although this represents significant job growth in the Siouxland area, the emissions associated with residential and commercial growth will not be substantial when compared to emissions directly from the major stationary source, or when compared to existing emissions from area sources, as discussed below.

Consistent with U.S. EPA policy, this analysis of impacts due to general residential and commercial growth associated with the HEC focuses on the permanent impacts during the operational phase of the project. Aggregate air quality impacts during the construction phase of the project are expected to be small in relation to the impacts during the operational phase, because the petroleum refinery and IGCC power plant will not yet be operating or emitting.

6.2 Growth in Population

As described in detail in Appendix G to this permit application, the estimated total increase in population associated with the operation of the HEC is expected to be approximately 32,000 individuals. This increase in population is expected to be dispersed through fifteen counties in the tri-state Siouxland region. As shown in Table 6.2-1, the affected region encompasses more than 9,000 square miles. The population of this region was approximately 450,000 persons in 2000 and approximately 480,000 persons in 2006, representing an annual population growth rate of approximately 0.9 percent. The anticipated population growth associated with the HEC represents approximately 6.7 percent of the current population, or an increase of current population growth.

TABLE 6.2-1. Counties in HEC Population Growth Impact Area

County	Land Area (square miles)	Population (2000)	Population (2006)	Population Density (persons/mi^2)
Lyon County, IA	588	11,763	11,636	20
Monona County, IA	693	10,020	9,343	13
Plymouth County, IA	864	24,849	24,906	29
Sioux County, IA	768	31,589	32,525	42
Woodbury County, IA	873	103,877	102,972	118
Cedar County, NE	740	9,615	8,819	12
Dakota County, NE	264	20,253	20,587	78
Dixon County, NE	476	6,339	6,170	13
Thurston County, NE	394	7,171	7,273	18
Clay County, SD	412	13,537	12,867	31
Lincoln County, SD	578	24,131	35,239	61
Minnehaha County, SD	810	148,281	163,281	202
Turner County, SD	617	8,849	8,540	14
Union County, SD	460	12,584	13,745	30
Yankton County, SD	522	21,652	21,779	42
Total	9,057	454,510	479,682	53

6.3 Growth in Air Pollutant Emissions

As described previously, the HEC is expected to cause population growth in the fifteen-county, tri-state Siouxland region. The associated residential and commercial growth will result in increased air pollutant emissions throughout this region.

The Siouxland region is predominantly rural and not heavily industrialized. This is reflected in the current inventory of air pollutant emissions, which is dominated by area sources, which account for more than 82 percent of total criteria pollutant emissions. The two most urbanized counties are Woodbury County, Iowa, and Minnehaha County, South Dakota. As shown in Table 6.3-1, these two counties account for 20 percent of the affected region's land area, 55 percent of its population, and more than 99 percent of the stationary source criteria pollutant emissions for the entire area.

TABLE 6.3-1. Emissions Inventory in HEC Population Growth Impact Area

County	Criteria Pollutant Emissions (tons/yr)[9]			Emissions Density (tons/yr/mi^2)
	Area Sources	Stationary Sources	Total	
Lyon County, IA	12,361	0	12,361	21
Monona County, IA	17,381	0	17,381	25
Plymouth County, IA	22,441	0	22,441	26
Sioux County, IA	26,894	0	26,894	35
Woodbury County, IA	52,250	71,697	123,947	142
Cedar County, NE	16,709	38	16,747	23
Dakota County, NE	14,701	347	15,048	57
Dixon County, NE	9,699	87	9,785	21
Thurston County, NE	10,988	32	11,021	28
Clay County, SD	8,338	0	8,338	20
Lincoln County, SD	20,976	0	20,976	36
Minnehaha County, SD	84,936	844	85,781	106
Turner County, SD	11,085	0	11,085	18
Union County, SD	19,639	0	19,639	43
Yankton County, SD	14,706	0	14,706	28
Total	343,103	73,046	416,149	46

For the purposes of this growth impacts analysis, RTP has used the National Emissions Inventory data available on the U.S. EPA website to characterize the current emissions inventory for the affected region.[10] In conjunction with this inventory, RTP has made conservative assumptions regarding the impacts of residential and commercial growth associated with the HEC in order to predict the increases in air pollutant emissions.

[9] See http://www.epa.gov/air/data/index.html.
[10] See http://www.epa.gov/air/data/index.html.

6.3.1 Stationary Source Emissions

For the reasons described in Section 6.1 herein, no quantifiable industrial growth is reasonably expected to occur as a direct result of the HEC petroleum refinery and IGCC power plant. Therefore, no increase in air pollutant emissions from stationary sources is expected to occur within the affected area.

6.3.2 Tailpipe Emissions

As noted previously, RTP has made numerous conservative assumptions in this analysis of air quality impacts due to residential and commercial growth associated with the HEC. The most significant of these assumptions pertains to mobile sources. According to U.S. EPA interpretive policy relating to the necessary elements of the growth analysis required by 40 CFR § 52.21(o), mobile source tailpipe emissions are not required to be included. Nonetheless, RTP has included motor vehicle exhaust emissions in this analysis in order to ensure that the analysis is conservative because those emissions will be the single largest cause of area source emissions growth associated with the project.

6.3.2.1 Tank Trucks

As described in Section 5.1.11 herein, tank trucks will be used to transport a portion of the petroleum refinery's production of liquid transportation fuels. Emissions from these tank trucks within the affected area are summarized in Table 6.3-2. RTP calculated these emissions using the following methodology and assumptions:

- Approximately 18,250 round-trips are anticipated annually.
- Each round-trip is expected to include approximately 80 miles within the affected area, so the tanker trucks are expected to travel a total of 1.5 million miles per year within the affected area.
- Using EPA's average ratio of 2.04 brake horsepower-hour per mile for heavy duty diesel vehicles, the total annual energy output of tanker trucks in the affected area is 3 million brake horsepower hours.
- RTP used the exhaust emission standards for model 2007 and later diesel heavy-duty engines at 40 CFR § 86.007-11 to calculate emissions of each pollutant other than SO_2.
- For SO_2, RTP assumed the use of fuel with a sulfur content of 15 ppm by weight.

TABLE 6.3-2. Tank Truck Exhaust Emissions

Pollutant	Emission Factor (g/bhp-hr)	Emissions (tons/yr)
CO	15.5	51.3
NO_X	0.2	0.7
PM-10	0.01	0.0
SO_2	0.0055	0.0
VOC	0.14	0.5

6.3.2.2 Passenger Vehicles

It is anticipated that the residential and commercial growth in the affected area will lead to increased motor vehicle use. RTP calculated the associated increases in motor vehicle exhaust emissions within the affected area by applying a growth ratio of 6.7 percent to the 2001 area-wide inventory of emissions from on-road vehicles. This is a very conservative approach in two respects. First, RTP made no attempt to discount the significant portion of the area-wide inventory that is associated with existing industrial and commercial activity, including farming. Second, no correction was made for the significant reductions in motor vehicle exhaust emissions that will occur due to new clean fuels regulations and engine emission standards relative to the 2001 emission inventory. Motor vehicle emissions within the affected area are summarized in Table 6.3-3.

TABLE 6.3-3. Motor Vehicle Exhaust Emissions

Pollutant	2001 Emissions (tons/yr)	Emissions Increase (tons/yr)
CO	122,022	8,591.0
NO_X	14,006	986.1
PM-10	381	26.8
SO_2	477	33.6
VOC	8,449	594.9

6.3.3 Other Area Source Emissions

It is anticipated that residential and commercial growth in the affected area will lead to increased emissions from various categories of area source emissions. These categories include residential and commercial fuel combustion, solvent usage, gasoline and diesel fuel storage and transport, and waste disposal. RTP calculated the associated emissions increases within the affected area by applying a growth ratio of 6.7 percent to the 2001 area-wide inventory of emissions from area sources, excluding only those categories that are not reasonably expected to be impacted by the HEC. These categories, as listed in the 2001 inventory, are as follows:

- "Industrial fuel combustion"
- "Other industrial processes"
- "Off-highway vehicles"
- "Miscellaneous," with respect to particulate matter emissions only, because those emissions are overwhelmingly associated with agricultural operations.

Area source emissions within the affected area are summarized in Table 6.3-4.

TABLE 6.3-4. Area Source Emissions

Pollutant	2001 Emissions (tons/yr)	Emissions Increase (tons/yr)
CO	8,429	593.4
NO_X	1,382	97.3
PM-10	1,410	99.3
SO_2	833	58.7
VOC	19,405	1,366.2

6.3.4 Total Emissions Growth

Table 6.3-5 summarizes the anticipated increases in emissions within the affected area due to residential and commercial growth associated with the HEC and provides a comparison with the existing emissions inventory in the area.

TABLE 6.3-5. Emissions Increases from Associated Residential and Commercial Growth

Pollutant	Emissions Increase (tons/yr)	2001 Emissions Inventory (tons/yr)	Relative Increase (percent)
CO	9,235.7	176,740	5.23
NO_X	1,084.0	58,622	1.85
PM-10	126.1	96,822	0.13
SO_2	92.3	51,111	0.18
VOC	1,961.5	32,854	5.97

6.4 Air Quality Impacts

As shown in Table 6.3-5, residential and commercial growth associated with the HEC is expected to result in slight increases in air pollutant emissions in the surrounding area. These emissions increases are expected to be broadly dispersed throughout the fifteen-county, tri-state Siouxland region. These emissions increases can reasonably be expected to result in roughly proportional increases in ambient air pollutant concentrations throughout the affected region. Because the anticipated emissions increases are small in relation to the existing emissions inventory, the impact on ambient air pollutant concentrations will not be significant; no adverse impacts are anticipated.

In fact, the air quality impacts due to the associated residential and commercial growth are anticipated to be less than the amount of the high bias introduced into the HEC air quality impacts analysis documented in Appendix E to this permit application. As suggested by the

South Dakota DENR, the background pollutant concentrations used in the dispersion modeling analyses are monitored values from Sioux Falls, South Dakota (for pollutants other than CO) and from Omaha, Nebraska (for CO). This is a highly conservative approach, as these ambient monitors are located in urbanized areas with much greater emissions density than most of the Siouxland region affected by the HEC project. Even with the emissions increases in Table 6.3-5, the emissions density throughout most of the affected area will remain well below that in the Sioux Falls area. The background concentrations used in the HEC ambient air quality impacts analysis are conservative even with respect to the anticipated background concentrations following the construction of the HEC.

Chapter 7. Class I Area Impacts Analysis

7.1 Distance to Class I Areas

There are no Class I areas located within 400 kilometers of the proposed HEC petroleum refinery. The closest Class I areas are as follows:

- Badlands National Park located in southwestern South Dakota, approximately 430 kilometers to the west-northwest of the proposed Union County site;
- Wind Cave National Park located in southwestern South Dakota, approximately 540 kilometers to the west of the proposed Union County site; and
- Theodore Roosevelt National Park, approximately 650 kilometers to the northwest of the proposed Union County site.

No air quality impacts at any Class I area could reasonably be expected to result from the proposed facility given such a great distance. Accordingly, no dispersion modeling analysis for Class I impacts has been performed.

Chapter 8. Case-by-Case Maximum Achievable Control Technology ("MACT")

As discussed in Section 3.3.7 herein, case-by-case MACT requirements are applicable to Hazardous Air Pollutant ("HAP") emissions from all process heaters at the proposed HEC petroleum refinery. This requirement is applicable because the NESHAP promulgated by U.S. EPA for process heaters at subpart DDDDD of 40 CFR part 63 was recently vacated by the D.C. Circuit Court of Appeals.

8.1 Case-by-Case MACT Overview

8.1.1 Definition of MACT

Pursuant to 40 CFR § 63.43(d), case-by-case MACT must meet the following requirements:

> (1) The MACT emission limitation or MACT requirements recommended by the applicant and approved by the permitting authority shall not be less stringent than the emission control which is achieved in practice by the best controlled similar source, as determined by the permitting authority.
>
> (2) Based upon available information, as defined in this subpart, the MACT emission limitation and control technology (including any requirements under paragraph (d)(3) of this section) recommended by the applicant and approved by the permitting authority shall achieve the maximum degree of reduction in emissions of HAP which can be achieved by utilizing those control technologies that can be identified from the available information, taking into consideration the costs of achieving such emission reduction and any non-air quality health and environmental impacts and energy requirements associated with the emission reduction.
>
> (3) The applicant may recommend a specific design, equipment, work practice, or operational standard, or a combination thereof, and the permitting authority may approve such a standard if the permitting authority specifically determines that it is not feasible to prescribe or enforce an emission limitation under the criteria set forth in section 112(h)(2) of the Act.
>
> (4) If the Administrator has either proposed a relevant emission standard pursuant to section 112(d) or section 112(h) of the Act or adopted a presumptive MACT determination for the source category which includes the constructed or reconstructed major source, then the MACT requirements applied to the constructed or reconstructed major source shall have considered those MACT emission limitations and requirements of the proposed standard or presumptive MACT determination.

The emissions limitations described in paragraph (d)(1) are frequently referred to as the "MACT floor," and those described in paragraph (d)(2) are frequently referred to as "beyond the floor."

8.1.2 Information Required for Case-by-Case MACT Determinations

Pursuant to 40 CFR § 63.43(e), applications for case-by-case MACT determinations must include certain specific information. This permit application includes all required information, as described below.

8.1.2.1 Project Information

General information regarding the applicant and the project is provided in Chapters 1 and 2 herein, including the following:

- The name and physical location of the proposed major source,
- A brief description of the proposed major source,
- The expected commencement date for construction of the proposed major source,
- The expected completion date for construction of the proposed major source, and
- The anticipated date of start-up for the proposed major source.

8.1.2.2 Regulatory Information

Regulatory information is provided in Chapter 3 herein, including the following:

- Identification of the listed source categories in which the proposed major source is included, and
- Any federally enforceable emission limitations applicable to the proposed major source.

8.1.2.3 Emissions Information

Emissions information is provided in Chapter 5 herein, including the following:

- The maximum and expected utilization of capacity of the proposed major source, and
- The estimated emission rate for each HAP emitted by the proposed major source.

8.1.2.4 Control Technologies and MACT Emissions Limitations

The control technologies proposed by the HEC for the petroleum refinery process heaters, when properly operated and maintained, will meet the MACT emission limitations as determined in accordance with § 63.43(d). The proposed control technologies are described in Section 9.1.4 herein. The descriptions provided include the following information:

- Technical information on the design, operation, size, and estimated control efficiency of each control technology;
- A recommended emission limitation for the proposed major source; and
- Supporting documentation including identification of alternative control technologies considered by the applicant to meet the emission limitation, and analysis of cost and non-

air quality health environmental impacts or energy requirements for the selected control technology.

8.1.3 Consideration of Subpart DDDDD Requirements

As described previously, 40 CFR § 63.43(d)(4) requires that case-by-case MACT determinations must take into consideration emissions standards in NESHAP rules that have been proposed by U.S. EPA for the pertinent source category. As was also described previously, case-by-case MACT requirements are applicable to the proposed HEC refinery process heaters only because the subpart DDDDD rule applicable to these heaters, proposed by U.S. EPA in January 2003 and promulgated in September 2004, was recently vacated by the D.C. Circuit Court of Appeals. The rule was vacated due to issues regarding whether boilers and process heaters that burn solid waste should be subject; the emissions standards applicable to gas-fired process heaters such as those at the HEC refinery did not factor into the court's decision to vacate this rule. However, the process that U.S. EPA used to decide whether to establish "no emissions reductions" as the MACT floor in certain circumstances was also recently criticized by the same court in a separate action[11] and, as a result, U.S. EPA had requested the court to vacate portions of the subpart DDDDD rule even prior to the court's decision to vacate on other grounds.[12]

In preparing this application for case-by-case MACT determinations, RTP has considered the emissions standards included in subpart DDDDD. This consideration is influenced, necessarily, by the court's decisions regarding that rule and the process that U.S. EPA used to establish the emissions standards included. Nonetheless, the rulemaking process included an exhaustive data gathering exercise by U.S. EPA, including with respect to HAP emissions from gas-fired process heaters. Several aspects of that rulemaking are informative for the purposes of this case-by-case MACT analysis:

- The information gathered and considered by U.S. EPA, including emissions data and control technology implementation;
- The rationale and decisions regarding categorization and subcategorization, including creation of a subcategory for large gaseous fuel-fired units, which is the subcategory into which all process heaters at the HEC refinery would fall;
- The conclusions reached regarding availability and feasibility of add-on pollution control equipment; and
- The selected format for MACT emissions standards.

8.1.4 Methodology for Case-by-Case MACT Analyses

Unlike the PSD BACT requirement as described in Section 4.1.2 herein, there is little guidance establishing the procedure by which a case-by-case MACT determination is made. For the purposes of this analysis, RTP has used a procedure similar to the top-down BACT analysis procedure.

[11] *Sierra Club v EPA*. No. 03-1202. March 13, 2007.
[12] *Motion for Voluntary Partial Vacatur and Remand*. March 26, 2007.

In addition to the data gathered by U.S. EPA in the subpart DDDDD rulemaking, as discussed above, materials considered by RTP in identifying and evaluating available control options include the following:

- Entries in the RACT/BACT/ LAER Clearinghouse maintained by the U.S. EPA. This database is the most comprehensive and up-to-date listing of control technology determinations available.
- Control technology information and emissions data provided by other State permitting authorities.

8.2 Organic HAP Emissions

As noted in the BACT analysis for VOC in Section 4.2.4 herein, emissions of organic compounds from gas-fired process heaters occur due to incomplete combustion of hydrocarbons in refinery fuel gas.

8.2.1 Steps 1-4: Identify and Review Available Control Technologies

Other than techniques that can generally be described as "good combustion practices," including the use of advanced process controls, we have not identified any emission control technologies or techniques actually used to minimize organic HAP emissions from refinery fuel gas-fired process heaters. This is consistent with the conclusion reached by U.S. EPA in the subpart DDDDD rulemaking.

The only identified "beyond-the-floor" control technology is the use of oxidation catalyst. As described in detail in Section 4.2.3 herein, this technology is considered technically infeasible for the sulfur-bearing refinery fuel gas proposed to be combusted in these petroleum refinery process heaters.

8.2.2 Step 5: Establish MACT Emission Limits

There are numerous organic HAP compounds that are potentially emitted from gas-fired process heaters using good combustion practices, and there are very limited data characterizing the achievable emission rates associated with these practices. We have not identified any gas-fired process heaters that are subject to emission limitations specifically for organic HAP.

As noted by U.S. EPA in establishing MACT for organic HAP emissions from gas-fired process heaters under subpart DDDDD:

> [W]e consider monitoring and maintaining CO emission levels to be associated with minimizing emissions of organic HAP. Carbon monoxide is generally an indicator of incomplete combustion because CO will burn to carbon dioxide if adequate oxygen is available. Therefore, controlling CO emissions can be a mechanism for ensuring combustion efficiency and may be viewed as a kind of [good combustion practices]. As discussed previously in this preamble, CO is considered a surrogate for organic HAP emissions in the proposed rule.
> *
> *

> Therefore, the new source MACT floor level of control includes a CO work practice standard of 400 parts per million for large and limited use units, reflecting the MACT floor level of control for emissions of organic HAP.

Consistent with the approach used by U.S. EPA in establishing MACT for organic HAP emissions from gas-fired process heaters under subpart DDDDD, the proposed MACT emission limitations for organic HAP emissions from process heaters at the HEC refinery are enforceable limitations on CO emissions. The proposed emissions limitations for each heater are equal to the CO BACT limits presented in Section 4.2.3 herein. These limits are approximately 97 percent lower (*i.e.*, more stringent than) the 400 ppmv emission standard developed by U.S. EPA, which is equivalent to approximately 0.30 lb per MMBtu heat input.

As good combustion practices are inherent in the design of the process heaters at the HEC refinery, no control efficiency can be determined for this control measure.

8.3 Hydrogen Chloride Emissions

Hydrogen chloride emissions from combustion of refinery fuel gas in process heaters will occur as a result of trace concentrations of chlorine-containing compounds in the fuel. Chlorine in fuel gas can originate in a number of fuel gas producing units, but the Platforming Unit and the Oleflex Unit, both of which use chlorine-containing compounds in the catalyst regeneration process, are the primary contributors.

8.3.1 Steps 1-3: Identify and Rank Available Control Technologies

The two identified air pollution control techniques are fuel gas scrubbing and exhaust gas scrubbing. Both techniques are presumed to be technically feasible, although no exhaust gas scrubbing technique for hydrogen chloride emissions from refinery fuel gas combustion has been demonstrated in practice. The application of fuel gas scrubbing for chlorine-containing fuel gas streams is inherent in the design of the HEC refinery process heaters in order to minimize equipment fouling and corrosion, is commonly practiced, and represents the MACT floor. As discussed in more detail in Section 9.3.3, for the purposes of this analysis, the hydrogen chloride emission limit representing the MACT floor is presumed to be 0.0012 lb/MMBtu heat input. This is equivalent to an exhaust gas hydrogen chloride concentration of approximately 1.7 ppmv, dry basis, at three percent excess oxygen. At the MACT floor control level, the total hydrogen chloride emissions from combustion of refinery fuel gas in process heaters at the HEC refinery will be approximately 45 tons per year.

Two "beyond-the-floor" control options are potentially available: Scrubbing of all fuel gas streams, rather than just the fuel gas streams generated in process units that use chlorine-containing compounds in the process, and exhaust gas scrubbing. Fuel gas scrubbing is the more effective technique because it operates to remove chlorine compounds from the fuel gas streams; exhaust gas scrubbing technologies are less effective because the chlorine content is much lower due to dilution that results from combustion. Although this level of control has not been demonstrated in practice for a fuel gas stream, fuel gas scrubbing is presumed for this analysis to be capable of achieving 90 percent control, to an emission limit of 0.00012 lb/MMBtu.

Exhaust gas scrubbing is not considered a viable beyond-the-floor control option for this case-by-case MACT analysis because there are no data to support the premise that quantifiable further reductions in hydrogen chloride emissions are achievable beyond a baseline exhaust gas concentration of approximately 1.7 ppmv.

8.3.2 Step 4: Evaluate Impacts of "Beyond-the-Floor" Control Options

8.3.2.1 Fuel Gas Scrubbing

Assuming 90 percent control, to an emission limit of 0.00012 lb/MMBtu heat input, this control option would achieve a reduction in hydrogen chloride emissions of approximately 41 tons per year. RTP has received a budgetary estimate of $24 million for the installed cost of the adsorbent systems necessary to achieve this reduction by scrubbing of approximately 200 million standard cubic feet of fuel gas per day. The capital recovery cost alone, without consideration of adsorbent replacement costs or other operating costs, is approximately $2.6 million per year. The cost effectiveness is well in excess of $60,000 per ton of emission reduction, based only on recovering capital investment. This control option does not represent MACT because it would result in unacceptable economic impacts.

8.3.3 Step 5: Establish MACT Emission Limits

We have not identified any gas-fired process heaters that are subject to emission limitations for hydrogen chloride, but the use of of fuel gas scrubbing for chlorine-containing fuel gas streams is widely practiced and considered to be representative of the "MACT floor."

There are scarce data available regarding the hydrogen chloride emission levels achievable with fuel gas scrubbing. The data set assembled by U.S. EPA in the subpart DDDDD rulemaking process includes the results of one, three-run hydrogen chloride emission test at a refinery fuel gas combustion source. This test was performed on a boiler, but hydrogen chloride formation is almost entirely dependent upon fuel composition, so the test result is believed to be representative of process heater emissions levels. The average of the test results was 0.0012 lb/MMBtu heat input, with a standard deviation of 0.0008 lb/MMBtu. Based on these data, for the purposes of this case-by-case MACT analysis, a hydrogen chloride emission limit of 0.0012 lb/MMBtu for refinery fuel gas process heaters is presumed to be achievable using fuel gas scrubbing for chlorine-containing fuel gas streams.

As fuel gas scrubbing for chlorine-containing fuel gas streams is inherent in the design of the process heaters at the HEC refinery in order to minimize equipment fouling and corrosion, no control efficiency can be determined for this control measure.

8.4 HAP Metals Emissions

The particulate matter emitted from refinery fuel gas-fired heaters at the HEC refinery will include trace concentrations of HAP metals due to the presence of those metals in crude oil.

The only identified control option for HAP metals emissions from these heaters is adherence to good combustion practices. This is the same control technology that formed the basis for the particulate matter BACT determination presented in Section 4.2.5 herein. Accordingly, RTP proposes that PM-10 emissions be used as a surrogate for emissions of HAP metals and that the proposed PM-10 BACT emission limit of 0.0075 lb/MMBtu heat input (HHV) be established as the emission limit representing MACT.

Appendix A

Permit Application Forms

Appendix A
Permit Application Forms

Contents

E0472V1 – General Information and Certification of Applicant Form (1)

E1630V1 – Process Heaters (30)
E1639V1 – Selective Catalytic Reduction Systems (20)

E1633V1 – Catalyst Regenerators (3)
E1641V1 – Wet Scrubbers (3)

E1633V1 – Cooling Tower (1)
E1639V1 – Drift Eliminators (13)

E1633V1 – Sulfur Recovery Plant (1)
E1640V1 – Thermal Oxidizers (6)

E1635V1 – Storage Tanks (1)
Data Table (1)

E1633V1 – Product Loading Racks (2)
E1639V1 – Vapor Recovery Units (2)

E1633V1 – Wastewater Treatment Plant (1)
E1640V1 – Thermal Oxidizer (1)
E1639V1 – Selective Catalytic Reduction System (1)

E1633V1 – Materials Handling (4)
E1636V1 – Fabric Filters (7)

E1630V1 – Combined Cycle Gas Turbines (5)
E1639V1 – Oxidation Catalyst Systems (5)
E1639V1 – Selective Catalytic Reduction Systems (5)

E1630V1 – Diesel Engines (6)

South Dakota Department of Environment & Natural Resources
Protecting SD's Tomorrow...Today

Air Quality Permit Application Form
Title V (Part 70) Operating Permit

General Information Form
And
Certification of Applicant Form

SEND ALL MATERIALS TO:

SD Department of Environment and Natural Resources
Air Quality Program
523 East Capitol
Pierre, South Dakota 57501-3181

(Please complete shaded areas - if you have questions call (605) 773-3151)

A. GENERAL INFORMATION

If permit is being renewed or amended, give existing permit number:

1. Facility name: HYPERION ENERGY CENTER - HYPERION REFINING LLC

2. Mailing address:

Street and/or box number: 1350 PREMIER PLACE, 5910 N. CENTRAL EXPRESSWAY

City, state, zip code: DALLAS TEXAS 75206

3. Facility location (if plant is portable, enter location at time of submittal):

Street and city:

Legal description and county: 316TH STREET AND 474TH AVENUE UNION COUNTY

(Quarter, Section, Township, Range)

4. Permit contact:

Name/title: COLIN CAMPBELL

Telephone number: (919) 845-1422

5. Facility contact, if different than permit contact (Person to contact for arranging inspections):

Name/title:

Telephone number:

6. Responsible official:

Name/title: PRESTON PHILLIPS / VP

Telephone number: (214) 750-4336

A responsible official is defined as a president, vice president, secretary, or treasurer for a corporation; general partner or the proprietor for a partnership; and principal executive officer or ranking elected official for municipal, state, federal or public agency.

B. PLANT DESCRIPTION

1. Standard Industrial Classification Code (SIC code):

Primary SIC code: 2911 Secondary SIC code (if applicable):

Please contact the Department if unable to determine your SIC code.

2. Briefly describe the operations at the facility, including raw materials and finished products:

The Hyperion Energy Center (HEC) is a 400,000 BPD greenfield petroleum refinery and an integrated gasification combined cycle (IGCC) electric utility plant. The refinery is a highly-complex, full-conversion refinery that will produce clean transportation fuels such as ULSD and ULSG.

Please attach one copy, if available, of any prepared plans and the manufacturer's specifications of any equipment, including pollution control devices. If additional space is needed to describe operations, please attach the additional paper to this application.

3. A **new source or modification to an existing source** is required to demonstrate that the operation of the new source or modification will not prevent or interfere with the attainment or maintenance of an applicable ambient air quality standard. Please attach air dispersion modeling or other documents that will demonstrate the new source or modification will not prevent or interfere with the attainment or maintenance of an applicable ambient air quality standard.

Has air dispersion modeling been conducted (please check one)? ◉ Yes ○ No

If air dispersion modeling has been conducted, please attach a copy of the report to this application unless the Department has a copy already.

C. COMPLIANCE PLAN

If it is anticipated that a permitted unit will not be operating in compliance at the time of permit issuance, a proposed compliance plan shall be included with the application. The proposed compliance plan shall include a narrative description of the following:

1. The requirements (i.e., statutes, air quality rules, permit conditions, etc.) the source is not in compliance with at the time of submittal of this application or permit issuance;
2. How the facility intends to bring the unit(s) into compliance; and
3. A compliance schedule for when the source will achieve compliance with such requirements;

The compliance schedule must include a statement that progress reports will be submitted at least once every six months and must be at least as stringent as that contained in any judicial consent decree or administrative order to which the applicant is subject.

D. MAPS

For stationary sources only, please enclose a map or a drawing showing roadways, location of plant and the nearest residents in each direction from the source. Include other structures, which may be affected.

E. AIR QUALITY EMISSIONS SUMMARY

If air quality emissions are available, please complete the following table:

	Actual	Potential Controlled	Potential Uncontrolled
Pollutant	(tons per year)	(tons per year)	(tons per year)
Particulate		1,046	
Sulfur Dioxide		863	
Nitrogen Oxide		773	
Carbon Monoxide		1,999	
Volatile Organic Compounds		473	
Hazardous Air Pollutants (if applicable)			

Remember that potential emissions are calculated assuming that the permitted unit is operated 24 hours per day, 7 days per week, 52 weeks per year at maximum design capacity. Attach all calculations, MSDS sheets for all products containing volatile organic compounds and/or hazardous air pollutants, and other supporting documentation.

Please contact the Department if assistance is needed for calculating emissions for the permitted units such as emission factors, clarifying what potential emissions are, efficiency for control equipment, etc.

F. ADDITIONAL FORMS

1. The following forms must be completed for each piece of specific equipment at the facility and submitted with this form:

Boiler	Incinerator	Kiln Dryer
Miscellaneous Process	Paint Booth	Storage Tank

2. The following forms must be completed for each piece of specific air control equipment at the facility and submitted with this form:

Baghouse	Cyclone	Electrostatic Precipitator
Miscellaneous Control	Thermo Oxidizer	Wet Scrubber

3. A list of insignificant activities must be identified in this application. The insignificant activity form must be completed and submitted along with this application.

G. CERTIFICATION OF COMPLIANCE

I certify the following:

1. The methods such as monitoring, record keeping, reporting, and stack test performance results described within this application shall be used to determine continuous or intermittent compliance;
2. A compliance certification document will be submitted to the Department at least annually or at other times designated by the Department for the duration of the permit;
3. The source is in compliance and will continue to demonstrate compliance with all applicable requirements, except for those designated in the attached compliance plan (if applicable); and
4. This application is submitted in accordance with the provisions of the South Dakota Codified Laws 34A-1 and Administrative Rules of South Dakota 74:36. To the best of my knowledge, after reasonable inquiry, the statements and information contained in the application and supporting documents are true, accurate, and complete. In accordance with South Dakota Codified Laws 1-40-27, I have also enclosed a completed Certification of Applicant form.

Signature:		12-17-2007
Print Name:	PRESTON PHILLIPS	Date

Responsible Official

Department of Environment & Natural Resources
Protecting SD's Tomorrow...Today

CERTIFICATION OF APPLICANT

(please complete shaded areas - if you have questions call (605) 773-3151)

In the Matter of the Application of	HYPERION ENERGY CENTER - HYPERION
	(Facility Name)
State of	SOUTH DAKOTA
County of	UNION COUNTY

I, PRESTON PHILLIPS, the applicant in the above matter after being duly sworn upon oath hereby certify the following information in regard to this application:

South Dakota Codified Laws Section 1-40-27 provides:

"The secretary may reject an application for any permit filed pursuant to Titles 34A or 45, including any application by any concentrated swine feeding operation for authorization to operate under a general permit, upon making a specific finding that:

(1) The applicant is unsuited or unqualified to perform the obligations of a permit holder based upon a finding that the applicant, any officer, director, partner or resident general manager of the facility for which application has been made:

(a) Has intentionally misrepresented a material fact in applying for a permit;

(b) Has been convicted of a felony or other crime involving moral turpitude;

(c) Has habitually and intentionally violated environmental laws of any state or the United States which have caused significant and material environmental damage;

(d) Has had any permit revoked under the environmental laws of any state or the United States; or

(e) Has otherwise demonstrated through clear and convincing evidence of previous actions that the applicant lacks the necessary good character and competency to reliably carry out the obligations imposed by law upon the permit holder; or

(2) The application substantially duplicates an application by the same applicant denied within the past five years which denial has not been reversed by a court of competent jurisdiction. Nothing in this subdivision may be construed to prohibit an applicant from submitting a new application for a permit previously denied, if the new application represents a good faith attempt by the applicant to correct the deficiencies that served as the basis for the denial in the original application.

All applications filed pursuant to Titles 34A and 45 shall include a certification, sworn to under oath and signed by the applicant, that he is not disqualified by reason of this section from obtaining a permit. In the absence of evidence to the contrary, that certification shall constitute a prima facie showing of the suitability and qualification of the applicant. If at any point in the application review, recommendation or hearing process, the secretary finds the applicant has intentionally made any material misrepresentation of fact in regard to this certification, consideration of the application may be suspended and the application may be rejected as provided for under this section.

Applications rejected pursuant to this section constitute final agency action upon that application and may be appealed to circuit court as provided for under chapter 1-26."

Pursuant to SDCL 1-40-27, I certify that I have read the forgoing provision of state law, and that I am not disqualified by reason of that provision from obtaining the permit for which application has been made.

Dated ~~this~~ 17th, day of December, 20 07

Applicant (signature)

Subscribed and sworn before me this:

Dated this 17th, day of December, 20 07

Dina J. Cioffre

Notary Public (signature)

My commission expires: 01/27/2011

DINA J CIOFFRE
Notary Public, State of Texas
My Commission Expires
January 27, 2011

(SEAL)

PLEASE ATTACH SHEET DISCLOSING ALL FACTS PERTAINING TO SDCL 1-40-27 (1) (a) THROUGH (e).
ALL VIOLATIONS MUST BE DISCLOSED, BUT WILL NOT AUTOMATICALLY RESULT IN THE REJECTION OF AN APPLICATION.

South Dakota Department of Environment & Natural Resources
Protecting SD's Tomorrow...Today

Air Quality Permit Application Form

Boiler Turbine or Furnace

This form is to be submitted, if necessary, along with the Title V (Part 70) Operating Permit or Minor Operating Permit.
(please complete shaded areas)

1. Facility identification (i.e., Boiler #1, Unit #1, etc): No. 1 Atmospheric Crude Charge Heater
2. Manufacturer: to be determined Manufacture date: n/a
3. Model number: to be determined
4. Type (i.e., steam boiler, simple cycle combustion turbine, generator, etc.)

process heater

5. Maximum designed operating rate (name plate):

530.2 million Btus per hour heat input
or horsepower with boiler efficiency:
or kilowatts with boiler efficiency:

6. Check the appropriate box(es) for primary and secondary fuels:

☐ Natural gas ☐ Propane
☐ Distillate oil Sulfur content Weight percent
☐ Residual oil Sulfur content Weight percent
☐ Bituminous Coal ☐ Subbituminous Coal ☐ Lignite Coal
Coal sulfur content Weight percent Coal ash content Weight percent
☑ Other (please specify) refinery fuel gas

7. Has a stack test been conducted (check appropriate box)? ☐ Yes ☑ No

If a stack test has been conducted, please attach a copy of the most recent stack test report to this application. If the Department already has a copy of the most recent stack test, please specify the date of most recent stack test.

Date of most recent stack test:

Control Equipment: If applicable, types of air pollution control equipment (Examples: baghouse, cyclone, wet scrubber, electrostatic precipitator, thermal oxidizer, miscellaneous control device, etc.).

SCR

Please complete the appropriate air quality permit application form for each type of control equipment that controls air emissions from this operation.

Stack Information: If this application is a renewal, contact the air program. We may have this information.

X- Coordinate or Easting:		feet		meters
Y- Coordinate or Northing:		feet		meters
Base Elevation of Stack:		feet		meters
Stack Height:		feet		meters
Exit Stack Diameter		feet		meters
Exit Stack Temperature		degrees Fahrenheit		

Exit Stack Velocity and/or Flow Rate:

Velocity:		feet per second		meters per second

and/or

Flow Rate:		actual cubic feet per minute		actual cubic meters per second

No. 1 Atmospheric Crude Charge Heater exhausts to atmosphere through SCR system. See attached E1639V1 form for stack parameters.

SD EForm - 1639 V1

Air Quality Permit Application Form

Miscellaneous Control Device

This form is to be submitted, if necessary, along with the Title V (Part 70) Operating Permit, Minor Operating Permit, or the General Permits.

(please complete shaded areas)

Describe the miscellaneous control device and how it works:

Ammonia is injected into the flue gas upstream of a catalytic reactor, where the catalyst promotes a reduction reaction that converts NOx to molecular nitrogen.

Equipment and processes served by this baghouse (please list all equipment and processes):

	Equipment and Processes
1.	No. 1 Atmospheric Crude Charge Heater
2.	
3.	
4.	
5.	

Manufacturer Information:

Manufacturer?	to be determined (tbd)		
Manufacturer date?	tbd	Installation date?	tbd
Manufacturer's designed control efficiency?	tbd	%	

Miscellaneous Control Device Operation and Maintenance:

Pressure drop across control unit?	n/a	Inches water (minimum)	n/a	inches water (maximum)
Inlet Temperature?	tbd	Fahrenheit (minimum)	tbd	Fahrenheit (maximum)
Outlet Temperature?	n/a	Fahrenheit (minimum)	n/a	Fahrenheit (maximum)

Describe maintenance of control unit (use of visual inspections, maintenance schedule, etc.):

to be determined

Stack Information: If this application is a renewal, contact the air program. We may have this information.

X- Coordinate or Easting: [1]		feet	or	686,266.88	meters
Y- Coordinate or Northing: [1]		feet	or	4,742,708.00	meters
Base Elevation of Stack: [1]	1,220.00	feet	or		meters
Stack Height:	175.00	feet	or		meters
Exit Stack Diameter	13.00	feet	or		meters
Exit Stack Temperature	426.00	degrees Fahrenheit			

Exit Stack Velocity and/or Flow Rate:

Velocity:	21.20	feet per second		meters per second

and/or

Flow Rate:		actual cubic feet per minute		actual cubic meters per second

[1] - Portable asphalt plants, rock crushers, or concrete plants do not have to provide the requested information in these categories.

South Dakota Department of Environment & Natural Resources
Protecting SD's Tomorrow...Today

Air Quality Permit Application Form

Boiler Turbine or Furnace

This form is to be submitted, if necessary, along with the Title V (Part 70) Operating Permit or Minor Operating Permit.
(please complete shaded areas)

1. Facility identification (i.e., Boiler #1, Unit #1, etc): No. 2 Atmospheric Crude Charge Heater
2. Manufacturer: to be determined Manufacture date: n/a
3. Model number: to be determined
4. Type (i.e., steam boiler, simple cycle combustion turbine, generator, etc.)

process heater

5. Maximum designed operating rate (name plate):

530.2 million Btus per hour heat input
or horsepower with boiler efficiency:
or kilowatts with boiler efficiency:

6. Check the appropriate box(es) for primary and secondary fuels:

☐ Natural gas ☐ Propane
☐ Distillate oil Sulfur content Weight percent
☐ Residual oil Sulfur content Weight percent
☐ Bituminous Coal ☐ Subbituminous Coal ☐ Lignite Coal
Coal sulfur content Weight percent Coal ash content Weight percent
☑ Other (please specify) refinery fuel gas

7. Has a stack test been conducted (check appropriate box)? ☐ Yes ☑ No

If a stack test has been conducted, please attach a copy of the most recent stack test report to this application. If the Department already has a copy of the most recent stack test, please specify the date of most recent stack test.

Date of most recent stack test:

Control Equipment: If applicable, types of air pollution control equipment (Examples: baghouse, cyclone, wet scrubber, electrostatic precipitator, thermal oxidizer, miscellaneous control device, etc.).

SCR

Please complete the appropriate air quality permit application form for each type of control equipment that controls air emissions from this operation.

Stack Information: If this application is a renewal, contact the air program. We may have this information.

X- Coordinate or Easting:		feet		meters
Y- Coordinate or Northing:		feet		meters
Base Elevation of Stack:		feet		meters
Stack Height:		feet		meters
Exit Stack Diameter		feet		meters
Exit Stack Temperature		degrees Fahrenheit		

Exit Stack Velocity and/or Flow Rate:

Velocity:		feet per second		meters per second

and/or

Flow Rate:		actual cubic feet per minute		actual cubic meters per second

No. 2 Atmospheric Crude Charge Heater exhausts to atmosphere through SCR system. See attached E1639V1 form for stack parameters.

SD EForm - 1639 V1

Air Quality Permit Application Form

Miscellaneous Control Device

This form is to be submitted, if necessary, along with the Title V (Part 70) Operating Permit, Minor Operating Permit, or the General Permits.

(please complete shaded areas)

Describe the miscellaneous control device and how it works:

Ammonia is injected into the flue gas upstream of a catalytic reactor, where the catalyst promotes a reduction reaction that converts NOx to molecular nitrogen.

Equipment and processes served by this baghouse (please list all equipment and processes):

	Equipment and Processes
1.	No. 2 Atmospheric Crude Charge Heater
2.	
3.	
4.	
5.	

Manufacturer Information:

Manufacturer?	to be determined (tbd)		
Manufacturer date?	tbd	Installation date?	tbd
Manufacturer's designed control efficiency?	tbd	%	

Miscellaneous Control Device Operation and Maintenance:

Pressure drop across control unit?	n/a	Inches water (minimum)	n/a	inches water (maximum)
Inlet Temperature?	tbd	Fahrenheit (minimum)	tbd	Fahrenheit (maximum)
Outlet Temperature?	n/a	Fahrenheit (minimum)	n/a	Fahrenheit (maximum)

Describe maintenance of control unit (use of visual inspections, maintenance schedule, etc.):

to be determined

Stack Information: If this application is a renewal, contact the air program. We may have this information.

X- Coordinate or Easting: [1]		feet	or	686,521.00	meters
Y- Coordinate or Northing: [1]		feet	or	4,742,715.00	meters
Base Elevation of Stack: [1]	1,220.00	feet	or		meters
Stack Height:	175.00	feet	or		meters
Exit Stack Diameter	13.00	feet	or		meters
Exit Stack Temperature	426.00	degrees Fahrenheit			

Exit Stack Velocity and/or Flow Rate:

Velocity:	21.20	feet per second		meters per second

and/or

Flow Rate:		actual cubic feet per minute		actual cubic meters per second

[1] - Portable asphalt plants, rock crushers, or concrete plants do not have to provide the requested information in these categories.

South Dakota Department of Environment & Natural Resources
Protecting SD's Tomorrow...Today

Air Quality Permit Application Form

Boiler Turbine or Furnace

This form is to be submitted, if necessary, along with the Title V (Part 70) Operating Permit or Minor Operating Permit.
(please complete shaded areas)

1. Facility identification (i.e., Boiler #1, Unit #1, etc): No. 1 Vacuum Charge Heater
2. Manufacturer: to be determined | Manufacture date: n/a
3. Model number: to be determined
4. Type (i.e., steam boiler, simple cycle combustion turbine, generator, etc.)

process heater

5. Maximum designed operating rate (name plate):

	214.7	million Btus per hour heat input	
or		horsepower with boiler efficiency:	
or		kilowatts with boiler efficiency:	

6. Check the appropriate box(es) for primary and secondary fuels:

☐	Natural gas		☐	Propane	
☐	Distillate oil	Sulfur content		Weight percent	
☐	Residual oil	Sulfur content		Weight percent	
☐	Bituminous Coal	☐	Subbituminous Coal	☐	Lignite Coal
Coal sulfur content		Weight percent	Coal ash content		Weight percent
☑	Other (please specify)	refinery fuel gas			

7. Has a stack test been conducted (check appropriate box)? ☐ Yes ☑ No

If a stack test has been conducted, please attach a copy of the most recent stack test report to this application. If the Department already has a copy of the most recent stack test, please specify the date of most recent stack test.

Date of most recent stack test:

Control Equipment: If applicable, types of air pollution control equipment (Examples: baghouse, cyclone, wet scrubber, electrostatic precipitator, thermal oxidizer, miscellaneous control device, etc.).

SCR

Please complete the appropriate air quality permit application form for each type of control equipment that controls air emissions from this operation.

Stack Information: If this application is a renewal, contact the air program. We may have this information.

X- Coordinate or Easting:		feet		meters
Y- Coordinate or Northing:		feet		meters
Base Elevation of Stack:		feet		meters
Stack Height:		feet		meters
Exit Stack Diameter		feet		meters
Exit Stack Temperature		degrees Fahrenheit		

Exit Stack Velocity and/or Flow Rate:

Velocity:		feet per second		meters per second

and/or

Flow Rate:		actual cubic feet per minute		actual cubic meters per second

No. 1 Vacuum Charge Heater exhausts to atmosphere through SCR system. See attached E1639V1 form for stack parameters.

Air Quality Permit Application Form

Miscellaneous Control Device

This form is to be submitted, if necessary, along with the Title V (Part 70) Operating Permit, Minor Operating Permit, or the General Permits.

(please complete shaded areas)

Describe the miscellaneous control device and how it works:

Ammonia injected is into the flue gas upstream of a catalytic reactor, where the catalyst promotes a reduction reaction that converts NOx to molecular nitrogen.

Equipment and processes served by this baghouse (please list all equipment and processes):

	Equipment and Processes
1.	No. 1 Vacuum Charge Heater
2.	
3.	
4.	
5.	

Manufacturer Information:

Manufacturer?	to be determined (tbd)		
Manufacturer date?	tbd	Installation date?	tbd
Manufacturer's designed control efficiency?	tbd	%	

Miscellaneous Control Device Operation and Maintenance:

Pressure drop across control unit?	n/a	Inches water (minimum)	n/a	inches water (maximum)
Inlet Temperature?	tbd	Fahrenheit (minimum)	tbd	Fahrenheit (maximum)
Outlet Temperature?	n/a	Fahrenheit (minimum)	n/a	Fahrenheit (maximum)

Describe maintenance of control unit (use of visual inspections, maintenance schedule, etc.):

to be determined

Stack Information: If this application is a renewal, contact the air program. We may have this information.

X- Coordinate or Easting: [1]		feet	or	686,195.81	meters
Y- Coordinate or Northing: [1]		feet	or	4,742,709.00	meters
Base Elevation of Stack: [1]	1,220.00	feet	or		meters
Stack Height:	175.00	feet	or		meters
Exit Stack Diameter	8.00	feet	or		meters
Exit Stack Temperature	426.00	degrees Fahrenheit			

Exit Stack Velocity and/or Flow Rate:

Velocity:	22.70	feet per second		meters per second

and/or

Flow Rate:		actual cubic feet per minute		actual cubic meters per second

[1] - Portable asphalt plants, rock crushers, or concrete plants do not have to provide the requested information in these categories.

SD EForm - 1630 V1

South Dakota Department of Environment & Natural Resources
Protecting SD's Tomorrow...Today

Air Quality Permit Application Form

Boiler Turbine or Furnace

This form is to be submitted, if necessary, along with the Title V (Part 70) Operating Permit or Minor Operating Permit.

(please complete shaded areas)

1. Facility identification (i.e., Boiler #1, Unit #1, etc): No. 2 Vacuum Charge Heater
2. Manufacturer: to be determined | Manufacture date: n/a
3. Model number: to be determined
4. Type (i.e., steam boiler, simple cycle combustion turbine, generator, etc.)

process heater

5. Maximum designed operating rate (name plate):

	214.7	million Btus per hour heat input	
or		horsepower with boiler efficiency:	
or		kilowatts with boiler efficiency:	

6. Check the appropriate box(es) for primary and secondary fuels:

☐	Natural gas		☐	Propane	
☐	Distillate oil	Sulfur content		Weight percent	
☐	Residual oil	Sulfur content		Weight percent	
☐	Bituminous Coal	☐	Subbituminous Coal	☐	Lignite Coal
Coal sulfur content		Weight percent	Coal ash content		Weight percent
☑	Other (please specify)	refinery fuel gas			

7. Has a stack test been conducted (check appropriate box)? ☐ Yes ☑ No

If a stack test has been conducted, please attach a copy of the most recent stack test report to this application. If the Department already has a copy of the most recent stack test, please specify the date of most recent stack test.

Date of most recent stack test:

Control Equipment: If applicable, types of air pollution control equipment (Examples: baghouse, cyclone, wet scrubber, electrostatic precipitator, thermal oxidizer, miscellaneous control device, etc.).

SCR

Please complete the appropriate air quality permit application form for each type of control equipment that controls air emissions from this operation.

Stack Information: If this application is a renewal, contact the air program. We may have this information.

X- Coordinate or Easting:		feet		meters
Y- Coordinate or Northing:		feet		meters
Base Elevation of Stack:		feet		meters
Stack Height:		feet		meters
Exit Stack Diameter		feet		meters
Exit Stack Temperature		degrees Fahrenheit		

Exit Stack Velocity and/or Flow Rate:

Velocity:		feet per second		meters per second

and/or

Flow Rate:		actual cubic feet per minute		actual cubic meters per second

No. 2 Vacuum Charge Heater exhausts to atmosphere through SCR system. See attached E1639V1 form for stack parameters.

Air Quality Permit Application Form

Miscellaneous Control Device

This form is to be submitted, if necessary, along with the Title V (Part 70) Operating Permit, Minor Operating Permit, or the General Permits.

(please complete shaded areas)

Describe the miscellaneous control device and how it works:

Ammonia is injected into the flue gas upstream of a catalytic reactor, where the catalyst promotes a reduction reaction that converts NOx to molecular nitrogen.

Equipment and processes served by this baghouse (please list all equipment and processes):

	Equipment and Processes
1.	No. 2 Vacuum Charge Heater
2.	
3.	
4.	
5.	

Manufacturer Information:

Manufacturer?	to be determined (tbd)		
Manufacturer date?	tbd	Installation date?	tbd
Manufacturer's designed control efficiency?	tbd	%	

Miscellaneous Control Device Operation and Maintenance:

Pressure drop across control unit?	n/a	Inches water (minimum)	n/a	inches water (maximum)
Inlet Temperature?	tbd	Fahrenheit (minimum)	tbd	Fahrenheit (maximum)
Outlet Temperature?	n/a	Fahrenheit (minimum)	n/a	Fahrenheit (maximum)

Describe maintenance of control unit (use of visual inspections, maintenance schedule, etc.):

to be determined

Stack Information: If this application is a renewal, contact the air program. We may have this information.

X- Coordinate or Easting: [1]		feet	or	686,448.56	meters
Y- Coordinate or Northing: [1]		feet	or	4,742,715.00	meters
Base Elevation of Stack: [1]	1,220.00	feet	or		meters
Stack Height:	175.00	feet	or		meters
Exit Stack Diameter	8.00	feet	or		meters
Exit Stack Temperature	426.00	degrees Fahrenheit			

Exit Stack Velocity and/or Flow Rate:

Velocity:	22.70	feet per second		meters per second

and/or

Flow Rate:		actual cubic feet per minute		actual cubic meters per second

[1] - Portable asphalt plants, rock crushers, or concrete plants do not have to provide the requested information in these categories.

South Dakota Department of Environment & Natural Resources
Protecting SD's Tomorrow...Today

Air Quality Permit Application Form

Boiler Turbine or Furnace

This form is to be submitted, if necessary, along with the Title V (Part 70) Operating Permit or Minor Operating Permit.
(please complete shaded areas)

1. Facility identification (i.e., Boiler #1, Unit #1, etc): Naphtha Hydrotreater Charge Heater
2. Manufacturer: to be determined Manufacture date: n/a
3. Model number: to be determined
4. Type (i.e., steam boiler, simple cycle combustion turbine, generator, etc.)

process heater

5. Maximum designed operating rate (name plate):

	199.6	million Btus per hour heat input	
or		horsepower with boiler efficiency:	
or		kilowatts with boiler efficiency:	

6. Check the appropriate box(es) for primary and secondary fuels:

☐	Natural gas		☐	Propane	
☐	Distillate oil	Sulfur content		Weight percent	
☐	Residual oil	Sulfur content		Weight percent	
☐	Bituminous Coal	☐	Subbituminous Coal	☐	Lignite Coal
Coal sulfur content		Weight percent	Coal ash content		Weight percent
☑	Other (please specify)	refinery fuel gas			

7. Has a stack test been conducted (check appropriate box)? ☐ Yes ☑ No

If a stack test has been conducted, please attach a copy of the most recent stack test report to this application. If the Department already has a copy of the most recent stack test, please specify the date of most recent stack test.

Date of most recent stack test:

Control Equipment: If applicable, types of air pollution control equipment (Examples: baghouse, cyclone, wet scrubber, electrostatic precipitator, thermal oxidizer, miscellaneous control device, etc.).

SCR

Please complete the appropriate air quality permit application form for each type of control equipment that controls air emissions from this operation.

Stack Information: If this application is a renewal, contact the air program. We may have this information.

X- Coordinate or Easting:		feet		meters
Y- Coordinate or Northing:		feet		meters
Base Elevation of Stack:		feet		meters
Stack Height:		feet		meters
Exit Stack Diameter		feet		meters
Exit Stack Temperature		degrees Fahrenheit		

Exit Stack Velocity and/or Flow Rate:

Velocity:		feet per second		meters per second

and/or

Flow Rate:		actual cubic feet per minute		actual cubic meters per second

Naphtha Hydrotreater Charge Heater exhausts to atmosphere through SCR system. See attached E1639V1 form for stack parameters.

Air Quality Permit Application Form

Miscellaneous Control Device

This form is to be submitted, if necessary, along with the Title V (Part 70) Operating Permit, Minor Operating Permit, or the General Permits.

(please complete shaded areas)

Describe the miscellaneous control device and how it works:

Ammonia is injected into the flue gas upstream of a catalytic reactor, where the catalyst promotes a reduction reaction that converts NOx to molecular nitrogen.

Equipment and processes served by this baghouse (please list all equipment and processes):

	Equipment and Processes
1.	Naphtha Hydrotreater Charge Heater
2.	
3.	
4.	
5.	

Manufacturer Information:

Manufacturer?	to be determined (tbd)		
Manufacturer date?	tbd	Installation date?	tbd
Manufacturer's designed control efficiency?	tbd	%	

Miscellaneous Control Device Operation and Maintenance:

Pressure drop across control unit?	n/a	Inches water (minimum)	n/a	inches water (maximum)
Inlet Temperature?	tbd	Fahrenheit (minimum)	tbd	Fahrenheit (maximum)
Outlet Temperature?	n/a	Fahrenheit (minimum)	n/a	Fahrenheit (maximum)

Describe maintenance of control unit (use of visual inspections, maintenance schedule, etc.):

to be determined

Stack Information: If this application is a renewal, contact the air program. We may have this information.

X- Coordinate or Easting: [1]		feet	or	686,332.94	meters
Y- Coordinate or Northing: [1]		feet	or	4,742,316.50	meters
Base Elevation of Stack: [1]	1,220.00	feet	or		meters
Stack Height:	175.00	feet	or		meters
Exit Stack Diameter	8.00	feet	or		meters
Exit Stack Temperature	460.00	degrees Fahrenheit			

Exit Stack Velocity and/or Flow Rate:

Velocity:	21.90	feet per second		meters per second

and/or

Flow Rate:		actual cubic feet per minute		actual cubic meters per second

[1] - Portable asphalt plants, rock crushers, or concrete plants do not have to provide the requested information in these categories.

South Dakota Department of Environment & Natural Resources
Protecting SD's Tomorrow...Today

Air Quality Permit Application Form

Boiler Turbine or Furnace

This form is to be submitted, if necessary, along with the Title V (Part 70) Operating Permit or Minor Operating Permit.
(please complete shaded areas)

1. Facility identification (i.e., Boiler #1, Unit #1, etc): Naphtha Hydrotreater Stripper Reboiler Htr
2. Manufacturer: to be determined | Manufacture date: n/a
3. Model number: to be determined
4. Type (i.e., steam boiler, simple cycle combustion turbine, generator, etc.)

process heater

5. Maximum designed operating rate (name plate):

	168.8	million Btus per hour heat input	
or		horsepower with boiler efficiency:	
or		kilowatts with boiler efficiency:	

6. Check the appropriate box(es) for primary and secondary fuels:

☐	Natural gas		☐	Propane	
☐	Distillate oil	Sulfur content		Weight percent	
☐	Residual oil	Sulfur content		Weight percent	
☐	Bituminous Coal	☐	Subbituminous Coal	☐	Lignite Coal
Coal sulfur content		Weight percent	Coal ash content		Weight percent
☑	Other (please specify)	refinery fuel gas			

7. Has a stack test been conducted (check appropriate box)? ☐ Yes ☑ No

If a stack test has been conducted, please attach a copy of the most recent stack test report to this application. If the Department already has a copy of the most recent stack test, please specify the date of most recent stack test.

Date of most recent stack test:

Control Equipment: If applicable, types of air pollution control equipment (Examples: baghouse, cyclone, wet scrubber, electrostatic precipitator, thermal oxidizer, miscellaneous control device, etc.).

SCR

Please complete the appropriate air quality permit application form for each type of control equipment that controls air emissions from this operation.

Stack Information: If this application is a renewal, contact the air program. We may have this information.

X- Coordinate or Easting:		feet		meters
Y- Coordinate or Northing:		feet		meters
Base Elevation of Stack:		feet		meters
Stack Height:		feet		meters
Exit Stack Diameter		feet		meters
Exit Stack Temperature		degrees Fahrenheit		

Exit Stack Velocity and/or Flow Rate:

Velocity:		feet per second		meters per second

and/or

Flow Rate:		actual cubic feet per minute		actual cubic meters per second

Naphtha Hydrotreater Stripper Reboiler Heater exhausts to atmosphere through SCR system. See attached E1639V1 form for stack parameters.

South Dakota Department of Environment & Natural Resources
Protecting SD's Tomorrow...Today

Air Quality Permit Application Form

Miscellaneous Control Device

This form is to be submitted, if necessary, along with the Title V (Part 70) Operating Permit, Minor Operating Permit, or the General Permits.

(please complete shaded areas)

Describe the miscellaneous control device and how it works:

Ammonia is injected into the flue gas upstream of a catalytic reactor, where the catalyst promotes a reduction reaction that converts NOx to molecular nitrogen.

Equipment and processes served by this baghouse (please list all equipment and processes):

	Equipment and Processes
1.	Naphtha Hydrotreater Stripper Reboiler Heater
2.	
3.	
4.	
5.	

Manufacturer Information:

Manufacturer?	to be determined (tbd)		
Manufacturer date?	tbd	Installation date?	tbd
Manufacturer's designed control efficiency?	tbd	%	

Miscellaneous Control Device Operation and Maintenance:

Pressure drop across control unit?	n/a	Inches water (minimum)	n/a	inches water (maximum)
Inlet Temperature?	tbd	Fahrenheit (minimum)	tbd	Fahrenheit (maximum)
Outlet Temperature?	n/a	Fahrenheit (minimum)	n/a	Fahrenheit (maximum)

Describe maintenance of control unit (use of visual inspections, maintenance schedule, etc.):

to be determined

Stack Information: If this application is a renewal, contact the air program. We may have this information.

X- Coordinate or Easting: [1]		feet	or	686,319.50	meters
Y- Coordinate or Northing: [1]		feet	or	4,742,316.50	meters
Base Elevation of Stack: [1]	1,220.00	feet	or		meters
Stack Height:	175.00	feet	or		meters
Exit Stack Diameter	7.00	feet	or		meters
Exit Stack Temperature	460.00	degrees Fahrenheit			

Exit Stack Velocity and/or Flow Rate:

Velocity:	24.20	feet per second		meters per second

and/or

Flow Rate:		actual cubic feet per minute		actual cubic meters per second

[1] - Portable asphalt plants, rock crushers, or concrete plants do not have to provide the requested information in these categories.

South Dakota Department of Environment & Natural Resources
Protecting SD's Tomorrow...Today

Air Quality Permit Application Form

Boiler Turbine or Furnace

This form is to be submitted, if necessary, along with the Title V (Part 70) Operating Permit or Minor Operating Permit.
(please complete shaded areas)

1. Facility identification (i.e., Boiler #1, Unit #1, etc): Naphtha Splitter Reboiler Heater
2. Manufacturer: to be determined | Manufacture date: n/a
3. Model number: to be determined
4. Type (i.e., steam boiler, simple cycle combustion turbine, generator, etc.)

process heater

5. Maximum designed operating rate (name plate):

	246.8	million Btus per hour heat input	
or		horsepower with boiler efficiency:	
or		kilowatts with boiler efficiency:	

6. Check the appropriate box(es) for primary and secondary fuels:

☐	Natural gas		☐	Propane	
☐	Distillate oil	Sulfur content		Weight percent	
☐	Residual oil	Sulfur content		Weight percent	
☐	Bituminous Coal	☐	Subbituminous Coal	☐	Lignite Coal
Coal sulfur content		Weight percent	Coal ash content		Weight percent
☑	Other (please specify)	refinery fuel gas			

7. Has a stack test been conducted (check appropriate box)? ☐ Yes ☑ No

If a stack test has been conducted, please attach a copy of the most recent stack test report to this application. If the Department already has a copy of the most recent stack test, please specify the date of most recent stack test.

Date of most recent stack test:

Control Equipment: If applicable, types of air pollution control equipment (Examples: baghouse, cyclone, wet scrubber, electrostatic precipitator, thermal oxidizer, miscellaneous control device, etc.).

SCR

Please complete the appropriate air quality permit application form for each type of control equipment that controls air emissions from this operation.

Stack Information: If this application is a renewal, contact the air program. We may have this information.

X- Coordinate or Easting:		feet		meters
Y- Coordinate or Northing:		feet		meters
Base Elevation of Stack:		feet		meters
Stack Height:		feet		meters
Exit Stack Diameter		feet		meters
Exit Stack Temperature		degrees Fahrenheit		

Exit Stack Velocity and/or Flow Rate:

Velocity:		feet per second		meters per second

and/or

Flow Rate:		actual cubic feet per minute		actual cubic meters per second

Naphtha Splitter Reboiler Heater exhausts to atmosphere through SCR system. See attached E1639V1 form for stack parameters.

SD EForm - 1639 V1

Air Quality Permit Application Form

Miscellaneous Control Device

This form is to be submitted, if necessary, along with the Title V (Part 70) Operating Permit, Minor Operating Permit, or the General Permits.

(please complete shaded areas)

Describe the miscellaneous control device and how it works:

Ammonia is injected into the flue gas upstream of a catalytic reactor, where the catalyst promotes a reduction reaction that converts NOx to molecular nitrogen.

Equipment and processes served by this baghouse (please list all equipment and processes):

	Equipment and Processes
1.	Naphtha Splitter Reboiler Heater
2.	
3.	
4.	
5.	

Manufacturer Information:

Manufacturer?	to be determined (tbd)		
Manufacturer date?	tbd	Installation date?	tbd
Manufacturer's designed control efficiency?	tbd	%	

Miscellaneous Control Device Operation and Maintenance:

Pressure drop across control unit?	n/a	Inches water (minimum)	n/a	inches water (maximum)
Inlet Temperature?	tbd	Fahrenheit (minimum)	tbd	Fahrenheit (maximum)
Outlet Temperature?	n/a	Fahrenheit (minimum)	n/a	Fahrenheit (maximum)

Describe maintenance of control unit (use of visual inspections, maintenance schedule, etc.):

to be determined

Stack Information: If this application is a renewal, contact the air program. We may have this information.

X- Coordinate or Easting: [1]		feet	or	686,305.38	meters
Y- Coordinate or Northing: [1]		feet	or	4,742,316.50	meters
Base Elevation of Stack: [1]	1,220.00	feet	or		meters
Stack Height:	175.00	feet	or		meters
Exit Stack Diameter	9.00	feet	or		meters
Exit Stack Temperature	460.00	degrees Fahrenheit			

Exit Stack Velocity and/or Flow Rate:

Velocity:	21.40	feet per second		meters per second

and/or

Flow Rate:		actual cubic feet per minute		actual cubic meters per second

[1] - Portable asphalt plants, rock crushers, or concrete plants do not have to provide the requested information in these categories.

South Dakota Department of Environment & Natural Resources
Protecting SD's Tomorrow...Today

Air Quality Permit Application Form

Boiler Turbine or Furnace

This form is to be submitted, if necessary, along with the Title V (Part 70) Operating Permit or Minor Operating Permit.
(please complete shaded areas)

1. Facility identification (i.e., Boiler #1, Unit #1, etc): Distillate Hydrotreater Feed Heater
2. Manufacturer: to be determined | Manufacture date: n/a
3. Model number: to be determined
4. Type (i.e., steam boiler, simple cycle combustion turbine, generator, etc.)

process heater

5. Maximum designed operating rate (name plate):

	140.6	million Btus per hour heat input	
or		horsepower with boiler efficiency:	
or		kilowatts with boiler efficiency:	

6. Check the appropriate box(es) for primary and secondary fuels:

☐	Natural gas		☐	Propane	
☐	Distillate oil	Sulfur content		Weight percent	
☐	Residual oil	Sulfur content		Weight percent	
☐	Bituminous Coal	☐	Subbituminous Coal	☐	Lignite Coal
Coal sulfur content		Weight percent	Coal ash content		Weight percent
☑	Other (please specify)	refinery fuel gas			

7. Has a stack test been conducted (check appropriate box)? ☐ Yes ☑ No

If a stack test has been conducted, please attach a copy of the most recent stack test report to this application. If the Department already has a copy of the most recent stack test, please specify the date of most recent stack test.

Date of most recent stack test:

Control Equipment: If applicable, types of air pollution control equipment (Examples: baghouse, cyclone, wet scrubber, electrostatic precipitator, thermal oxidizer, miscellaneous control device, etc.).

SCR

Please complete the appropriate air quality permit application form for each type of control equipment that controls air emissions from this operation.

Stack Information: If this application is a renewal, contact the air program. We may have this information.

X- Coordinate or Easting:		feet		meters
Y- Coordinate or Northing:		feet		meters
Base Elevation of Stack:		feet		meters
Stack Height:		feet		meters
Exit Stack Diameter		feet		meters
Exit Stack Temperature		degrees Fahrenheit		

Exit Stack Velocity and/or Flow Rate:

Velocity:		feet per second		meters per second

and/or

Flow Rate:		actual cubic feet per minute		actual cubic meters per second

Distillate Hydrotreater Feed Heater exhausts to atmosphere through SCR system. See attached E1639V1 form for stack parameters.

SD EForm - 1639 V1

Air Quality Permit Application Form

Miscellaneous Control Device

This form is to be submitted, if necessary, along with the Title V (Part 70) Operating Permit, Minor Operating Permit, or the General Permits.

(please complete shaded areas)

Describe the miscellaneous control device and how it works:

Ammonia is injected into the flue gas upstream of a catalytic reactor, where the catalyst promotes a reduction reaction that converts NOx to molecular nitrogen.

Equipment and processes served by this baghouse (please list all equipment and processes):

	Equipment and Processes
1.	Distillate Hydrotreater Feed Heater
2.	
3.	
4.	
5.	

Manufacturer Information:

Manufacturer?	to be determined (tbd)		
Manufacturer date?	tbd	Installation date?	tbd
Manufacturer's designed control efficiency?	tbd	%	

Miscellaneous Control Device Operation and Maintenance:

Pressure drop across control unit?	n/a	Inches water (minimum)	n/a	inches water (maximum)
Inlet Temperature?	tbd	Fahrenheit (minimum)	tbd	Fahrenheit (maximum)
Outlet Temperature?	n/a	Fahrenheit (minimum)	n/a	Fahrenheit (maximum)

Describe maintenance of control unit (use of visual inspections, maintenance schedule, etc.):

to be determined

Stack Information: If this application is a renewal, contact the air program. We may have this information.

X- Coordinate or Easting: [1]		feet	or	686,426.88	meters
Y- Coordinate or Northing: [1]		feet	or	4,742,313.00	meters
Base Elevation of Stack: [1]	1,220.00	feet	or		meters
Stack Height:	175.00	feet	or		meters
Exit Stack Diameter	6.00	feet	or		meters
Exit Stack Temperature	426.00	degrees Fahrenheit			

Exit Stack Velocity and/or Flow Rate:

Velocity:	26.40	feet per second		meters per second

and/or

Flow Rate:		actual cubic feet per minute		actual cubic meters per second

[1] - Portable asphalt plants, rock crushers, or concrete plants do not have to provide the requested information in these categories.

South Dakota Department of Environment & Natural Resources
Protecting SD's Tomorrow...Today

Air Quality Permit Application Form

Boiler Turbine or Furnace

This form is to be submitted, if necessary, along with the Title V (Part 70) Operating Permit or Minor Operating Permit.
(please complete shaded areas)

1. Facility identification (i.e., Boiler #1, Unit #1, etc): Delayed Coker Heater No. 1A
2. Manufacturer: to be determined | Manufacture date: n/a
3. Model number: to be determined
4. Type (i.e., steam boiler, simple cycle combustion turbine, generator, etc.)

process heater

5. Maximum designed operating rate (name plate):

	242.5	million Btus per hour heat input	
or		horsepower with boiler efficiency:	
or		kilowatts with boiler efficiency:	

6. Check the appropriate box(es) for primary and secondary fuels:

☐	Natural gas		☐	Propane	
☐	Distillate oil	Sulfur content		Weight percent	
☐	Residual oil	Sulfur content		Weight percent	
☐	Bituminous Coal	☐	Subbituminous Coal	☐	Lignite Coal
Coal sulfur content		Weight percent	Coal ash content		Weight percent
☑	Other (please specify)	refinery fuel gas			

7. Has a stack test been conducted (check appropriate box)? ☐ Yes ☑ No

If a stack test has been conducted, please attach a copy of the most recent stack test report to this application. If the Department already has a copy of the most recent stack test, please specify the date of most recent stack test.

Date of most recent stack test:

Control Equipment: If applicable, types of air pollution control equipment (Examples: baghouse, cyclone, wet scrubber, electrostatic precipitator, thermal oxidizer, miscellaneous control device, etc.).

SCR

Please complete the appropriate air quality permit application form for each type of control equipment that controls air emissions from this operation.

Stack Information: If this application is a renewal, contact the air program. We may have this information.

X- Coordinate or Easting:		feet		meters
Y- Coordinate or Northing:		feet		meters
Base Elevation of Stack:		feet		meters
Stack Height:		feet		meters
Exit Stack Diameter		feet		meters
Exit Stack Temperature		degrees Fahrenheit		

Exit Stack Velocity and/or Flow Rate:

Velocity:		feet per second		meters per second
		and/or		
Flow Rate:		actual cubic feet per minute		actual cubic meters per second

Delayed Coker Heater No. 1A exhausts to atmosphere through SCR system. See attached E1639V1 form for stack parameters.

SD EForm - 1639 V1

Air Quality Permit Application Form

Miscellaneous Control Device

This form is to be submitted, if necessary, along with the Title V (Part 70) Operating Permit, Minor Operating Permit, or the General Permits.

(please complete shaded areas)

Describe the miscellaneous control device and how it works:

Ammonia is injected into the flue gas upstream of a catalytic reactor, where the catalyst promotes a reduction reaction that converts NOx to molecular nitrogen.

Equipment and processes served by this baghouse (please list all equipment and processes):

	Equipment and Processes
1.	Delayed Coker Heater No. 1A
2.	
3.	
4.	
5.	

Manufacturer Information:

Manufacturer?	to be determined (tbd)		
Manufacturer date?	tbd	Installation date?	tbd
Manufacturer's designed control efficiency?	tbd	%	

Miscellaneous Control Device Operation and Maintenance:

Pressure drop across control unit?	n/a	Inches water (minimum)	n/a	inches water (maximum)
Inlet Temperature?	tbd	Fahrenheit (minimum)	tbd	Fahrenheit (maximum)
Outlet Temperature?	n/a	Fahrenheit (minimum)	n/a	Fahrenheit (maximum)

Describe maintenance of control unit (use of visual inspections, maintenance schedule, etc.):

to be determined

Stack Information: If this application is a renewal, contact the air program. We may have this information.

X- Coordinate or Easting: [1]		feet	or	686,428.13	meters
Y- Coordinate or Northing: [1]		feet	or	4,741,873.00	meters
Base Elevation of Stack: [1]	1,220.00	feet	or		meters
Stack Height:	220.00	feet	or		meters
Exit Stack Diameter	9.00	feet	or		meters
Exit Stack Temperature	426.00	degrees Fahrenheit			

Exit Stack Velocity and/or Flow Rate:

Velocity:	20.30	feet per second		meters per second

and/or

Flow Rate:		actual cubic feet per minute		actual cubic meters per second

[1] - Portable asphalt plants, rock crushers, or concrete plants do not have to provide the requested information in these categories.

South Dakota Department of Environment & Natural Resources
Protecting SD's Tomorrow...Today

Air Quality Permit Application Form

Boiler Turbine or Furnace

This form is to be submitted, if necessary, along with the Title V (Part 70) Operating Permit or Minor Operating Permit.
(please complete shaded areas)

1. Facility identification (i.e., Boiler #1, Unit #1, etc): Delayed Coker Heater No. 1B
2. Manufacturer: to be determined | Manufacture date: n/a
3. Model number: to be determined
4. Type (i.e., steam boiler, simple cycle combustion turbine, generator, etc.)

process heater

5. Maximum designed operating rate (name plate):

	242.5	million Btus per hour heat input	
or		horsepower with boiler efficiency:	
or		kilowatts with boiler efficiency:	

6. Check the appropriate box(es) for primary and secondary fuels:

☐	Natural gas		☐	Propane	
☐	Distillate oil	Sulfur content		Weight percent	
☐	Residual oil	Sulfur content		Weight percent	
☐	Bituminous Coal	☐	Subbituminous Coal	☐	Lignite Coal
Coal sulfur content		Weight percent	Coal ash content		Weight percent
☑	Other (please specify)	refinery fuel gas			

7. Has a stack test been conducted (check appropriate box)? ☐ Yes ☑ No

If a stack test has been conducted, please attach a copy of the most recent stack test report to this application. If the Department already has a copy of the most recent stack test, please specify the date of most recent stack test.

Date of most recent stack test:

Control Equipment: If applicable, types of air pollution control equipment (Examples: baghouse, cyclone, wet scrubber, electrostatic precipitator, thermal oxidizer, miscellaneous control device, etc.).

SCR

Please complete the appropriate air quality permit application form for each type of control equipment that controls air emissions from this operation.

Stack Information: If this application is a renewal, contact the air program. We may have this information.

X- Coordinate or Easting:		feet		meters
Y- Coordinate or Northing:		feet		meters
Base Elevation of Stack:		feet		meters
Stack Height:		feet		meters
Exit Stack Diameter		feet		meters
Exit Stack Temperature		degrees Fahrenheit		

Exit Stack Velocity and/or Flow Rate:

Velocity:		feet per second		meters per second

and/or

Flow Rate:		actual cubic feet per minute		actual cubic meters per second

Delayed Coker Heater No. 1B exhausts to atmosphere through SCR system. See attached E1639V1 form for stack parameters.

South Dakota Department of Environment & Natural Resources
Protecting SD's Tomorrow...Today

Air Quality Permit Application Form

Miscellaneous Control Device

This form is to be submitted, if necessary, along with the Title V (Part 70) Operating Permit, Minor Operating Permit, or the General Permits.

(please complete shaded areas)

Describe the miscellaneous control device and how it works:

Ammonia is injected into the flue gas upstream of a catalytic reactor, where the catalyst promotes a reduction reaction that converts NOx to molecular nitrogen.

Equipment and processes served by this baghouse (please list all equipment and processes):

	Equipment and Processes
1.	Delayed Coker Heater No. 1B
2.	
3.	
4.	
5.	

Manufacturer Information:

Manufacturer?	to be determined (tbd)		
Manufacturer date?	tbd	Installation date?	tbd
Manufacturer's designed control efficiency?	tbd	%	

Miscellaneous Control Device Operation and Maintenance:

Pressure drop across control unit?	n/a	Inches water (minimum)	n/a	inches water (maximum)
Inlet Temperature?	tbd	Fahrenheit (minimum)	tbd	Fahrenheit (maximum)
Outlet Temperature?	n/a	Fahrenheit (minimum)	n/a	Fahrenheit (maximum)

Describe maintenance of control unit (use of visual inspections, maintenance schedule, etc.):

to be determined

Stack Information: If this application is a renewal, contact the air program. We may have this information.

X- Coordinate or Easting: [1]		feet	or	686,428.69	meters
Y- Coordinate or Northing: [1]		feet	or	4,741,896.00	meters
Base Elevation of Stack: [1]	1,220.00	feet	or		meters
Stack Height:	220.00	feet	or		meters
Exit Stack Diameter	9.00	feet	or		meters
Exit Stack Temperature	426.00	degrees Fahrenheit			

Exit Stack Velocity and/or Flow Rate:

Velocity:	20.30	feet per second		meters per second

and/or

Flow Rate:		actual cubic feet per minute		actual cubic meters per second

[1] - Portable asphalt plants, rock crushers, or concrete plants do not have to provide the requested information in these categories.

South Dakota Department of Environment & Natural Resources
Protecting SD's Tomorrow...Today

Air Quality Permit Application Form

Boiler Turbine or Furnace

This form is to be submitted, if necessary, along with the Title V (Part 70) Operating Permit or Minor Operating Permit.
(please complete shaded areas)

1. Facility identification (i.e., Boiler #1, Unit #1, etc): Delayed Coker Heater No. 2A
2. Manufacturer: to be determined | Manufacture date: n/a
3. Model number: to be determined
4. Type (i.e., steam boiler, simple cycle combustion turbine, generator, etc.)

process heater

5. Maximum designed operating rate (name plate):

	242.5	million Btus per hour heat input	
or		horsepower with boiler efficiency:	
or		kilowatts with boiler efficiency:	

6. Check the appropriate box(es) for primary and secondary fuels:

☐	Natural gas		☐	Propane	
☐	Distillate oil	Sulfur content		Weight percent	
☐	Residual oil	Sulfur content		Weight percent	
☐	Bituminous Coal	☐	Subbituminous Coal	☐	Lignite Coal
Coal sulfur content		Weight percent	Coal ash content		Weight percent
☑	Other (please specify)	refinery fuel gas			

7. Has a stack test been conducted (check appropriate box)? ☐ Yes ☑ No

If a stack test has been conducted, please attach a copy of the most recent stack test report to this application. If the Department already has a copy of the most recent stack test, please specify the date of most recent stack test.

Date of most recent stack test:

Control Equipment: If applicable, types of air pollution control equipment (Examples: baghouse, cyclone, wet scrubber, electrostatic precipitator, thermal oxidizer, miscellaneous control device, etc.).

SCR

Please complete the appropriate air quality permit application form for each type of control equipment that controls air emissions from this operation.

Stack Information: If this application is a renewal, contact the air program. We may have this information.

X- Coordinate or Easting:		feet		meters
Y- Coordinate or Northing:		feet		meters
Base Elevation of Stack:		feet		meters
Stack Height:		feet		meters
Exit Stack Diameter		feet		meters
Exit Stack Temperature		degrees Fahrenheit		

Exit Stack Velocity and/or Flow Rate:

Velocity:		feet per second		meters per second

and/or

Flow Rate:		actual cubic feet per minute		actual cubic meters per second

Delayed Coker Heater No. 2A exhausts to atmosphere through SCR system. See attached E1639V1 form for stack parameters.

SD EForm - 1639 V1

Air Quality Permit Application Form

Miscellaneous Control Device

This form is to be submitted, if necessary, along with the Title V (Part 70) Operating Permit, Minor Operating Permit, or the General Permits.

(please complete shaded areas)

Describe the miscellaneous control device and how it works:

Ammonia is injected into the flue gas upstream of a catalytic reactor, where the catalyst promotes a reduction reaction that converts NOx to molecular nitrogen.

Equipment and processes served by this baghouse (please list all equipment and processes):

	Equipment and Processes
1.	Delayed Coker Heater No. 2A
2.	
3.	
4.	
5.	

Manufacturer Information:

Manufacturer?	to be determined (tbd)		
Manufacturer date?	tbd	Installation date?	tbd
Manufacturer's designed control efficiency?	tbd	%	

Miscellaneous Control Device Operation and Maintenance:

Pressure drop across control unit?	n/a	Inches water (minimum)	n/a	inches water (maximum)
Inlet Temperature?	tbd	Fahrenheit (minimum)	tbd	Fahrenheit (maximum)
Outlet Temperature?	n/a	Fahrenheit (minimum)	n/a	Fahrenheit (maximum)

Describe maintenance of control unit (use of visual inspections, maintenance schedule, etc.):

to be determined

Stack Information: If this application is a renewal, contact the air program. We may have this information.

X- Coordinate or Easting: [1]		feet	or	686,429.88	meters
Y- Coordinate or Northing: [1]		feet	or	4,741,675.00	meters
Base Elevation of Stack: [1]	1,220.00	feet	or		meters
Stack Height:	220.00	feet	or		meters
Exit Stack Diameter	9.00	feet	or		meters
Exit Stack Temperature	426.00	degrees Fahrenheit			

Exit Stack Velocity and/or Flow Rate:

Velocity:	20.30	feet per second		meters per second

and/or

Flow Rate:		actual cubic feet per minute		actual cubic meters per second

[1] - Portable asphalt plants, rock crushers, or concrete plants do not have to provide the requested information in these categories.

South Dakota Department of Environment & Natural Resources
Protecting SD's Tomorrow...Today

Air Quality Permit Application Form

Boiler Turbine or Furnace

This form is to be submitted, if necessary, along with the Title V (Part 70) Operating Permit or Minor Operating Permit.
(please complete shaded areas)

1. Facility identification (i.e., Boiler #1, Unit #1, etc): Delayed Coker Heater No. 2B
2. Manufacturer: to be determined | Manufacture date: n/a
3. Model number: to be determined
4. Type (i.e., steam boiler, simple cycle combustion turbine, generator, etc.)

process heater

5. Maximum designed operating rate (name plate):

	242.5	million Btus per hour heat input	
or		horsepower with boiler efficiency:	
or		kilowatts with boiler efficiency:	

6. Check the appropriate box(es) for primary and secondary fuels:

☐	Natural gas		☐	Propane	
☐	Distillate oil	Sulfur content		Weight percent	
☐	Residual oil	Sulfur content		Weight percent	
☐	Bituminous Coal	☐	Subbituminous Coal	☐	Lignite Coal
Coal sulfur content		Weight percent	Coal ash content		Weight percent
☑	Other (please specify)	refinery fuel gas			

7. Has a stack test been conducted (check appropriate box)? ☐ Yes ☑ No

If a stack test has been conducted, please attach a copy of the most recent stack test report to this application. If the Department already has a copy of the most recent stack test, please specify the date of most recent stack test.

Date of most recent stack test:

Control Equipment: If applicable, types of air pollution control equipment (Examples: baghouse, cyclone, wet scrubber, electrostatic precipitator, thermal oxidizer, miscellaneous control device, etc.).

SCR

Please complete the appropriate air quality permit application form for each type of control equipment that controls air emissions from this operation.

Stack Information: If this application is a renewal, contact the air program. We may have this information.

X- Coordinate or Easting:		feet		meters
Y- Coordinate or Northing:		feet		meters
Base Elevation of Stack:		feet		meters
Stack Height:		feet		meters
Exit Stack Diameter		feet		meters
Exit Stack Temperature		degrees Fahrenheit		

Exit Stack Velocity and/or Flow Rate:

Velocity:		feet per second		meters per second

and/or

Flow Rate:		actual cubic feet per minute		actual cubic meters per second

Delayed Coker Heater No. 2B exhausts to atmosphere through SCR system. See attached E1639V1 form for stack parameters.

SD EForm - 1639 V1

Air Quality Permit Application Form

Miscellaneous Control Device

This form is to be submitted, if necessary, along with the Title V (Part 70) Operating Permit, Minor Operating Permit, or the General Permits.

(please complete shaded areas)

Describe the miscellaneous control device and how it works:

Ammonia is injected into the flue gas upstream of a catalytic reactor, where the catalyst promotes a reduction reaction that converts NOx to molecular nitrogen.

Equipment and processes served by this baghouse (please list all equipment and processes):

	Equipment and Processes
1.	Delayed Coker Heater No. 2B
2.	
3.	
4.	
5.	

Manufacturer Information:

Manufacturer?	to be determined (tbd)		
Manufacturer date?	tbd	Installation date?	tbd
Manufacturer's designed control efficiency?	tbd	%	

Miscellaneous Control Device Operation and Maintenance:

Pressure drop across control unit?	n/a	Inches water (minimum)	n/a	inches water (maximum)
Inlet Temperature?	tbd	Fahrenheit (minimum)	tbd	Fahrenheit (maximum)
Outlet Temperature?	n/a	Fahrenheit (minimum)	n/a	Fahrenheit (maximum)

Describe maintenance of control unit (use of visual inspections, maintenance schedule, etc.):

to be determined

Stack Information: If this application is a renewal, contact the air program. We may have this information.

X- Coordinate or Easting: [1]		feet	or	686,429.31	meters
Y- Coordinate or Northing: [1]		feet	or	4,741,698.50	meters
Base Elevation of Stack: [1]	1,220.00	feet	or		meters
Stack Height:	220.00	feet	or		meters
Exit Stack Diameter	9.00	feet	or		meters
Exit Stack Temperature	426.00	degrees Fahrenheit			

Exit Stack Velocity and/or Flow Rate:

Velocity:	20.30	feet per second		meters per second

and/or

Flow Rate:		actual cubic feet per minute		actual cubic meters per second

[1] - Portable asphalt plants, rock crushers, or concrete plants do not have to provide the requested information in these categories.

SD EForm - 1630 V1

South Dakota Department of Environment & Natural Resources
Protecting SD's Tomorrow...Today

Air Quality Permit Application Form

Boiler Turbine or Furnace

This form is to be submitted, if necessary, along with the Title V (Part 70) Operating Permit or Minor Operating Permit.

(please complete shaded areas)

1. Facility identification (i.e., Boiler #1, Unit #1, etc): No. 1 Platformer Charge & 1st Interheater

2. Manufacturer: to be determined | Manufacture date: n/a

3. Model number: to be determined

4. Type (i.e., steam boiler, simple cycle combustion turbine, generator, etc.)

process heater

5. Maximum designed operating rate (name plate):

	824.5	million Btus per hour heat input	
or		horsepower with boiler efficiency:	
or		kilowatts with boiler efficiency:	

6. Check the appropriate box(es) for primary and secondary fuels:

☐	Natural gas		☐	Propane	
☐	Distillate oil	Sulfur content		Weight percent	
☐	Residual oil	Sulfur content		Weight percent	
☐	Bituminous Coal	☐	Subbituminous Coal	☐	Lignite Coal
Coal sulfur content		Weight percent	Coal ash content		Weight percent
☑	Other (please specify)	refinery fuel gas			

7. Has a stack test been conducted (check appropriate box)? ☐ Yes ☑ No

If a stack test has been conducted, please attach a copy of the most recent stack test report to this application. If the Department already has a copy of the most recent stack test, please specify the date of most recent stack test.

Date of most recent stack test:

Control Equipment: If applicable, types of air pollution control equipment (Examples: baghouse, cyclone, wet scrubber, electrostatic precipitator, thermal oxidizer, miscellaneous control device, etc.).

SCR

Please complete the appropriate air quality permit application form for each type of control equipment that controls air emissions from this operation.

Stack Information: If this application is a renewal, contact the air program. We may have this information.

X- Coordinate or Easting:		feet		meters
Y- Coordinate or Northing:		feet		meters
Base Elevation of Stack:		feet		meters
Stack Height:		feet		meters
Exit Stack Diameter		feet		meters
Exit Stack Temperature		degrees Fahrenheit		

Exit Stack Velocity and/or Flow Rate:

Velocity:		feet per second		meters per second

and/or

Flow Rate:		actual cubic feet per minute		actual cubic meters per second

No. 1 Platformer Charge & 1st Interheater exhausts to atmosphere through SCR system. See attached E1639V1 form for stack parameters.

SD EForm - 1639 V1

Air Quality Permit Application Form

Miscellaneous Control Device

This form is to be submitted, if necessary, along with the Title V (Part 70) Operating Permit, Minor Operating Permit, or the General Permits.

(please complete shaded areas)

Describe the miscellaneous control device and how it works:

Ammonia is injected into the flue gas upstream of a catalytic reactor, where the catalyst promotes a reduction reaction that converts NOx to molecular nitrogen.

Equipment and processes served by this baghouse (please list all equipment and processes):

	Equipment and Processes
1.	No. 1 Platformer Charge & 1st Interheater
2.	
3.	
4.	
5.	

Manufacturer Information:

Manufacturer?	to be determined (tbd)		
Manufacturer date?	tbd	Installation date?	tbd
Manufacturer's designed control efficiency?	tbd	%	

Miscellaneous Control Device Operation and Maintenance:

Pressure drop across control unit?	n/a	Inches water (minimum)	n/a	inches water (maximum)
Inlet Temperature?	tbd	Fahrenheit (minimum)	tbd	Fahrenheit (maximum)
Outlet Temperature?	n/a	Fahrenheit (minimum)	n/a	Fahrenheit (maximum)

Describe maintenance of control unit (use of visual inspections, maintenance schedule, etc.):

to be determined

Stack Information: If this application is a renewal, contact the air program. We may have this information.

X- Coordinate or Easting: [1]		feet	or	686,336.81	meters
Y- Coordinate or Northing: [1]		feet	or	4,742,516.50	meters
Base Elevation of Stack: [1]	1,220.00	feet	or		meters
Stack Height:	150.00	feet	or		meters
Exit Stack Diameter	15.00	feet	or		meters
Exit Stack Temperature	426.00	degrees Fahrenheit			

Exit Stack Velocity and/or Flow Rate:

Velocity:	24.70	feet per second		meters per second

and/or

Flow Rate:		actual cubic feet per minute		actual cubic meters per second

[1] - Portable asphalt plants, rock crushers, or concrete plants do not have to provide the requested information in these categories.

SD EForm - 1630 V1

South Dakota Department of Environment & Natural Resources
Protecting SD's Tomorrow...Today

Air Quality Permit Application Form

Boiler Turbine or Furnace

This form is to be submitted, if necessary, along with the Title V (Part 70) Operating Permit or Minor Operating Permit.
(please complete shaded areas)

1. Facility identification (i.e., Boiler #1, Unit #1, etc): No. 1 Platformer 2nd & 3rd Interheaters
2. Manufacturer: to be determined | Manufacture date: n/a
3. Model number: to be determined
4. Type (i.e., steam boiler, simple cycle combustion turbine, generator, etc.)

process heater

5. Maximum designed operating rate (name plate):

	492.9	million Btus per hour heat input	
or		horsepower with boiler efficiency:	
or		kilowatts with boiler efficiency:	

6. Check the appropriate box(es) for primary and secondary fuels:

☐	Natural gas		☐	Propane	
☐	Distillate oil	Sulfur content		Weight percent	
☐	Residual oil	Sulfur content		Weight percent	
☐	Bituminous Coal	☐	Subbituminous Coal	☐	Lignite Coal
Coal sulfur content		Weight percent	Coal ash content		Weight percent
☑	Other (please specify)	refinery fuel gas			

7. Has a stack test been conducted (check appropriate box)? ☐ Yes ☑ No

If a stack test has been conducted, please attach a copy of the most recent stack test report to this application. If the Department already has a copy of the most recent stack test, please specify the date of most recent stack test.

Date of most recent stack test:

Control Equipment: If applicable, types of air pollution control equipment (Examples: baghouse, cyclone, wet scrubber, electrostatic precipitator, thermal oxidizer, miscellaneous control device, etc.).

SCR

Please complete the appropriate air quality permit application form for each type of control equipment that controls air emissions from this operation.

Stack Information: If this application is a renewal, contact the air program. We may have this information.

X- Coordinate or Easting:		feet		meters
Y- Coordinate or Northing:		feet		meters
Base Elevation of Stack:		feet		meters
Stack Height:		feet		meters
Exit Stack Diameter		feet		meters
Exit Stack Temperature		degrees Fahrenheit		

Exit Stack Velocity and/or Flow Rate:

Velocity:		feet per second		meters per second

and/or

Flow Rate:		actual cubic feet per minute		actual cubic meters per second

No. 1 Platformer 2nd & 3rd Interheaters exhausts to atmosphere through SCR system. See attached E1639V1 form for stack parameters.

Air Quality Permit Application Form

Miscellaneous Control Device

This form is to be submitted, if necessary, along with the Title V (Part 70) Operating Permit, Minor Operating Permit, or the General Permits.

(please complete shaded areas)

Describe the miscellaneous control device and how it works:

Ammonia is injected into the flue gas upstream of a catalytic reactor, where the catalyst promotes a reduction reaction that converts NOx to molecular nitrogen.

Equipment and processes served by this baghouse (please list all equipment and processes):

	Equipment and Processes
1.	No. 1 Platformer 2nd & 3rd Interheaters
2.	
3.	
4.	
5.	

Manufacturer Information:

Manufacturer?	to be determined (tbd)		
Manufacturer date?	tbd	Installation date?	tbd
Manufacturer's designed control efficiency?	tbd	%	

Miscellaneous Control Device Operation and Maintenance:

Pressure drop across control unit?	n/a	Inches water (minimum)	n/a	inches water (maximum)
Inlet Temperature?	tbd	Fahrenheit (minimum)	tbd	Fahrenheit (maximum)
Outlet Temperature?	n/a	Fahrenheit (minimum)	n/a	Fahrenheit (maximum)

Describe maintenance of control unit (use of visual inspections, maintenance schedule, etc.):

to be determined

Stack Information: If this application is a renewal, contact the air program. We may have this information.

X- Coordinate or Easting: [1]		feet	or	686,513.63	meters
Y- Coordinate or Northing: [1]		feet	or	4,742,521.50	meters
Base Elevation of Stack: [1]	1,220.00	feet	or		meters
Stack Height:	150.00	feet	or		meters
Exit Stack Diameter	12.00	feet	or		meters
Exit Stack Temperature	426.00	degrees Fahrenheit			

Exit Stack Velocity and/or Flow Rate:

Velocity:	23.10	feet per second		meters per second

and/or

Flow Rate:		actual cubic feet per minute		actual cubic meters per second

[1] - Portable asphalt plants, rock crushers, or concrete plants do not have to provide the requested information in these categories.

South Dakota Department of Environment & Natural Resources
Protecting SD's Tomorrow...Today

Air Quality Permit Application Form

Boiler Turbine or Furnace

This form is to be submitted, if necessary, along with the Title V (Part 70) Operating Permit or Minor Operating Permit.
(please complete shaded areas)

1. Facility identification (i.e., Boiler #1, Unit #1, etc): No. 2 Platformer Charge & 1st Interheater
2. Manufacturer: to be determined | Manufacture date: n/a
3. Model number: to be determined
4. Type (i.e., steam boiler, simple cycle combustion turbine, generator, etc.)

process heater

5. Maximum designed operating rate (name plate):

	824.5	million Btus per hour heat input	
or		horsepower with boiler efficiency:	
or		kilowatts with boiler efficiency:	

6. Check the appropriate box(es) for primary and secondary fuels:

☐	Natural gas		☐	Propane	
☐	Distillate oil	Sulfur content		Weight percent	
☐	Residual oil	Sulfur content		Weight percent	
☐	Bituminous Coal	☐	Subbituminous Coal	☐	Lignite Coal
Coal sulfur content		Weight percent	Coal ash content		Weight percent
☑	Other (please specify)	refinery fuel gas			

7. Has a stack test been conducted (check appropriate box)? ☐ Yes ☑ No

If a stack test has been conducted, please attach a copy of the most recent stack test report to this application. If the Department already has a copy of the most recent stack test, please specify the date of most recent stack test.

Date of most recent stack test:

Control Equipment: If applicable, types of air pollution control equipment (Examples: baghouse, cyclone, wet scrubber, electrostatic precipitator, thermal oxidizer, miscellaneous control device, etc.).

SCR

Please complete the appropriate air quality permit application form for each type of control equipment that controls air emissions from this operation.

Stack Information: If this application is a renewal, contact the air program. We may have this information.

X- Coordinate or Easting:		feet		meters
Y- Coordinate or Northing:		feet		meters
Base Elevation of Stack:		feet		meters
Stack Height:		feet		meters
Exit Stack Diameter		feet		meters
Exit Stack Temperature		degrees Fahrenheit		

Exit Stack Velocity and/or Flow Rate:

Velocity:		feet per second		meters per second

and/or

Flow Rate:		actual cubic feet per minute		actual cubic meters per second

No. 2 Platformer Charge & 1st Interheater exhausts to atmosphere through SCR system. See attached E1639V1 form for stack parameters.

SD EForm - 1639 V1

Air Quality Permit Application Form

Miscellaneous Control Device

This form is to be submitted, if necessary, along with the Title V (Part 70) Operating Permit, Minor Operating Permit, or the General Permits.

(please complete shaded areas)

Describe the miscellaneous control device and how it works:

Ammonia is injected into the flue gas upstream of a catalytic reactor, where the catalyst promotes a reduction reaction that converts NOx to molecular nitrogen.

Equipment and processes served by this baghouse (please list all equipment and processes):

	Equipment and Processes
1.	No. 2 Platformer Charge & 1st Interheater
2.	
3.	
4.	
5.	

Manufacturer Information:

Manufacturer?	to be determined (tbd)		
Manufacturer date?	tbd	Installation date?	tbd
Manufacturer's designed control efficiency?	tbd	%	

Miscellaneous Control Device Operation and Maintenance:

Pressure drop across control unit?	n/a	Inches water (minimum)	n/a	inches water (maximum)
Inlet Temperature?	tbd	Fahrenheit (minimum)	tbd	Fahrenheit (maximum)
Outlet Temperature?	n/a	Fahrenheit (minimum)	n/a	Fahrenheit (maximum)

Describe maintenance of control unit (use of visual inspections, maintenance schedule, etc.):

to be determined

Stack Information: If this application is a renewal, contact the air program. We may have this information.

X- Coordinate or Easting: [1]		feet	or	686,357.00	meters
Y- Coordinate or Northing: [1]		feet	or	4,742,517.00	meters
Base Elevation of Stack: [1]	1,220.00	feet	or		meters
Stack Height:	150.00	feet	or		meters
Exit Stack Diameter	15.00	feet	or		meters
Exit Stack Temperature	426.00	degrees Fahrenheit			

Exit Stack Velocity and/or Flow Rate:

Velocity:	24.70	feet per second		meters per second

and/or

Flow Rate:		actual cubic feet per minute		actual cubic meters per second

[1] - Portable asphalt plants, rock crushers, or concrete plants do not have to provide the requested information in these categories.

SD EForm - 1630 V1

South Dakota Department of Environment & Natural Resources
Protecting SD's Tomorrow...Today

Air Quality Permit Application Form

Boiler Turbine or Furnace

This form is to be submitted, if necessary, along with the Title V (Part 70) Operating Permit or Minor Operating Permit.

(please complete shaded areas)

1. Facility identification (i.e., Boiler #1, Unit #1, etc): No. 2 Platformer 2nd & 3rd Interheaters

2. Manufacturer: to be determined | Manufacture date: n/a

3. Model number: to be determined

4. Type (i.e., steam boiler, simple cycle combustion turbine, generator, etc.)

process heater

5. Maximum designed operating rate (name plate):

	492.9	million Btus per hour heat input	
or		horsepower with boiler efficiency:	
or		kilowatts with boiler efficiency:	

6. Check the appropriate box(es) for primary and secondary fuels:

☐	Natural gas		☐	Propane	
☐	Distillate oil	Sulfur content		Weight percent	
☐	Residual oil	Sulfur content		Weight percent	
☐	Bituminous Coal	☐	Subbituminous Coal	☐	Lignite Coal
Coal sulfur content		Weight percent	Coal ash content		Weight percent
☑	Other (please specify)	refinery fuel gas			

7. Has a stack test been conducted (check appropriate box)? ☐ Yes ☑ No

If a stack test has been conducted, please attach a copy of the most recent stack test report to this application. If the Department already has a copy of the most recent stack test, please specify the date of most recent stack test.

Date of most recent stack test:

Control Equipment: If applicable, types of air pollution control equipment (Examples: baghouse, cyclone, wet scrubber, electrostatic precipitator, thermal oxidizer, miscellaneous control device, etc.).

SCR

Please complete the appropriate air quality permit application form for each type of control equipment that controls air emissions from this operation.

Stack Information: If this application is a renewal, contact the air program. We may have this information.

X- Coordinate or Easting:		feet		meters
Y- Coordinate or Northing:		feet		meters
Base Elevation of Stack:		feet		meters
Stack Height:		feet		meters
Exit Stack Diameter		feet		meters
Exit Stack Temperature		degrees Fahrenheit		

Exit Stack Velocity and/or Flow Rate:

Velocity:		feet per second		meters per second

and/or

Flow Rate:		actual cubic feet per minute		actual cubic meters per second

No. 2 Platformer 2nd & 3rd Interheaters exhausts to atmosphere through SCR system. See attached E1639V1 form for stack parameters.

South Dakota Department of Environment & Natural Resources
Protecting SD's Tomorrow...Today

Air Quality Permit Application Form

Miscellaneous Control Device

This form is to be submitted, if necessary, along with the Title V (Part 70) Operating Permit, Minor Operating Permit, or the General Permits.

(please complete shaded areas)

Describe the miscellaneous control device and how it works:

Ammonia is injected into the flue gas upstream of a catalytic reactor, where the catalyst promotes a reduction reaction that converts NOx to molecular nitrogen.

Equipment and processes served by this baghouse (please list all equipment and processes):

	Equipment and Processes
1.	No. 2 Platformer 2nd & 3rd Interheaters
2.	
3.	
4.	
5.	

Manufacturer Information:

Manufacturer?	to be determined (tbd)		
Manufacturer date?	tbd	Installation date?	tbd
Manufacturer's designed control efficiency?	tbd	%	

Miscellaneous Control Device Operation and Maintenance:

Pressure drop across control unit?	n/a	Inches water (minimum)	n/a	inches water (maximum)
Inlet Temperature?	tbd	Fahrenheit (minimum)	tbd	Fahrenheit (maximum)
Outlet Temperature?	n/a	Fahrenheit (minimum)	n/a	Fahrenheit (maximum)

Describe maintenance of control unit (use of visual inspections, maintenance schedule, etc.):

to be determined

Stack Information: If this application is a renewal, contact the air program. We may have this information.

X- Coordinate or Easting: [1]		feet	or	686,536.88	meters
Y- Coordinate or Northing: [1]		feet	or	4,742,521.50	meters
Base Elevation of Stack: [1]	1,220.00	feet	or		meters
Stack Height:	150.00	feet	or		meters
Exit Stack Diameter	12.00	feet	or		meters
Exit Stack Temperature	426.00	degrees Fahrenheit			

Exit Stack Velocity and/or Flow Rate:

Velocity:	23.10	feet per second		meters per second

and/or

Flow Rate:		actual cubic feet per minute		actual cubic meters per second

[1] - Portable asphalt plants, rock crushers, or concrete plants do not have to provide the requested information in these categories.

SD EForm - 1630 V1

South Dakota Department of Environment & Natural Resources
Protecting SD's Tomorrow...Today

Air Quality Permit Application Form

Boiler Turbine or Furnace

This form is to be submitted, if necessary, along with the Title V (Part 70) Operating Permit or Minor Operating Permit.
(please complete shaded areas)

1. Facility identification (i.e., Boiler #1, Unit #1, etc): Oleflex Heater
2. Manufacturer: to be determined | Manufacture date: n/a
3. Model number: to be determined
4. Type (i.e., steam boiler, simple cycle combustion turbine, generator, etc.)

process heater

5. Maximum designed operating rate (name plate):

	604.4	million Btus per hour heat input	
or		horsepower with boiler efficiency:	
or		kilowatts with boiler efficiency:	

6. Check the appropriate box(es) for primary and secondary fuels:

☐	Natural gas		☐	Propane	
☐	Distillate oil	Sulfur content		Weight percent	
☐	Residual oil	Sulfur content		Weight percent	
☐	Bituminous Coal	☐	Subbituminous Coal	☐	Lignite Coal
Coal sulfur content		Weight percent	Coal ash content		Weight percent
☑	Other (please specify)	refinery fuel gas			

7. Has a stack test been conducted (check appropriate box)? ☐ Yes ☑ No

If a stack test has been conducted, please attach a copy of the most recent stack test report to this application. If the Department already has a copy of the most recent stack test, please specify the date of most recent stack test.

Date of most recent stack test:

Control Equipment: If applicable, types of air pollution control equipment (Examples: baghouse, cyclone, wet scrubber, electrostatic precipitator, thermal oxidizer, miscellaneous control device, etc.).

SCR

Please complete the appropriate air quality permit application form for each type of control equipment that controls air emissions from this operation.

Stack Information: If this application is a renewal, contact the air program. We may have this information.

X- Coordinate or Easting:		feet		meters
Y- Coordinate or Northing:		feet		meters
Base Elevation of Stack:		feet		meters
Stack Height:		feet		meters
Exit Stack Diameter		feet		meters
Exit Stack Temperature		degrees Fahrenheit		

Exit Stack Velocity and/or Flow Rate:

Velocity:		feet per second		meters per second

and/or

Flow Rate:		actual cubic feet per minute		actual cubic meters per second

Oleflex Heater exhausts to atmosphere through SCR system.
See attached E1639V1 form for stack parameters.

Air Quality Permit Application Form

Miscellaneous Control Device

This form is to be submitted, if necessary, along with the Title V (Part 70) Operating Permit, Minor Operating Permit, or the General Permits.

(please complete shaded areas)

Describe the miscellaneous control device and how it works:

Ammonia is injected into the flue gas upstream of a catalytic reactor, where the catalyst promotes a reduction reaction that converts NOx to molecular nitrogen.

Equipment and processes served by this baghouse (please list all equipment and processes):

	Equipment and Processes
1.	Oleflex Heater
2.	
3.	
4.	
5.	

Manufacturer Information:

Manufacturer?	to be determined (tbd)		
Manufacturer date?	tbd	Installation date?	tbd
Manufacturer's designed control efficiency?	tbd	%	

Miscellaneous Control Device Operation and Maintenance:

Pressure drop across control unit?	n/a	Inches water (minimum)	n/a	inches water (maximum)
Inlet Temperature?	tbd	Fahrenheit (minimum)	tbd	Fahrenheit (maximum)
Outlet Temperature?	n/a	Fahrenheit (minimum)	n/a	Fahrenheit (maximum)

Describe maintenance of control unit (use of visual inspections, maintenance schedule, etc.):

to be determined

Stack Information: If this application is a renewal, contact the air program. We may have this information.

X- Coordinate or Easting: [1]		feet	or	686,609.63	meters
Y- Coordinate or Northing: [1]		feet	or	4,742,305.50	meters
Base Elevation of Stack: [1]	1,220.00	feet	or		meters
Stack Height:	200.00	feet	or		meters
Exit Stack Diameter	15.00	feet	or		meters
Exit Stack Temperature	539.00	degrees Fahrenheit			

Exit Stack Velocity and/or Flow Rate:

Velocity:	20.50	feet per second		meters per second

and/or

Flow Rate:		actual cubic feet per minute		actual cubic meters per second

[1] - Portable asphalt plants, rock crushers, or concrete plants do not have to provide the requested information in these categories.

South Dakota Department of Environment & Natural Resources
Protecting SD's Tomorrow...Today

Air Quality Permit Application Form

Boiler Turbine or Furnace

This form is to be submitted, if necessary, along with the Title V (Part 70) Operating Permit or Minor Operating Permit.
(please complete shaded areas)

1. Facility identification (i.e., Boiler #1, Unit #1, etc): Reformate Splitter Reboiler
2. Manufacturer: to be determined | Manufacture date: n/a
3. Model number: to be determined
4. Type (i.e., steam boiler, simple cycle combustion turbine, generator, etc.)

process heater

5. Maximum designed operating rate (name plate):

	138.0	million Btus per hour heat input	
or		horsepower with boiler efficiency:	
or		kilowatts with boiler efficiency:	

6. Check the appropriate box(es) for primary and secondary fuels:

☐	Natural gas		☐	Propane	
☐	Distillate oil	Sulfur content		Weight percent	
☐	Residual oil	Sulfur content		Weight percent	
☐	Bituminous Coal	☐	Subbituminous Coal	☐	Lignite Coal
Coal sulfur content		Weight percent	Coal ash content		Weight percent
☑	Other (please specify)	refinery fuel gas			

7. Has a stack test been conducted (check appropriate box)? ☐ Yes ☑ No

If a stack test has been conducted, please attach a copy of the most recent stack test report to this application. If the Department already has a copy of the most recent stack test, please specify the date of most recent stack test.

Date of most recent stack test:

Control Equipment: If applicable, types of air pollution control equipment (Examples: baghouse, cyclone, wet scrubber, electrostatic precipitator, thermal oxidizer, miscellaneous control device, etc.).

SCR

Please complete the appropriate air quality permit application form for each type of control equipment that controls air emissions from this operation.

Stack Information: If this application is a renewal, contact the air program. We may have this information.

X- Coordinate or Easting:		feet		meters
Y- Coordinate or Northing:		feet		meters
Base Elevation of Stack:		feet		meters
Stack Height:		feet		meters
Exit Stack Diameter		feet		meters
Exit Stack Temperature		degrees Fahrenheit		

Exit Stack Velocity and/or Flow Rate:

Velocity:		feet per second		meters per second
		and/or		
Flow Rate:		actual cubic feet per minute		actual cubic meters per second

Reformate Splitter Reboiler exhausts to atmosphere through SCR system. See attached E1639V1 form for stack parameters.

Air Quality Permit Application Form

Miscellaneous Control Device

This form is to be submitted, if necessary, along with the Title V (Part 70) Operating Permit, Minor Operating Permit, or the General Permits.

(please complete shaded areas)

Describe the miscellaneous control device and how it works:

Ammonia is injected into the flue gas upstream of a catalytic reactor, where the catalyst promotes a reduction reaction that converts NOx to molecular nitrogen.

Equipment and processes served by this baghouse (please list all equipment and processes):

	Equipment and Processes
1.	Reformate Splitter Reboiler
2.	
3.	
4.	
5.	

Manufacturer Information:

Manufacturer?	to be determined (tbd)		
Manufacturer date?	tbd	Installation date?	tbd
Manufacturer's designed control efficiency?	tbd	%	

Miscellaneous Control Device Operation and Maintenance:

Pressure drop across control unit?	n/a	Inches water (minimum)	n/a	inches water (maximum)
Inlet Temperature?	tbd	Fahrenheit (minimum)	tbd	Fahrenheit (maximum)
Outlet Temperature?	n/a	Fahrenheit (minimum)	n/a	Fahrenheit (maximum)

Describe maintenance of control unit (use of visual inspections, maintenance schedule, etc.):

to be determined

Stack Information: If this application is a renewal, contact the air program. We may have this information.

X- Coordinate or Easting: [1]		feet	or	686,293.69	meters
Y- Coordinate or Northing: [1]		feet	or	4,742,520.50	meters
Base Elevation of Stack: [1]	1,220.00	feet	or		meters
Stack Height:	150.00	feet	or		meters
Exit Stack Diameter	8.00	feet	or		meters
Exit Stack Temperature	802.00	degrees Fahrenheit			

Exit Stack Velocity and/or Flow Rate:

Velocity:	20.70	feet per second		meters per second

and/or

Flow Rate:		actual cubic feet per minute		actual cubic meters per second

[1] - Portable asphalt plants, rock crushers, or concrete plants do not have to provide the requested information in these categories.

South Dakota Department of Environment & Natural Resources
Protecting SD's Tomorrow...Today

Air Quality Permit Application Form

Boiler Turbine or Furnace

This form is to be submitted, if necessary, along with the Title V (Part 70) Operating Permit or Minor Operating Permit.
(please complete shaded areas)

1. Facility identification (i.e., Boiler #1, Unit #1, etc): No. 1 Hydrocracker Fractionator Feed Htr.
2. Manufacturer: to be determined | Manufacture date: n/a
3. Model number: to be determined
4. Type (i.e., steam boiler, simple cycle combustion turbine, generator, etc.)

process heater

5. Maximum designed operating rate (name plate):

	675.5	million Btus per hour heat input	
or		horsepower with boiler efficiency:	
or		kilowatts with boiler efficiency:	

6. Check the appropriate box(es) for primary and secondary fuels:

☐	Natural gas		☐	Propane	
☐	Distillate oil	Sulfur content		Weight percent	
☐	Residual oil	Sulfur content		Weight percent	
☐	Bituminous Coal	☐	Subbituminous Coal	☐	Lignite Coal
Coal sulfur content		Weight percent	Coal ash content		Weight percent
☑	Other (please specify)	refinery fuel gas			

7. Has a stack test been conducted (check appropriate box)? ☐ Yes ☑ No

If a stack test has been conducted, please attach a copy of the most recent stack test report to this application. If the Department already has a copy of the most recent stack test, please specify the date of most recent stack test.

Date of most recent stack test:

Control Equipment: If applicable, types of air pollution control equipment (Examples: baghouse, cyclone, wet scrubber, electrostatic precipitator, thermal oxidizer, miscellaneous control device, etc.).

SCR

Please complete the appropriate air quality permit application form for each type of control equipment that controls air emissions from this operation.

Stack Information: If this application is a renewal, contact the air program. We may have this information.

X- Coordinate or Easting:		feet		meters
Y- Coordinate or Northing:		feet		meters
Base Elevation of Stack:		feet		meters
Stack Height:		feet		meters
Exit Stack Diameter		feet		meters
Exit Stack Temperature		degrees Fahrenheit		

Exit Stack Velocity and/or Flow Rate:

Velocity:		feet per second		meters per second

and/or

Flow Rate:		actual cubic feet per minute		actual cubic meters per second

No. 1 Hydrocracker Fractionator Feed Heater exhausts to atmosphere through SCR system. See attached E1639V1 form for stack parameters.

Air Quality Permit Application Form

Miscellaneous Control Device

This form is to be submitted, if necessary, along with the Title V (Part 70) Operating Permit, Minor Operating Permit, or the General Permits.

(please complete shaded areas)

Describe the miscellaneous control device and how it works:

Ammonia is injected into the flue gas upstream of a catalytic reactor, where the catalyst promotes a reduction reaction that converts NOx to molecular nitrogen.

Equipment and processes served by this baghouse (please list all equipment and processes):

	Equipment and Processes
1.	No. 1 Hydrocracker Fractionator Feed Heater
2.	
3.	
4.	
5.	

Manufacturer Information:

Manufacturer?	to be determined (tbd)		
Manufacturer date?	tbd	Installation date?	tbd
Manufacturer's designed control efficiency?	tbd	%	

Miscellaneous Control Device Operation and Maintenance:

Pressure drop across control unit?	n/a	Inches water (minimum)	n/a	inches water (maximum)
Inlet Temperature?	tbd	Fahrenheit (minimum)	tbd	Fahrenheit (maximum)
Outlet Temperature?	n/a	Fahrenheit (minimum)	n/a	Fahrenheit (maximum)

Describe maintenance of control unit (use of visual inspections, maintenance schedule, etc.):

to be determined

Stack Information: If this application is a renewal, contact the air program. We may have this information.

X- Coordinate or Easting: [1]		feet	or	686,737.69	meters
Y- Coordinate or Northing: [1]		feet	or	4,742,694.50	meters
Base Elevation of Stack: [1]	1,220.00	feet	or		meters
Stack Height:	200.00	feet	or		meters
Exit Stack Diameter	16.00	feet	or		meters
Exit Stack Temperature	532.00	degrees Fahrenheit			

Exit Stack Velocity and/or Flow Rate:

Velocity:	21.60	feet per second		meters per second

and/or

Flow Rate:		actual cubic feet per minute		actual cubic meters per second

[1] - Portable asphalt plants, rock crushers, or concrete plants do not have to provide the requested information in these categories.

South Dakota Department of Environment & Natural Resources
Protecting SD's Tomorrow...Today

Air Quality Permit Application Form

Boiler Turbine or Furnace

This form is to be submitted, if necessary, along with the Title V (Part 70) Operating Permit or Minor Operating Permit.
(please complete shaded areas)

1. Facility identification (i.e., Boiler #1, Unit #1, etc): No. 2 Hydrocracker Fractionator Feed Htr.
2. Manufacturer: to be determined | Manufacture date: n/a
3. Model number: to be determined
4. Type (i.e., steam boiler, simple cycle combustion turbine, generator, etc.)

process heater

5. Maximum designed operating rate (name plate):

675.5 million Btus per hour heat input
or horsepower with boiler efficiency:
or kilowatts with boiler efficiency:

6. Check the appropriate box(es) for primary and secondary fuels:

☐ Natural gas ☐ Propane
☐ Distillate oil Sulfur content Weight percent
☐ Residual oil Sulfur content Weight percent
☐ Bituminous Coal ☐ Subbituminous Coal ☐ Lignite Coal
Coal sulfur content Weight percent Coal ash content Weight percent
☑ Other (please specify) refinery fuel gas

7. Has a stack test been conducted (check appropriate box)? ☐ Yes ☑ No

If a stack test has been conducted, please attach a copy of the most recent stack test report to this application. If the Department already has a copy of the most recent stack test, please specify the date of most recent stack test.

Date of most recent stack test:

Control Equipment: If applicable, types of air pollution control equipment (Examples: baghouse, cyclone, wet scrubber, electrostatic precipitator, thermal oxidizer, miscellaneous control device, etc.).

SCR

Please complete the appropriate air quality permit application form for each type of control equipment that controls air emissions from this operation.

Stack Information: If this application is a renewal, contact the air program. We may have this information.

X- Coordinate or Easting:		feet		meters
Y- Coordinate or Northing:		feet		meters
Base Elevation of Stack:		feet		meters
Stack Height:		feet		meters
Exit Stack Diameter		feet		meters
Exit Stack Temperature		degrees Fahrenheit		

Exit Stack Velocity and/or Flow Rate:

Velocity:		feet per second		meters per second

and/or

Flow Rate:		actual cubic feet per minute		actual cubic meters per second

No. 2 Hydrocracker Fractionator Feed Heater exhausts to atmosphere through SCR system. See attached E1639V1 form for stack parameters.

South Dakota Department of Environment & Natural Resources
Protecting SD's Tomorrow...Today

Air Quality Permit Application Form

Miscellaneous Control Device

This form is to be submitted, if necessary, along with the Title V (Part 70) Operating Permit, Minor Operating Permit, or the General Permits.

(please complete shaded areas)

Describe the miscellaneous control device and how it works:

Ammonia is injected into the flue gas upstream of a catalytic reactor, where the catalyst promotes a reduction reaction that converts NOx to molecular nitrogen.

Equipment and processes served by this baghouse (please list all equipment and processes):

	Equipment and Processes
1.	No. 2 Hydrocracker Fractionator Feed Heater
2.	
3.	
4.	
5.	

Manufacturer Information:

Manufacturer?	to be determined (tbd)		
Manufacturer date?	tbd	Installation date?	tbd
Manufacturer's designed control efficiency?	tbd	%	

Miscellaneous Control Device Operation and Maintenance:

Pressure drop across control unit?	n/a	Inches water (minimum)	n/a	inches water (maximum)
Inlet Temperature?	tbd	Fahrenheit (minimum)	tbd	Fahrenheit (maximum)
Outlet Temperature?	n/a	Fahrenheit (minimum)	n/a	Fahrenheit (maximum)

Describe maintenance of control unit (use of visual inspections, maintenance schedule, etc.):

to be determined

Stack Information: If this application is a renewal, contact the air program. We may have this information.

X- Coordinate or Easting: [1]		feet	or	686,909.94	meters
Y- Coordinate or Northing: [1]		feet	or	4,742,699.00	meters
Base Elevation of Stack: [1]	1,220.00	feet	or		meters
Stack Height:	200.00	feet	or		meters
Exit Stack Diameter	16.00	feet	or		meters
Exit Stack Temperature	532.00	degrees Fahrenheit			

Exit Stack Velocity and/or Flow Rate:

Velocity:	21.60	feet per second		meters per second

and/or

Flow Rate:		actual cubic feet per minute		actual cubic meters per second

[1] - Portable asphalt plants, rock crushers, or concrete plants do not have to provide the requested information in these categories.

SD EForm - 1630 V1

South Dakota Department of Environment & Natural Resources
Protecting SD's Tomorrow...Today

Air Quality Permit Application Form

Boiler Turbine or Furnace

This form is to be submitted, if necessary, along with the Title V (Part 70) Operating Permit or Minor Operating Permit.

(please complete shaded areas)

1. Facility identification (i.e., Boiler #1, Unit #1, etc): No. 1 Hydrocracker Heater 1A
2. Manufacturer: to be determined | Manufacture date: n/a
3. Model number: to be determined
4. Type (i.e., steam boiler, simple cycle combustion turbine, generator, etc.)

process heater

5. Maximum designed operating rate (name plate):

	66.9	million Btus per hour heat input	
or		horsepower with boiler efficiency:	
or		kilowatts with boiler efficiency:	

6. Check the appropriate box(es) for primary and secondary fuels:

☐	Natural gas		☐	Propane	
☐	Distillate oil	Sulfur content		Weight percent	
☐	Residual oil	Sulfur content		Weight percent	
☐	Bituminous Coal	☐	Subbituminous Coal	☐	Lignite Coal
Coal sulfur content		Weight percent	Coal ash content		Weight percent
☑	Other (please specify)	refinery fuel gas			

7. Has a stack test been conducted (check appropriate box)? ☐ Yes ☑ No

If a stack test has been conducted, please attach a copy of the most recent stack test report to this application. If the Department already has a copy of the most recent stack test, please specify the date of most recent stack test.

Date of most recent stack test:

Control Equipment: If applicable, types of air pollution control equipment (Examples: baghouse, cyclone, wet scrubber, electrostatic precipitator, thermal oxidizer, miscellaneous control device, etc.).

n/a

Please complete the appropriate air quality permit application form for each type of control equipment that controls air emissions from this operation.

Stack Information: If this application is a renewal, contact the air program. We may have this information.

X- Coordinate or Easting:		feet	686,739.63	meters
Y- Coordinate or Northing:		feet	4,742,618.00	meters
Base Elevation of Stack:	1,220.00	feet		meters
Stack Height:	200.00	feet		meters
Exit Stack Diameter	5.00	feet		meters
Exit Stack Temperature	650.00	degrees Fahrenheit		

Exit Stack Velocity and/or Flow Rate:

Velocity:	21.80	feet per second		meters per second

and/or

Flow Rate:		actual cubic feet per minute		actual cubic meters per second

South Dakota Department of Environment & Natural Resources
Protecting SD's Tomorrow...Today

Air Quality Permit Application Form

Boiler Turbine or Furnace

This form is to be submitted, if necessary, along with the Title V (Part 70) Operating Permit or Minor Operating Permit.
(please complete shaded areas)

1. Facility identification (i.e., Boiler #1, Unit #1, etc): No. 1 Hydrocracker Heater 1B
2. Manufacturer: to be determined Manufacture date: n/a
3. Model number: to be determined
4. Type (i.e., steam boiler, simple cycle combustion turbine, generator, etc.)

process heater

5. Maximum designed operating rate (name plate):

	66.9	million Btus per hour heat input	
or		horsepower with boiler efficiency:	
or		kilowatts with boiler efficiency:	

6. Check the appropriate box(es) for primary and secondary fuels:

☐	Natural gas		☐	Propane	
☐	Distillate oil	Sulfur content		Weight percent	
☐	Residual oil	Sulfur content		Weight percent	
☐	Bituminous Coal	☐	Subbituminous Coal	☐	Lignite Coal
Coal sulfur content		Weight percent	Coal ash content		Weight percent
☑	Other (please specify)	refinery fuel gas			

7. Has a stack test been conducted (check appropriate box)? ☐ Yes ☑ No

If a stack test has been conducted, please attach a copy of the most recent stack test report to this application. If the Department already has a copy of the most recent stack test, please specify the date of most recent stack test.

Date of most recent stack test:

Control Equipment: If applicable, types of air pollution control equipment (Examples: baghouse, cyclone, wet scrubber, electrostatic precipitator, thermal oxidizer, miscellaneous control device, etc.).

n/a

Please complete the appropriate air quality permit application form for each type of control equipment that controls air emissions from this operation.

Stack Information: If this application is a renewal, contact the air program. We may have this information.

X- Coordinate or Easting:		feet	686,729.44	meters
Y- Coordinate or Northing:		feet	4,742,618.00	meters
Base Elevation of Stack:	1,220.00	feet		meters
Stack Height:	200.00	feet		meters
Exit Stack Diameter	5.00	feet		meters
Exit Stack Temperature	650.00	degrees Fahrenheit		

Exit Stack Velocity and/or Flow Rate:

Velocity:	21.80	feet per second		meters per second

and/or

Flow Rate:		actual cubic feet per minute		actual cubic meters per second

SD EForm - 1630 V1

South Dakota Department of Environment & Natural Resources
Protecting SD's Tomorrow...Today

Air Quality Permit Application Form

Boiler Turbine or Furnace

This form is to be submitted, if necessary, along with the Title V (Part 70) Operating Permit or Minor Operating Permit.
(please complete shaded areas)

1. Facility identification (i.e., Boiler #1, Unit #1, etc): No. 1 Hydrocracker Heater 1C
2. Manufacturer: to be determined | Manufacture date: n/a
3. Model number: to be determined
4. Type (i.e., steam boiler, simple cycle combustion turbine, generator, etc.)

process heater

5. Maximum designed operating rate (name plate):

	66.9	million Btus per hour heat input	
or		horsepower with boiler efficiency:	
or		kilowatts with boiler efficiency:	

6. Check the appropriate box(es) for primary and secondary fuels:

☐	Natural gas		☐	Propane	
☐	Distillate oil	Sulfur content		Weight percent	
☐	Residual oil	Sulfur content		Weight percent	
☐	Bituminous Coal	☐	Subbituminous Coal	☐	Lignite Coal
Coal sulfur content		Weight percent	Coal ash content		Weight percent
☑	Other (please specify)	refinery fuel gas			

7. Has a stack test been conducted (check appropriate box)? ☐ Yes ☑ No

If a stack test has been conducted, please attach a copy of the most recent stack test report to this application. If the Department already has a copy of the most recent stack test, please specify the date of most recent stack test.

Date of most recent stack test:

Control Equipment: If applicable, types of air pollution control equipment (Examples: baghouse, cyclone, wet scrubber, electrostatic precipitator, thermal oxidizer, miscellaneous control device, etc.).

n/a

Please complete the appropriate air quality permit application form for each type of control equipment that controls air emissions from this operation.

Stack Information: If this application is a renewal, contact the air program. We may have this information.

X- Coordinate or Easting:		feet	686,718.00	meters
Y- Coordinate or Northing:		feet	4,742,618.00	meters
Base Elevation of Stack:	1,220.00	feet		meters
Stack Height:	200.00	feet		meters
Exit Stack Diameter	5.00	feet		meters
Exit Stack Temperature	650.00	degrees Fahrenheit		

Exit Stack Velocity and/or Flow Rate:

Velocity:	21.80	feet per second		meters per second

and/or

Flow Rate:		actual cubic feet per minute		actual cubic meters per second

SD EForm - 1630 V1

South Dakota Department of Environment & Natural Resources
Protecting SD's Tomorrow...Today

Air Quality Permit Application Form

Boiler Turbine or Furnace

This form is to be submitted, if necessary, along with the Title V (Part 70) Operating Permit or Minor Operating Permit.
(please complete shaded areas)

1. Facility identification (i.e., Boiler #1, Unit #1, etc): No. 1 Hydrocracker Heater 2A
2. Manufacturer: to be determined Manufacture date: n/a
3. Model number: to be determined
4. Type (i.e., steam boiler, simple cycle combustion turbine, generator, etc.)

process heater

5. Maximum designed operating rate (name plate):

	64.9	million Btus per hour heat input	
or		horsepower with boiler efficiency:	
or		kilowatts with boiler efficiency:	

6. Check the appropriate box(es) for primary and secondary fuels:

☐	Natural gas		☐	Propane	
☐	Distillate oil	Sulfur content		Weight percent	
☐	Residual oil	Sulfur content		Weight percent	
☐	Bituminous Coal	☐	Subbituminous Coal	☐	Lignite Coal
Coal sulfur content		Weight percent	Coal ash content		Weight percent
☑	Other (please specify)	refinery fuel gas			

7. Has a stack test been conducted (check appropriate box)? ☐ Yes ☑ No

If a stack test has been conducted, please attach a copy of the most recent stack test report to this application. If the Department already has a copy of the most recent stack test, please specify the date of most recent stack test.

Date of most recent stack test:

Control Equipment: If applicable, types of air pollution control equipment (Examples: baghouse, cyclone, wet scrubber, electrostatic precipitator, thermal oxidizer, miscellaneous control device, etc.).

n/a

Please complete the appropriate air quality permit application form for each type of control equipment that controls air emissions from this operation.

Stack Information: If this application is a renewal, contact the air program. We may have this information.

X- Coordinate or Easting:		feet	686,706.50	meters
Y- Coordinate or Northing:		feet	4,742,618.00	meters
Base Elevation of Stack:	1,220.00	feet		meters
Stack Height:	200.00	feet		meters
Exit Stack Diameter	4.00	feet		meters
Exit Stack Temperature	474.00	degrees Fahrenheit		

Exit Stack Velocity and/or Flow Rate:

Velocity:	27.80	feet per second		meters per second

and/or

Flow Rate:		actual cubic feet per minute		actual cubic meters per second

SD EForm - 1630 V1

South Dakota Department of Environment & Natural Resources
Protecting SD's Tomorrow...Today

Air Quality Permit Application Form

Boiler Turbine or Furnace

This form is to be submitted, if necessary, along with the Title V (Part 70) Operating Permit or Minor Operating Permit.
(please complete shaded areas)

1. Facility identification (i.e., Boiler #1, Unit #1, etc): No. 1 Hydrocracker Heater 2B
2. Manufacturer: to be determined | Manufacture date: n/a
3. Model number: to be determined
4. Type (i.e., steam boiler, simple cycle combustion turbine, generator, etc.)

process heater

5. Maximum designed operating rate (name plate):

	64.9	million Btus per hour heat input	
or		horsepower with boiler efficiency:	
or		kilowatts with boiler efficiency:	

6. Check the appropriate box(es) for primary and secondary fuels:

☐	Natural gas		☐	Propane	
☐	Distillate oil	Sulfur content		Weight percent	
☐	Residual oil	Sulfur content		Weight percent	
☐	Bituminous Coal	☐	Subbituminous Coal	☐	Lignite Coal
Coal sulfur content		Weight percent	Coal ash content		Weight percent
☑	Other (please specify)	refinery fuel gas			

7. Has a stack test been conducted (check appropriate box)? ☐ Yes ☑ No

If a stack test has been conducted, please attach a copy of the most recent stack test report to this application. If the Department already has a copy of the most recent stack test, please specify the date of most recent stack test.

Date of most recent stack test:

Control Equipment: If applicable, types of air pollution control equipment (Examples: baghouse, cyclone, wet scrubber, electrostatic precipitator, thermal oxidizer, miscellaneous control device, etc.).

n/a

Please complete the appropriate air quality permit application form for each type of control equipment that controls air emissions from this operation.

Stack Information: If this application is a renewal, contact the air program. We may have this information.

X- Coordinate or Easting:		feet	686,695.69	meters
Y- Coordinate or Northing:		feet	4,742,618.00	meters
Base Elevation of Stack:	1,220.00	feet		meters
Stack Height:	200.00	feet		meters
Exit Stack Diameter	4.00	feet		meters
Exit Stack Temperature	474.00	degrees Fahrenheit		

Exit Stack Velocity and/or Flow Rate:

Velocity:	27.80	feet per second		meters per second

and/or

Flow Rate:		actual cubic feet per minute		actual cubic meters per second

SD EForm - 1630 V1

South Dakota Department of Environment & Natural Resources
Protecting SD's Tomorrow...Today

Air Quality Permit Application Form

Boiler Turbine or Furnace

This form is to be submitted, if necessary, along with the Title V (Part 70) Operating Permit or Minor Operating Permit.
(please complete shaded areas)

1. Facility identification (i.e., Boiler #1, Unit #1, etc): No. 2 Hydrocracker Heater 1A
2. Manufacturer: to be determined | Manufacture date: n/a
3. Model number: to be determined
4. Type (i.e., steam boiler, simple cycle combustion turbine, generator, etc.)

process heater

5. Maximum designed operating rate (name plate):

	66.9	million Btus per hour heat input	
or		horsepower with boiler efficiency:	
or		kilowatts with boiler efficiency:	

6. Check the appropriate box(es) for primary and secondary fuels:

☐	Natural gas		☐	Propane	
☐	Distillate oil	Sulfur content		Weight percent	
☐	Residual oil	Sulfur content		Weight percent	
☐	Bituminous Coal	☐	Subbituminous Coal	☐	Lignite Coal
Coal sulfur content		Weight percent	Coal ash content		Weight percent
☑	Other (please specify)	refinery fuel gas			

7. Has a stack test been conducted (check appropriate box)? ☐ Yes ☑ No

If a stack test has been conducted, please attach a copy of the most recent stack test report to this application. If the Department already has a copy of the most recent stack test, please specify the date of most recent stack test.

Date of most recent stack test:

Control Equipment: If applicable, types of air pollution control equipment (Examples: baghouse, cyclone, wet scrubber, electrostatic precipitator, thermal oxidizer, miscellaneous control device, etc.).

n/a

Please complete the appropriate air quality permit application form for each type of control equipment that controls air emissions from this operation.

Stack Information: If this application is a renewal, contact the air program. We may have this information.

X- Coordinate or Easting:		feet	686,912.13	meters
Y- Coordinate or Northing:		feet	4,742,623.00	meters
Base Elevation of Stack:	1,220.00	feet		meters
Stack Height:	200.00	feet		meters
Exit Stack Diameter	5.00	feet		meters
Exit Stack Temperature	650.00	degrees Fahrenheit		

Exit Stack Velocity and/or Flow Rate:

Velocity:	21.80	feet per second		meters per second

and/or

Flow Rate:		actual cubic feet per minute		actual cubic meters per second

South Dakota Department of Environment & Natural Resources
Protecting SD's Tomorrow...Today

Air Quality Permit Application Form

Boiler Turbine or Furnace

This form is to be submitted, if necessary, along with the Title V (Part 70) Operating Permit or Minor Operating Permit.
(please complete shaded areas)

1. Facility identification (i.e., Boiler #1, Unit #1, etc): No. 2 Hydrocracker Heater 1B
2. Manufacturer: to be determined | Manufacture date: n/a
3. Model number: to be determined
4. Type (i.e., steam boiler, simple cycle combustion turbine, generator, etc.)

process heater

5. Maximum designed operating rate (name plate):

	66.9	million Btus per hour heat input	
or		horsepower with boiler efficiency:	
or		kilowatts with boiler efficiency:	

6. Check the appropriate box(es) for primary and secondary fuels:

☐	Natural gas		☐	Propane	
☐	Distillate oil	Sulfur content		Weight percent	
☐	Residual oil	Sulfur content		Weight percent	
☐	Bituminous Coal	☐	Subbituminous Coal	☐	Lignite Coal
Coal sulfur content		Weight percent	Coal ash content		Weight percent
☑	Other (please specify)	refinery fuel gas			

7. Has a stack test been conducted (check appropriate box)? ☐ Yes ☑ No

If a stack test has been conducted, please attach a copy of the most recent stack test report to this application. If the Department already has a copy of the most recent stack test, please specify the date of most recent stack test.

Date of most recent stack test:

Control Equipment: If applicable, types of air pollution control equipment (Examples: baghouse, cyclone, wet scrubber, electrostatic precipitator, thermal oxidizer, miscellaneous control device, etc.).

n/a

Please complete the appropriate air quality permit application form for each type of control equipment that controls air emissions from this operation.

Stack Information: If this application is a renewal, contact the air program. We may have this information.

X- Coordinate or Easting:		feet	686,903.25	meters
Y- Coordinate or Northing:		feet	4,742,623.00	meters
Base Elevation of Stack:	1,220.00	feet		meters
Stack Height:	200.00	feet		meters
Exit Stack Diameter	5.00	feet		meters
Exit Stack Temperature	650.00	degrees Fahrenheit		

Exit Stack Velocity and/or Flow Rate:

Velocity:	21.80	feet per second		meters per second

and/or

Flow Rate:		actual cubic feet per minute		actual cubic meters per second

SD EForm - 1630 V1

South Dakota Department of Environment & Natural Resources
Protecting SD's Tomorrow...Today

Air Quality Permit Application Form

Boiler Turbine or Furnace

This form is to be submitted, if necessary, along with the Title V (Part 70) Operating Permit or Minor Operating Permit.
(please complete shaded areas)

1. Facility identification (i.e., Boiler #1, Unit #1, etc): No. 2 Hydrocracker Heater 1C
2. Manufacturer: to be determined | Manufacture date: n/a
3. Model number: to be determined
4. Type (i.e., steam boiler, simple cycle combustion turbine, generator, etc.)

process heater

5. Maximum designed operating rate (name plate):

	66.9	million Btus per hour heat input	
or		horsepower with boiler efficiency:	
or		kilowatts with boiler efficiency:	

6. Check the appropriate box(es) for primary and secondary fuels:

☐	Natural gas		☐	Propane	
☐	Distillate oil	Sulfur content		Weight percent	
☐	Residual oil	Sulfur content		Weight percent	
☐	Bituminous Coal	☐	Subbituminous Coal	☐	Lignite Coal
Coal sulfur content		Weight percent	Coal ash content		Weight percent
☑	Other (please specify)	refinery fuel gas			

7. Has a stack test been conducted (check appropriate box)? ☐ Yes ☑ No

If a stack test has been conducted, please attach a copy of the most recent stack test report to this application. If the Department already has a copy of the most recent stack test, please specify the date of most recent stack test.

Date of most recent stack test:

Control Equipment: If applicable, types of air pollution control equipment (Examples: baghouse, cyclone, wet scrubber, electrostatic precipitator, thermal oxidizer, miscellaneous control device, etc.).

n/a

Please complete the appropriate air quality permit application form for each type of control equipment that controls air emissions from this operation.

Stack Information: If this application is a renewal, contact the air program. We may have this information.

X- Coordinate or Easting:		feet	686,892.75	meters
Y- Coordinate or Northing:		feet	4,742,623.00	meters
Base Elevation of Stack:	1,220.00	feet		meters
Stack Height:	200.00	feet		meters
Exit Stack Diameter	5.00	feet		meters
Exit Stack Temperature	650.00	degrees Fahrenheit		

Exit Stack Velocity and/or Flow Rate:

Velocity:	21.80	feet per second		meters per second

and/or

Flow Rate:		actual cubic feet per minute		actual cubic meters per second

South Dakota Department of Environment & Natural Resources
Protecting SD's Tomorrow...Today

Air Quality Permit Application Form

Boiler Turbine or Furnace

This form is to be submitted, if necessary, along with the Title V (Part 70) Operating Permit or Minor Operating Permit.
(please complete shaded areas)

1. Facility identification (i.e., Boiler #1, Unit #1, etc): No. 2 Hydrocracker Heater 2A
2. Manufacturer: to be determined | Manufacture date: n/a
3. Model number: to be determined
4. Type (i.e., steam boiler, simple cycle combustion turbine, generator, etc.)

process heater

5. Maximum designed operating rate (name plate):

	64.9	million Btus per hour heat input	
or		horsepower with boiler efficiency:	
or		kilowatts with boiler efficiency:	

6. Check the appropriate box(es) for primary and secondary fuels:

☐	Natural gas		☐	Propane	
☐	Distillate oil	Sulfur content		Weight percent	
☐	Residual oil	Sulfur content		Weight percent	
☐	Bituminous Coal	☐	Subbituminous Coal	☐	Lignite Coal
Coal sulfur content		Weight percent	Coal ash content		Weight percent
☑	Other (please specify)	refinery fuel gas			

7. Has a stack test been conducted (check appropriate box)? ☐ Yes ☑ No

If a stack test has been conducted, please attach a copy of the most recent stack test report to this application. If the Department already has a copy of the most recent stack test, please specify the date of most recent stack test.

Date of most recent stack test:

Control Equipment: If applicable, types of air pollution control equipment (Examples: baghouse, cyclone, wet scrubber, electrostatic precipitator, thermal oxidizer, miscellaneous control device, etc.).

n/a

Please complete the appropriate air quality permit application form for each type of control equipment that controls air emissions from this operation.

Stack Information: If this application is a renewal, contact the air program. We may have this information.

X- Coordinate or Easting:		feet	686,880.94	meters
Y- Coordinate or Northing:		feet	4,742,623.00	meters
Base Elevation of Stack:	1,220.00	feet		meters
Stack Height:	200.00	feet		meters
Exit Stack Diameter	4.00	feet		meters
Exit Stack Temperature	474.00	degrees Fahrenheit		

Exit Stack Velocity and/or Flow Rate:

Velocity:	27.80	feet per second		meters per second

and/or

Flow Rate:		actual cubic feet per minute		actual cubic meters per second

SD EForm - 1630 V1

South Dakota Department of Environment & Natural Resources
Protecting SD's Tomorrow...Today

Air Quality Permit Application Form

Boiler Turbine or Furnace

This form is to be submitted, if necessary, along with the Title V (Part 70) Operating Permit or Minor Operating Permit.

(please complete shaded areas)

1. Facility identification (i.e., Boiler #1, Unit #1, etc): No. 2 Hydrocracker Heater 2B
2. Manufacturer: to be determined | Manufacture date: n/a
3. Model number: to be determined
4. Type (i.e., steam boiler, simple cycle combustion turbine, generator, etc.)

process heater

5. Maximum designed operating rate (name plate):

	64.9	million Btus per hour heat input	
or		horsepower with boiler efficiency:	
or		kilowatts with boiler efficiency:	

6. Check the appropriate box(es) for primary and secondary fuels:

☐	Natural gas		☐	Propane	
☐	Distillate oil	Sulfur content		Weight percent	
☐	Residual oil	Sulfur content		Weight percent	
☐	Bituminous Coal	☐	Subbituminous Coal	☐	Lignite Coal
Coal sulfur content		Weight percent	Coal ash content		Weight percent
☑	Other (please specify)	refinery fuel gas			

7. Has a stack test been conducted (check appropriate box)? ☐ Yes ☑ No

If a stack test has been conducted, please attach a copy of the most recent stack test report to this application. If the Department already has a copy of the most recent stack test, please specify the date of most recent stack test.

Date of most recent stack test:

Control Equipment: If applicable, types of air pollution control equipment (Examples: baghouse, cyclone, wet scrubber, electrostatic precipitator, thermal oxidizer, miscellaneous control device, etc.).

n/a

Please complete the appropriate air quality permit application form for each type of control equipment that controls air emissions from this operation.

Stack Information: If this application is a renewal, contact the air program. We may have this information.

X- Coordinate or Easting:		feet	686,870.75	meters
Y- Coordinate or Northing:		feet	4,742,623.00	meters
Base Elevation of Stack:	1,220.00	feet		meters
Stack Height:	200.00	feet		meters
Exit Stack Diameter	4.00	feet		meters
Exit Stack Temperature	474.00	degrees Fahrenheit		

Exit Stack Velocity and/or Flow Rate:

Velocity:	27.80	feet per second		meters per second

and/or

Flow Rate:		actual cubic feet per minute		actual cubic meters per second

South Dakota Department of Environment & Natural Resources
Protecting SD's Tomorrow...Today

Air Quality Permit Application Form

Miscellaneous Process

This form is to be submitted, if necessary, along with the Title V (Part 70) Operating Permit or Minor Operating Permit.
(please complete shaded areas)

1. Facility identification (i.e., Boiler #1, Unit #1, etc): No. 1 Platformer Catalyst Regenerator
2. Manufacturer: to be determined | Manufacture date: tbd
3. Model number: to be determined
4. Type (i.e., steam boiler, simple cycle combustion turbine, generator, etc.)

continuous catalyst regenerator

5. Maximum designed operating rate (name plate):

n/a
or _____ horsepower
or _____ kilowatts

6. Check the appropriate box(es) for primary and secondary fuels:

☐ Natural gas ☐ Propane
☐ Distillate oil Sulfur content _____ Weight percent
☐ Residual oil Sulfur content _____ Weight percent
☐ Bituminous Coal ☐ Subbituminous Coal ☐ Lignite Coal
Coal sulfur content _____ Weight percent Coal ash content _____ Weight percent
☐ Other (please specify) n/a

7. Has a stack test been conducted (check appropriate box)? ☐ Yes ☑ No

If a stack test has been conducted, please attach a copy of the most recent stack test report to this application. If the Department already has a copy of the most recent stack test, please specify the date of most recent stack test.

Date of most recent stack test: _____

Control Equipment: If applicable, types of air pollution control equipment (Examples: baghouse, cyclone, wet scrubber, electrostatic precipitator, thermal oxidizer, miscellaneous control device, etc.).

caustic scrubber

Please complete the appropriate air quality permit application form for each type of control equipment that controls air emissions from this operation.

Stack Information: If this application is a renewal, contact the air program. We may have this information.

X- Coordinate or Easting:		feet		meters
Y- Coordinate or Northing:		feet		meters
Base Elevation of Stack:		feet		meters
Stack Height:		feet		meters
Exit Stack Diameter		feet		meters
Exit Stack Temperature		degrees Fahrenheit		

Exit Stack Velocity and/or Flow Rate:

Velocity: _____ feet per second _____ meters per second

and/or

Flow Rate: _____ actual cubic feet per minute _____ actual cubic meters per second

No. 1 Platformer catalyst regenerator exhausts to atmosphere through caustic scrubber. See attached E1641V1 form for scrubber stack parameters.

South Dakota Department of Environment & Natural Resources
Protecting SD's Tomorrow...Today

Air Quality Permit Application

Wet Scrubber Data Sheet

This form is to be submitted, if necessary, along with the Title V (Part 70) Operating Permit, Minor Operating Permit, or the General Permits.

(please complete shaded areas)

Equipment and processes served by this wet scrubber (please list all equipment and processes):

Equipment and Processes

1.	Platformer No. 1 Catalyst Regenerator
2.	
3.	
4.	
5.	

Manufacturer Information:

Manufacturer? to be determined

Manufacturer date? to be determined Installation date? to be determined

Manufacturer's designed control efficiency? to be determined %

Type of wet scrubber (please check one)?

☐ Venturi ☐ Demister ☑ Other (specify) to be determined

Scrubbing Additives? to be determined

Wet Scrubber Operation and Maintenance:

Pressure drop across wet scrubber? tbd inches water (minimum) tbd inches water (maximum)

Inlet Temperature? tbd Fahrenheit (minimum) tbd Fahrenheit (maximum)

Outlet Temperature? tbd Fahrenheit (minimum) tbd Fahrenheit (maximum)

Water recycled (check one)? ☑ Yes ☐ No

If yes, number of pond(s): 0 Pond size: n/a Type of liner: n/a

If no, describe type of treatment and location of any planned water discharge from the property:

Describe maintenance of wet scrubber (visual inspection, how often ponds are cleaned, etc.)

to be determined

Stack Information: If this application is a renewal, contact the air program. We may have this information.

X- Coordinate or Easting: [1]		feet	or	686,366.63	meters
Y- Coordinate or Northing: [1]		feet	or	4,742,475.50	meters
Base Elevation of Stack: [1]	1,220.00	feet	or		meters
Stack Height:	160.00	feet	or		meters
Exit Stack Diameter	1.40	feet	or		meters
Exit Stack Temperature	100.00	degrees Fahrenheit			

Exit Stack Velocity and/or Flow Rate:

Velocity:	13.00	feet per second		meters per second

and/or

Flow Rate:		actual cubic feet per minute		actual cubic meters per second

[1] - Portable asphalt plants, rock crushers, or concrete plants do not have to provide the requested information in these categories.

South Dakota Department of Environment & Natural Resources
Protecting SD's Tomorrow...Today

Air Quality Permit Application Form

Miscellaneous Process

This form is to be submitted, if necessary, along with the Title V (Part 70) Operating Permit or Minor Operating Permit.
(please complete shaded areas)

1. Facility identification (i.e., Boiler #1, Unit #1, etc): No. 2 Platformer Catalyst Regenerator
2. Manufacturer: to be determined | Manufacture date: tbd
3. Model number: to be determined
4. Type (i.e., steam boiler, simple cycle combustion turbine, generator, etc.)

continuous catalyst regenerator

5. Maximum designed operating rate (name plate):

n/a
or _____ horsepower
or _____ kilowatts

6. Check the appropriate box(es) for primary and secondary fuels:

☐ Natural gas ☐ Propane
☐ Distillate oil Sulfur content _____ Weight percent
☐ Residual oil Sulfur content _____ Weight percent
☐ Bituminous Coal ☐ Subbituminous Coal ☐ Lignite Coal
Coal sulfur content _____ Weight percent Coal ash content _____ Weight percent
☐ Other (please specify) n/a

7. Has a stack test been conducted (check appropriate box)? ☐ Yes ☑ No

If a stack test has been conducted, please attach a copy of the most recent stack test report to this application. If the Department already has a copy of the most recent stack test, please specify the date of most recent stack test.

Date of most recent stack test: _____

Control Equipment: If applicable, types of air pollution control equipment (Examples: baghouse, cyclone, wet scrubber, electrostatic precipitator, thermal oxidizer, miscellaneous control device, etc.).

caustic scrubber

Please complete the appropriate air quality permit application form for each type of control equipment that controls air emissions from this operation.

Stack Information: If this application is a renewal, contact the air program. We may have this information.

X- Coordinate or Easting:		feet		meters
Y- Coordinate or Northing:		feet		meters
Base Elevation of Stack:		feet		meters
Stack Height:		feet		meters
Exit Stack Diameter		feet		meters
Exit Stack Temperature		degrees Fahrenheit		

Exit Stack Velocity and/or Flow Rate:

Velocity:		feet per second		meters per second

and/or

Flow Rate:		actual cubic feet per minute		actual cubic meters per second

No. 2 Platformer catalyst regenerator exhausts to atmosphere through caustic scrubber. See attached E1641V1 form for scrubber stack parameters.

South Dakota Department of Environment & Natural Resources
Protecting SD's Tomorrow...Today

Air Quality Permit Application

Wet Scrubber Data Sheet

This form is to be submitted, if necessary, along with the Title V (Part 70) Operating Permit, Minor Operating Permit, or the General Permits.

(please complete shaded areas)

Equipment and processes served by this wet scrubber (please list all equipment and processes):

Equipment and Processes

1.	Platformer No. 2 Catalyst Regenerator
2.	
3.	
4.	
5.	

Manufacturer Information:

Manufacturer? to be determined

Manufacturer date? to be determined Installation date? to be determined

Manufacturer's designed control efficiency? to be determined %

Type of wet scrubber (please check one)?

☐ Venturi ☐ Demister ☑ Other (specify) to be determined

Scrubbing Additives? to be determined

Wet Scrubber Operation and Maintenance:

Pressure drop across wet scrubber? tbd inches water (minimum) tbd inches water (maximum)

Inlet Temperature? tbd Fahrenheit (minimum) tbd Fahrenheit (maximum)

Outlet Temperature? tbd Fahrenheit (minimum) tbd Fahrenheit (maximum)

Water recycled (check one)? ☑ Yes ☐ No

If yes, number of pond(s): 0 Pond size: n/a Type of liner: n/a

If no, describe type of treatment and location of any planned water discharge from the property:

Describe maintenance of wet scrubber (visual inspection, how often ponds are cleaned, etc.)

to be determined

Stack Information: If this application is a renewal, contact the air program. We may have this information.

X- Coordinate or Easting: [1]		feet	or	686,546.56	meters
Y- Coordinate or Northing: [1]		feet	or	4,742,481.00	meters
Base Elevation of Stack: [1]	1,220.00	feet	or		meters
Stack Height:	160.00	feet	or		meters
Exit Stack Diameter	1.40	feet	or		meters
Exit Stack Temperature	100.00	degrees Fahrenheit			

Exit Stack Velocity and/or Flow Rate:

Velocity:	13.00	feet per second		meters per second

and/or

Flow Rate:		actual cubic feet per minute		actual cubic meters per second

[1] - Portable asphalt plants, rock crushers, or concrete plants do not have to provide the requested information in these categories.

South Dakota Department of Environment & Natural Resources
Protecting SD's Tomorrow...Today

Air Quality Permit Application Form

Miscellaneous Process

This form is to be submitted, if necessary, along with the Title V (Part 70) Operating Permit or Minor Operating Permit.
(please complete shaded areas)

1. Facility identification (i.e., Boiler #1, Unit #1, etc): Oleflex Catalyst Regenerator
2. Manufacturer: to be determined Manufacture date: tbd
3. Model number: to be determined
4. Type (i.e., steam boiler, simple cycle combustion turbine, generator, etc.)

continuous catalyst regenerator

5. Maximum designed operating rate (name plate):

n/a
or horsepower
or kilowatts

6. Check the appropriate box(es) for primary and secondary fuels:

☐ Natural gas ☐ Propane
☐ Distillate oil Sulfur content Weight percent
☐ Residual oil Sulfur content Weight percent
☐ Bituminous Coal ☐ Subbituminous Coal ☐ Lignite Coal
Coal sulfur content Weight percent Coal ash content Weight percent
☐ Other (please specify) n/a

7. Has a stack test been conducted (check appropriate box)? ☐ Yes ☑ No

If a stack test has been conducted, please attach a copy of the most recent stack test report to this application. If the Department already has a copy of the most recent stack test, please specify the date of most recent stack test.

Date of most recent stack test:

Control Equipment: If applicable, types of air pollution control equipment (Examples: baghouse, cyclone, wet scrubber, electrostatic precipitator, thermal oxidizer, miscellaneous control device, etc.).

caustic scrubber

Please complete the appropriate air quality permit application form for each type of control equipment that controls air emissions from this operation.

Stack Information: If this application is a renewal, contact the air program. We may have this information.

X- Coordinate or Easting:		feet		meters
Y- Coordinate or Northing:		feet		meters
Base Elevation of Stack:		feet		meters
Stack Height:		feet		meters
Exit Stack Diameter		feet		meters
Exit Stack Temperature		degrees Fahrenheit		

Exit Stack Velocity and/or Flow Rate:

Velocity: _____ feet per second _____ meters per second

and/or

Flow Rate: _____ actual cubic feet per minute _____ actual cubic meters per second

Oleflex catalyst regenerator exhausts to atmosphere through caustic scrubber.
See attached E1641V1 form for scrubber stack parameters.

South Dakota Department of Environment & Natural Resources
Protecting SD's Tomorrow...Today

Air Quality Permit Application

Wet Scrubber Data Sheet

This form is to be submitted, if necessary, along with the Title V (Part 70) Operating Permit, Minor Operating Permit, or the General Permits.

(please complete shaded areas)

Equipment and processes served by this wet scrubber (please list all equipment and processes):

	Equipment and Processes
1.	Oleflex Catalyst Regenerator
2.	
3.	
4.	
5.	

Manufacturer Information:

Manufacturer? to be determined

Manufacturer date? to be determined | Installation date? to be determined

Manufacturer's designed control efficiency? to be determined %

Type of wet scrubber (please check one)?

☐ Venturi ☐ Demister ☑ Other (specify) to be determined

Scrubbing Additives? to be determined

Wet Scrubber Operation and Maintenance:

Pressure drop across wet scrubber? tbd inches water (minimum) tbd inches water (maximum)

Inlet Temperature? tbd Fahrenheit (minimum) tbd Fahrenheit (maximum)

Outlet Temperature? tbd Fahrenheit (minimum) tbd Fahrenheit (maximum)

Water recycled (check one)? ☑ Yes ☐ No

If yes, number of pond(s): 0 Pond size: n/a Type of liner: n/a

If no, describe type of treatment and location of any planned water discharge from the property:

Describe maintenance of wet scrubber (visual inspection, how often ponds are cleaned, etc.)

to be determined

Stack Information: If this application is a renewal, contact the air program. We may have this information.

X- Coordinate or Easting: [1]		feet	or	686,588.69	meters
Y- Coordinate or Northing: [1]		feet	or	4,742,265.50	meters
Base Elevation of Stack: [1]	1,220.00	feet	or		meters
Stack Height:	160.00	feet	or		meters
Exit Stack Diameter	0.50	feet	or		meters
Exit Stack Temperature	100.00	degrees Fahrenheit			

Exit Stack Velocity and/or Flow Rate:

Velocity:	18.00	feet per second		meters per second

and/or

Flow Rate:		actual cubic feet per minute		actual cubic meters per second

[1] - Portable asphalt plants, rock crushers, or concrete plants do not have to provide the requested information in these categories.

South Dakota Department of Environment & Natural Resources
Protecting SD's Tomorrow...Today

Air Quality Permit Application Form

Miscellaneous Process

This form is to be submitted, if necessary, along with the Title V (Part 70) Operating Permit or Minor Operating Permit.

(please complete shaded areas)

1. Facility identification (i.e., Boiler #1, Unit #1, etc): Cooling tower
2. Manufacturer: to be determined Manufacture date: tbd
3. Model number: to be determined
4. Type (i.e., steam boiler, simple cycle combustion turbine, generator, etc.)

mechanical draft, 13 cells

5. Maximum designed operating rate (name plate):

130,000 gallons per minute

or _____ horsepower

or _____ kilowatts

6. Check the appropriate box(es) for primary and secondary fuels:

☐ Natural gas ☐ Propane

☐ Distillate oil Sulfur content _____ Weight percent

☐ Residual oil Sulfur content _____ Weight percent

☐ Bituminous Coal ☐ Subbituminous Coal ☐ Lignite Coal

Coal sulfur content _____ Weight percent Coal ash content _____ Weight percent

☐ Other (please specify) n/a

7. Has a stack test been conducted (check appropriate box)? ☐ Yes ☑ No

If a stack test has been conducted, please attach a copy of the most recent stack test report to this application. If the Department already has a copy of the most recent stack test, please specify the date of most recent stack test.

Date of most recent stack test: _____

Control Equipment: If applicable, types of air pollution control equipment (Examples: baghouse, cyclone, wet scrubber, electrostatic precipitator, thermal oxidizer, miscellaneous control device, etc.).

drift eliminators

Please complete the appropriate air quality permit application form for each type of control equipment that controls air emissions from this operation.

Stack Information: If this application is a renewal, contact the air program. We may have this information.

X- Coordinate or Easting:		feet		meters
Y- Coordinate or Northing:		feet		meters
Base Elevation of Stack:		feet		meters
Stack Height:		feet		meters
Exit Stack Diameter		feet		meters
Exit Stack Temperature		degrees Fahrenheit		

Exit Stack Velocity and/or Flow Rate:

Velocity: _____ feet per second _____ meters per second

and/or

Flow Rate: _____ actual cubic feet per minute _____ actual cubic meters per second

Cooling tower exhausts to atmosphere through thirteen drift eliminators. See attached E1639V1 form for drift eliminator stack parameters.

Air Quality Permit Application Form

Miscellaneous Control Device

This form is to be submitted, if necessary, along with the Title V (Part 70) Operating Permit, Minor Operating Permit, or the General Permits.

(please complete shaded areas)

Describe the miscellaneous control device and how it works:

A separate drift eliminator is used on each cell of the mechanical draft cooling tower. The drift eliminators comprise baffles or similar equipment that provide multiple directional changes of airflow while preventing the escape of water droplets.

Equipment and processes served by this baghouse (please list all equipment and processes):

	Equipment and Processes
1.	Cooling tower
2.	
3.	
4.	
5.	

Manufacturer Information:

Manufacturer?	to be determined (tbd)		
Manufacturer date?	tbd	Installation date?	tbd
Manufacturer's designed control efficiency?	tbd	%	

Miscellaneous Control Device Operation and Maintenance:

Pressure drop across control unit?	n/a	Inches water (minimum)	n/a	inches water (maximum)
Inlet Temperature?	n/a	Fahrenheit (minimum)	n/a	Fahrenheit (maximum)
Outlet Temperature?	n/a	Fahrenheit (minimum)	n/a	Fahrenheit (maximum)

Describe maintenance of control unit (use of visual inspections, maintenance schedule, etc.):

to be determined

Stack Information: If this application is a renewal, contact the air program. We may have this information.

X- Coordinate or Easting: [1]		feet	or	687,188.13	meters
Y- Coordinate or Northing: [1]		feet	or	4,742,281.00	meters
Base Elevation of Stack: [1]	1,220.00	feet	or		meters
Stack Height:	50.00	feet	or		meters
Exit Stack Diameter	35.00	feet	or		meters
Exit Stack Temperature	ambient	degrees Fahrenheit			

Exit Stack Velocity and/or Flow Rate:

Velocity:	22.00	feet per second		meters per second

and/or

Flow Rate:		actual cubic feet per minute		actual cubic meters per second

[1] - Portable asphalt plants, rock crushers, or concrete plants do not have to provide the requested information in these categories.

Air Quality Permit Application Form

Miscellaneous Control Device

This form is to be submitted, if necessary, along with the Title V (Part 70) Operating Permit, Minor Operating Permit, or the General Permits.

(please complete shaded areas)

Describe the miscellaneous control device and how it works:

A separate drift eliminator is used on each cell of the mechanical draft cooling tower. The drift eliminators comprise baffles or similar equipment that provide multiple directional changes of airflow while preventing the escape of water droplets.

Equipment and processes served by this baghouse (please list all equipment and processes):

	Equipment and Processes
1.	Cooling tower
2.	
3.	
4.	
5.	

Manufacturer Information:

Manufacturer?	to be determined (tbd)		
Manufacturer date?	tbd	Installation date?	tbd
Manufacturer's designed control efficiency?	tbd	%	

Miscellaneous Control Device Operation and Maintenance:

Pressure drop across control unit?	n/a	Inches water (minimum)	n/a	inches water (maximum)
Inlet Temperature?	n/a	Fahrenheit (minimum)	n/a	Fahrenheit (maximum)
Outlet Temperature?	n/a	Fahrenheit (minimum)	n/a	Fahrenheit (maximum)

Describe maintenance of control unit (use of visual inspections, maintenance schedule, etc.):

to be determined

Stack Information: If this application is a renewal, contact the air program. We may have this information.

X- Coordinate or Easting: [1]		feet	or	687,200.75	meters
Y- Coordinate or Northing: [1]		feet	or	4,742,281.00	meters
Base Elevation of Stack: [1]	1,220.00	feet	or		meters
Stack Height:	50.00	feet	or		meters
Exit Stack Diameter	35.00	feet	or		meters
Exit Stack Temperature	ambient	degrees Fahrenheit			

Exit Stack Velocity and/or Flow Rate:

Velocity:	22.00	feet per second		meters per second

and/or

Flow Rate:		actual cubic feet per minute		actual cubic meters per second

[1] - Portable asphalt plants, rock crushers, or concrete plants do not have to provide the requested information in these categories.

Air Quality Permit Application Form

Miscellaneous Control Device

This form is to be submitted, if necessary, along with the Title V (Part 70) Operating Permit, Minor Operating Permit, or the General Permits.

(please complete shaded areas)

Describe the miscellaneous control device and how it works:

A separate drift eliminator is used on each cell of the mechanical draft cooling tower. The drift eliminators comprise baffles or similar equipment that provide multiple directional changes of airflow while preventing the escape of water droplets.

Equipment and processes served by this baghouse (please list all equipment and processes):

	Equipment and Processes
1.	Cooling tower
2.	
3.	
4.	
5.	

Manufacturer Information:

Manufacturer?	to be determined (tbd)		
Manufacturer date?	tbd	Installation date?	tbd
Manufacturer's designed control efficiency?	tbd	%	

Miscellaneous Control Device Operation and Maintenance:

Pressure drop across control unit?	n/a	Inches water (minimum)	n/a	inches water (maximum)
Inlet Temperature?	n/a	Fahrenheit (minimum)	n/a	Fahrenheit (maximum)
Outlet Temperature?	n/a	Fahrenheit (minimum)	n/a	Fahrenheit (maximum)

Describe maintenance of control unit (use of visual inspections, maintenance schedule, etc.):

to be determined

Stack Information: If this application is a renewal, contact the air program. We may have this information.

X- Coordinate or Easting: [1]		feet	or	687,187.38	meters
Y- Coordinate or Northing: [1]		feet	or	4,742,266.00	meters
Base Elevation of Stack: [1]	1,220.00	feet	or		meters
Stack Height:	50.00	feet	or		meters
Exit Stack Diameter	35.00	feet	or		meters
Exit Stack Temperature	ambient	degrees Fahrenheit			

Exit Stack Velocity and/or Flow Rate:

Velocity:	22.00	feet per second		meters per second

and/or

Flow Rate:		actual cubic feet per minute		actual cubic meters per second

[1] - Portable asphalt plants, rock crushers, or concrete plants do not have to provide the requested information in these categories.

Air Quality Permit Application Form

Miscellaneous Control Device

This form is to be submitted, if necessary, along with the Title V (Part 70) Operating Permit, Minor Operating Permit, or the General Permits.

(please complete shaded areas)

Describe the miscellaneous control device and how it works:

A separate drift eliminator is used on each cell of the mechanical draft cooling tower. The drift eliminators comprise baffles or similar equipment that provide multiple directional changes of airflow while preventing the escape of water droplets.

Equipment and processes served by this baghouse (please list all equipment and processes):

	Equipment and Processes
1.	Cooling tower
2.	
3.	
4.	
5.	

Manufacturer Information:

Manufacturer?	to be determined (tbd)		
Manufacturer date?	tbd	Installation date?	tbd
Manufacturer's designed control efficiency?	tbd	%	

Miscellaneous Control Device Operation and Maintenance:

Pressure drop across control unit?	n/a	Inches water (minimum)	n/a	inches water (maximum)
Inlet Temperature?	n/a	Fahrenheit (minimum)	n/a	Fahrenheit (maximum)
Outlet Temperature?	n/a	Fahrenheit (minimum)	n/a	Fahrenheit (maximum)

Describe maintenance of control unit (use of visual inspections, maintenance schedule, etc.):

to be determined

Stack Information: If this application is a renewal, contact the air program. We may have this information.

X- Coordinate or Easting: [1]		feet	or	687,200.75	meters
Y- Coordinate or Northing: [1]		feet	or	4,742,266.50	meters
Base Elevation of Stack: [1]	1,220.00	feet	or		meters
Stack Height:	50.00	feet	or		meters
Exit Stack Diameter	35.00	feet	or		meters
Exit Stack Temperature	ambient	degrees Fahrenheit			

Exit Stack Velocity and/or Flow Rate:

Velocity:	22.00	feet per second		meters per second

and/or

Flow Rate:		actual cubic feet per minute		actual cubic meters per second

[1] - Portable asphalt plants, rock crushers, or concrete plants do not have to provide the requested information in these categories.

Air Quality Permit Application Form

Miscellaneous Control Device

This form is to be submitted, if necessary, along with the Title V (Part 70) Operating Permit, Minor Operating Permit, or the General Permits.

(please complete shaded areas)

Describe the miscellaneous control device and how it works:

A separate drift eliminator is used on each cell of the mechanical draft cooling tower. The drift eliminators comprise baffles or similar equipment that provide multiple directional changes of airflow while preventing the escape of water droplets.

Equipment and processes served by this baghouse (please list all equipment and processes):

	Equipment and Processes
1.	Cooling tower
2.	
3.	
4.	
5.	

Manufacturer Information:

Manufacturer?	to be determined (tbd)		
Manufacturer date?	tbd	Installation date?	tbd
Manufacturer's designed control efficiency?	tbd	%	

Miscellaneous Control Device Operation and Maintenance:

Pressure drop across control unit?	n/a	Inches water (minimum)	n/a	inches water (maximum)
Inlet Temperature?	n/a	Fahrenheit (minimum)	n/a	Fahrenheit (maximum)
Outlet Temperature?	n/a	Fahrenheit (minimum)	n/a	Fahrenheit (maximum)

Describe maintenance of control unit (use of visual inspections, maintenance schedule, etc.):

to be determined

Stack Information: If this application is a renewal, contact the air program. We may have this information.

X- Coordinate or Easting: [1]		feet	or	687,187.38	meters
Y- Coordinate or Northing: [1]		feet	or	4,742,249.50	meters
Base Elevation of Stack: [1]	1,220.00	feet	or		meters
Stack Height:	50.00	feet	or		meters
Exit Stack Diameter	35.00	feet	or		meters
Exit Stack Temperature	ambient	degrees Fahrenheit			

Exit Stack Velocity and/or Flow Rate:

Velocity:	22.00	feet per second		meters per second

and/or

Flow Rate:		actual cubic feet per minute		actual cubic meters per second

[1] - Portable asphalt plants, rock crushers, or concrete plants do not have to provide the requested information in these categories.

Air Quality Permit Application Form

Miscellaneous Control Device

This form is to be submitted, if necessary, along with the Title V (Part 70) Operating Permit, Minor Operating Permit, or the General Permits.

(please complete shaded areas)

Describe the miscellaneous control device and how it works:

A separate drift eliminator is used on each cell of the mechanical draft cooling tower. The drift eliminators comprise baffles or similar equipment that provide multiple directional changes of airflow while preventing the escape of water droplets.

Equipment and processes served by this baghouse (please list all equipment and processes):

	Equipment and Processes
1.	Cooling tower
2.	
3.	
4.	
5.	

Manufacturer Information:

Manufacturer?	to be determined (tbd)		
Manufacturer date?	tbd	Installation date?	tbd
Manufacturer's designed control efficiency?	tbd	%	

Miscellaneous Control Device Operation and Maintenance:

Pressure drop across control unit?	n/a	Inches water (minimum)	n/a	inches water (maximum)
Inlet Temperature?	n/a	Fahrenheit (minimum)	n/a	Fahrenheit (maximum)
Outlet Temperature?	n/a	Fahrenheit (minimum)	n/a	Fahrenheit (maximum)

Describe maintenance of control unit (use of visual inspections, maintenance schedule, etc.):

to be determined

Stack Information: If this application is a renewal, contact the air program. We may have this information.

X- Coordinate or Easting: [1]		feet	or	687,200.75	meters
Y- Coordinate or Northing: [1]		feet	or	4,742,250.50	meters
Base Elevation of Stack: [1]	1,220.00	feet	or		meters
Stack Height:	50.00	feet	or		meters
Exit Stack Diameter	35.00	feet	or		meters
Exit Stack Temperature	ambient	degrees Fahrenheit			

Exit Stack Velocity and/or Flow Rate:

Velocity:	22.00	feet per second		meters per second

and/or

Flow Rate:		actual cubic feet per minute		actual cubic meters per second

[1] - Portable asphalt plants, rock crushers, or concrete plants do not have to provide the requested information in these categories.

Air Quality Permit Application Form

Miscellaneous Control Device

This form is to be submitted, if necessary, along with the Title V (Part 70) Operating Permit, Minor Operating Permit, or the General Permits.

(please complete shaded areas)

Describe the miscellaneous control device and how it works:

A separate drift eliminator is used on each cell of the mechanical draft cooling tower. The drift eliminators comprise baffles or similar equipment that provide multiple directional changes of airflow while preventing the escape of water droplets.

Equipment and processes served by this baghouse (please list all equipment and processes):

	Equipment and Processes
1.	Cooling tower
2.	
3.	
4.	
5.	

Manufacturer Information:

Manufacturer?	to be determined (tbd)		
Manufacturer date?	tbd	Installation date?	tbd
Manufacturer's designed control efficiency?	tbd	%	

Miscellaneous Control Device Operation and Maintenance:

Pressure drop across control unit?	n/a	Inches water (minimum)	n/a	inches water (maximum)
Inlet Temperature?	n/a	Fahrenheit (minimum)	n/a	Fahrenheit (maximum)
Outlet Temperature?	n/a	Fahrenheit (minimum)	n/a	Fahrenheit (maximum)

Describe maintenance of control unit (use of visual inspections, maintenance schedule, etc.):

to be determined

Stack Information: If this application is a renewal, contact the air program. We may have this information.

X- Coordinate or Easting: [1]		feet	or	687,187.38	meters
Y- Coordinate or Northing: [1]		feet	or	4,742,233.50	meters
Base Elevation of Stack: [1]	1,220.00	feet	or		meters
Stack Height:	50.00	feet	or		meters
Exit Stack Diameter	35.00	feet	or		meters
Exit Stack Temperature	ambient	degrees Fahrenheit			

Exit Stack Velocity and/or Flow Rate:

Velocity:	22.00	feet per second		meters per second

and/or

Flow Rate:		actual cubic feet per minute		actual cubic meters per second

[1] - Portable asphalt plants, rock crushers, or concrete plants do not have to provide the requested information in these categories.

Air Quality Permit Application Form

Miscellaneous Control Device

This form is to be submitted, if necessary, along with the Title V (Part 70) Operating Permit, Minor Operating Permit, or the General Permits.

(please complete shaded areas)

Describe the miscellaneous control device and how it works:

A separate drift eliminator is used on each cell of the mechanical draft cooling tower. The drift eliminators comprise baffles or similar equipment that provide multiple directional changes of airflow while preventing the escape of water droplets.

Equipment and processes served by this baghouse (please list all equipment and processes):

	Equipment and Processes
1.	Cooling tower
2.	
3.	
4.	
5.	

Manufacturer Information:

Manufacturer?	to be determined (tbd)		
Manufacturer date?	tbd	Installation date?	tbd
Manufacturer's designed control efficiency?	tbd	%	

Miscellaneous Control Device Operation and Maintenance:

Pressure drop across control unit?	n/a	Inches water (minimum)	n/a	inches water (maximum)
Inlet Temperature?	n/a	Fahrenheit (minimum)	n/a	Fahrenheit (maximum)
Outlet Temperature?	n/a	Fahrenheit (minimum)	n/a	Fahrenheit (maximum)

Describe maintenance of control unit (use of visual inspections, maintenance schedule, etc.):

to be determined

Stack Information: If this application is a renewal, contact the air program. We may have this information.

X- Coordinate or Easting: [1]		feet	or	687,200.75	meters
Y- Coordinate or Northing: [1]		feet	or	4,742,234.00	meters
Base Elevation of Stack: [1]	1,220.00	feet	or		meters
Stack Height:	50.00	feet	or		meters
Exit Stack Diameter	35.00	feet	or		meters
Exit Stack Temperature	ambient	degrees Fahrenheit			

Exit Stack Velocity and/or Flow Rate:

Velocity:	22.00	feet per second		meters per second

and/or

Flow Rate:		actual cubic feet per minute		actual cubic meters per second

[1] - Portable asphalt plants, rock crushers, or concrete plants do not have to provide the requested information in these categories.

Air Quality Permit Application Form

Miscellaneous Control Device

This form is to be submitted, if necessary, along with the Title V (Part 70) Operating Permit, Minor Operating Permit, or the General Permits.

(please complete shaded areas)

Describe the miscellaneous control device and how it works:

A separate drift eliminator is used on each cell of the mechanical draft cooling tower. The drift eliminators comprise baffles or similar equipment that provide multiple directional changes of airflow while preventing the escape of water droplets.

Equipment and processes served by this baghouse (please list all equipment and processes):

	Equipment and Processes
1.	Cooling tower
2.	
3.	
4.	
5.	

Manufacturer Information:

Manufacturer?	to be determined (tbd)		
Manufacturer date?	tbd	Installation date?	tbd
Manufacturer's designed control efficiency?	tbd	%	

Miscellaneous Control Device Operation and Maintenance:

Pressure drop across control unit?	n/a	Inches water (minimum)	n/a	inches water (maximum)
Inlet Temperature?	n/a	Fahrenheit (minimum)	n/a	Fahrenheit (maximum)
Outlet Temperature?	n/a	Fahrenheit (minimum)	n/a	Fahrenheit (maximum)

Describe maintenance of control unit (use of visual inspections, maintenance schedule, etc.):

to be determined

Stack Information: If this application is a renewal, contact the air program. We may have this information.

X- Coordinate or Easting: [1]		feet	or	687,187.38	meters
Y- Coordinate or Northing: [1]		feet	or	4,742,218.50	meters
Base Elevation of Stack: [1]	1,220.00	feet	or		meters
Stack Height:	50.00	feet	or		meters
Exit Stack Diameter	35.00	feet	or		meters
Exit Stack Temperature	ambient	degrees Fahrenheit			

Exit Stack Velocity and/or Flow Rate:

Velocity:	22.00	feet per second		meters per second

and/or

Flow Rate:		actual cubic feet per minute		actual cubic meters per second

[1] - Portable asphalt plants, rock crushers, or concrete plants do not have to provide the requested information in these categories.

Air Quality Permit Application Form

Miscellaneous Control Device

This form is to be submitted, if necessary, along with the Title V (Part 70) Operating Permit, Minor Operating Permit, or the General Permits.

(please complete shaded areas)

Describe the miscellaneous control device and how it works:

A separate drift eliminator is used on each cell of the mechanical draft cooling tower. The drift eliminators comprise baffles or similar equipment that provide multiple directional changes of airflow while preventing the escape of water droplets.

Equipment and processes served by this baghouse (please list all equipment and processes):

	Equipment and Processes
1.	Cooling tower
2.	
3.	
4.	
5.	

Manufacturer Information:

Manufacturer?	to be determined (tbd)		
Manufacturer date?	tbd	Installation date?	tbd
Manufacturer's designed control efficiency?	tbd	%	

Miscellaneous Control Device Operation and Maintenance:

Pressure drop across control unit?	n/a	Inches water (minimum)	n/a	inches water (maximum)
Inlet Temperature?	n/a	Fahrenheit (minimum)	n/a	Fahrenheit (maximum)
Outlet Temperature?	n/a	Fahrenheit (minimum)	n/a	Fahrenheit (maximum)

Describe maintenance of control unit (use of visual inspections, maintenance schedule, etc.):

to be determined

Stack Information: If this application is a renewal, contact the air program. We may have this information.

X- Coordinate or Easting: [1]		feet	or	687,200.75	meters
Y- Coordinate or Northing: [1]		feet	or	4,742,219.50	meters
Base Elevation of Stack: [1]	1,220.00	feet	or		meters
Stack Height:	50.00	feet	or		meters
Exit Stack Diameter	35.00	feet	or		meters
Exit Stack Temperature	ambient	degrees Fahrenheit			

Exit Stack Velocity and/or Flow Rate:

Velocity:	22.00	feet per second		meters per second

and/or

Flow Rate:		actual cubic feet per minute		actual cubic meters per second

[1] - Portable asphalt plants, rock crushers, or concrete plants do not have to provide the requested information in these categories.

Air Quality Permit Application Form

Miscellaneous Control Device

This form is to be submitted, if necessary, along with the Title V (Part 70) Operating Permit, Minor Operating Permit, or the General Permits.

(please complete shaded areas)

Describe the miscellaneous control device and how it works:

A separate drift eliminator is used on each cell of the mechanical draft cooling tower. The drift eliminators comprise baffles or similar equipment that provide multiple directional changes of airflow while preventing the escape of water droplets.

Equipment and processes served by this baghouse (please list all equipment and processes):

	Equipment and Processes
1.	Cooling tower
2.	
3.	
4.	
5.	

Manufacturer Information:

Manufacturer?	to be determined (tbd)		
Manufacturer date?	tbd	Installation date?	tbd
Manufacturer's designed control efficiency?	tbd	%	

Miscellaneous Control Device Operation and Maintenance:

Pressure drop across control unit?	n/a	Inches water (minimum)	n/a	inches water (maximum)
Inlet Temperature?	n/a	Fahrenheit (minimum)	n/a	Fahrenheit (maximum)
Outlet Temperature?	n/a	Fahrenheit (minimum)	n/a	Fahrenheit (maximum)

Describe maintenance of control unit (use of visual inspections, maintenance schedule, etc.):

to be determined

Stack Information: If this application is a renewal, contact the air program. We may have this information.

X- Coordinate or Easting: [1]		feet	or	687,187.38	meters
Y- Coordinate or Northing: [1]		feet	or	4,742,206.50	meters
Base Elevation of Stack: [1]	1,220.00	feet	or		meters
Stack Height:	50.00	feet	or		meters
Exit Stack Diameter	35.00	feet	or		meters
Exit Stack Temperature	ambient	degrees Fahrenheit			

Exit Stack Velocity and/or Flow Rate:

Velocity:	22.00	feet per second		meters per second

and/or

Flow Rate:		actual cubic feet per minute		actual cubic meters per second

[1] - Portable asphalt plants, rock crushers, or concrete plants do not have to provide the requested information in these categories.

Air Quality Permit Application Form

Miscellaneous Control Device

This form is to be submitted, if necessary, along with the Title V (Part 70) Operating Permit, Minor Operating Permit, or the General Permits.

(please complete shaded areas)

Describe the miscellaneous control device and how it works:

A separate drift eliminator is used on each cell of the mechanical draft cooling tower. The drift eliminators comprise baffles or similar equipment that provide multiple directional changes of airflow while preventing the escape of water droplets.

Equipment and processes served by this baghouse (please list all equipment and processes):

	Equipment and Processes
1.	Cooling tower
2.	
3.	
4.	
5.	

Manufacturer Information:

Manufacturer?	to be determined (tbd)		
Manufacturer date?	tbd	Installation date?	tbd
Manufacturer's designed control efficiency?	tbd	%	

Miscellaneous Control Device Operation and Maintenance:

Pressure drop across control unit?	n/a	Inches water (minimum)	n/a	inches water (maximum)
Inlet Temperature?	n/a	Fahrenheit (minimum)	n/a	Fahrenheit (maximum)
Outlet Temperature?	n/a	Fahrenheit (minimum)	n/a	Fahrenheit (maximum)

Describe maintenance of control unit (use of visual inspections, maintenance schedule, etc.):

to be determined

Stack Information: If this application is a renewal, contact the air program. We may have this information.

X- Coordinate or Easting: [1]		feet	or	687,200.75	meters
Y- Coordinate or Northing: [1]		feet	or	4,742,205.50	meters
Base Elevation of Stack: [1]	1,220.00	feet	or		meters
Stack Height:	50.00	feet	or		meters
Exit Stack Diameter	35.00	feet	or		meters
Exit Stack Temperature	ambient	degrees Fahrenheit			

Exit Stack Velocity and/or Flow Rate:

Velocity:	22.00	feet per second		meters per second

and/or

Flow Rate:		actual cubic feet per minute		actual cubic meters per second

[1] - Portable asphalt plants, rock crushers, or concrete plants do not have to provide the requested information in these categories.

Air Quality Permit Application Form

Miscellaneous Control Device

This form is to be submitted, if necessary, along with the Title V (Part 70) Operating Permit, Minor Operating Permit, or the General Permits.

(please complete shaded areas)

Describe the miscellaneous control device and how it works:

A separate drift eliminator is used on each cell of the mechanical draft cooling tower. The drift eliminators comprise baffles or similar equipment that provide multiple directional changes of airflow while preventing the escape of water droplets.

Equipment and processes served by this baghouse (please list all equipment and processes):

	Equipment and Processes
1.	Cooling tower
2.	
3.	
4.	
5.	

Manufacturer Information:

Manufacturer?	to be determined (tbd)		
Manufacturer date?	tbd	Installation date?	tbd
Manufacturer's designed control efficiency?	tbd	%	

Miscellaneous Control Device Operation and Maintenance:

Pressure drop across control unit?	n/a	Inches water (minimum)	n/a	inches water (maximum)
Inlet Temperature?	n/a	Fahrenheit (minimum)	n/a	Fahrenheit (maximum)
Outlet Temperature?	n/a	Fahrenheit (minimum)	n/a	Fahrenheit (maximum)

Describe maintenance of control unit (use of visual inspections, maintenance schedule, etc.):

to be determined

Stack Information: If this application is a renewal, contact the air program. We may have this information.

X- Coordinate or Easting: [1]		feet	or	687,186.69	meters
Y- Coordinate or Northing: [1]		feet	or	4,742,194.00	meters
Base Elevation of Stack: [1]	1,220.00	feet	or		meters
Stack Height:	50.00	feet	or		meters
Exit Stack Diameter	35.00	feet	or		meters
Exit Stack Temperature	ambient	degrees Fahrenheit			

Exit Stack Velocity and/or Flow Rate:

Velocity:	22.00	feet per second		meters per second

and/or

Flow Rate:		actual cubic feet per minute		actual cubic meters per second

[1] - Portable asphalt plants, rock crushers, or concrete plants do not have to provide the requested information in these categories.

South Dakota Department of Environment & Natural Resources
Protecting SD's Tomorrow...Today

Air Quality Permit Application Form

Miscellaneous Process

This form is to be submitted, if necessary, along with the Title V (Part 70) Operating Permit or Minor Operating Permit.
(please complete shaded areas)

1. Facility identification (i.e., Boiler #1, Unit #1, etc): Sulfur Recovery Plant
2. Manufacturer: to be determined Manufacture date: tbd
3. Model number: to be determined
4. Type (i.e., steam boiler, simple cycle combustion turbine, generator, etc.)

Claus process

5. Maximum designed operating rate (name plate):

2,040 long tons per day
or _____ horsepower
or _____ kilowatts

6. Check the appropriate box(es) for primary and secondary fuels:

☐ Natural gas ☐ Propane
☐ Distillate oil Sulfur content _____ Weight percent
☐ Residual oil Sulfur content _____ Weight percent
☐ Bituminous Coal ☐ Subbituminous Coal ☐ Lignite Coal
Coal sulfur content _____ Weight percent Coal ash content _____ Weight percent
☐ Other (please specify) n/a

7. Has a stack test been conducted (check appropriate box)? ☐ Yes ☑ No

If a stack test has been conducted, please attach a copy of the most recent stack test report to this application. If the Department already has a copy of the most recent stack test, please specify the date of most recent stack test.

Date of most recent stack test: _____

Control Equipment: If applicable, types of air pollution control equipment (Examples: baghouse, cyclone, wet scrubber, electrostatic precipitator, thermal oxidizer, miscellaneous control device, etc.).

six thermal oxidizers

Please complete the appropriate air quality permit application form for each type of control equipment that controls air emissions from this operation.

Stack Information: If this application is a renewal, contact the air program. We may have this information.

X- Coordinate or Easting:		feet		meters
Y- Coordinate or Northing:		feet		meters
Base Elevation of Stack:		feet		meters
Stack Height:		feet		meters
Exit Stack Diameter		feet		meters
Exit Stack Temperature		degrees Fahrenheit		

Exit Stack Velocity and/or Flow Rate:

Velocity:		feet per second		meters per second

and/or

Flow Rate:		actual cubic feet per minute		actual cubic meters per second

Sulfur Recovery Plant exhausts to atmosphere through six thermal oxidizers.
See attached E1640V1 forms for thermal oxidizer stack data.

SD EForm - 1640 V1

Air Quality Permit Application Form

Thermal Oxidizer

This form is to be submitted, if necessary, along with the Title V (Part 70) Operating Permit, Minor Operating Permit, or the General Permits. (please complete shaded areas)

Equipment and processes served by this thermal oxidizer (please list all equipment and processes):

	Equipment and Processes
1.	Sulfur Recovery Plant
2.	
3.	
4.	

Manufacturer Information:

Manufacturer?	to be determined		
Manufacturer date?	to be determined	Installation date?	to be determined
Manufacturer's designed control efficiency?	to be determined	%	
Maximum heat input?	to be determined	million Btus per hour	
Lowest operating temperature?	to be determined	Degrees Fahrenheit	
Residence time?	to be determined	Seconds	
Type of fuel?	refinery fuel gas	Primary	
	natural gas	Secondary	

Stack Information: If this application is a renewal, contact the air program. We may have this information.

X- Coordinate or Easting:		feet	or	686,380.00	meters
Y- Coordinate or Northing:		feet	or	4,741,963.00	meters
Base Elevation of Stack:	1,220.00	feet	or		meters
Stack Height:	100.00	feet	or		meters
Exit Stack Diameter	6.00	feet	or		meters
Exit Stack Temperature	525.00	degrees Fahrenheit			

Exit Stack Velocity and/or Flow Rate:

Velocity:	23.40	feet per second		meters per second
		and/or		
Flow Rate:		actual cubic feet per minute		actual cubic meters per second

Air Quality Permit Application Form

Thermal Oxidizer

This form is to be submitted, if necessary, along with the Title V (Part 70) Operating Permit, Minor Operating Permit, or the General Permits. (please complete shaded areas)

Equipment and processes served by this thermal oxidizer (please list all equipment and processes):

	Equipment and Processes
1.	Sulfur Recovery Plant
2.	
3.	
4.	

Manufacturer Information:

Manufacturer?	to be determined		
Manufacturer date?	to be determined	Installation date?	to be determined
Manufacturer's designed control efficiency?	to be determined	%	
Maximum heat input?	to be determined	million Btus per hour	
Lowest operating temperature?	to be determined	Degrees Fahrenheit	
Residence time?	to be determined	Seconds	
Type of fuel?	refinery fuel gas	Primary	
	natural gas	Secondary	

Stack Information: If this application is a renewal, contact the air program. We may have this information.

X- Coordinate or Easting:		feet	or	686,423.31	meters
Y- Coordinate or Northing:		feet	or	4,741,963.00	meters
Base Elevation of Stack:	1,220.00	feet	or		meters
Stack Height:	100.00	feet	or		meters
Exit Stack Diameter	6.00	feet	or		meters
Exit Stack Temperature	525.00	degrees Fahrenheit			

Exit Stack Velocity and/or Flow Rate:

Velocity:	23.40	feet per second		meters per second
		and/or		
Flow Rate:		actual cubic feet per minute		actual cubic meters per second

SD EForm - 1640 V1

Air Quality Permit Application Form

Thermal Oxidizer

This form is to be submitted, if necessary, along with the Title V (Part 70) Operating Permit, Minor Operating Permit, or the General Permits. (please complete shaded areas)

Equipment and processes served by this thermal oxidizer (please list all equipment and processes):

	Equipment and Processes
1.	Sulfur Recovery Plant
2.	
3.	
4.	

Manufacturer Information:

Manufacturer?	to be determined		
Manufacturer date?	to be determined	Installation date?	to be determined
Manufacturer's designed control efficiency?	to be determined	%	
Maximum heat input?	to be determined	million Btus per hour	
Lowest operating temperature?	to be determined	Degrees Fahrenheit	
Residence time?	to be determined	Seconds	
Type of fuel?	refinery fuel gas	Primary	
	natural gas	Secondary	

Stack Information: If this application is a renewal, contact the air program. We may have this information.

X- Coordinate or Easting:		feet	or	686,461.13	meters
Y- Coordinate or Northing:		feet	or	4,741,963.00	meters
Base Elevation of Stack:	1,220.00	feet	or		meters
Stack Height:	100.00	feet	or		meters
Exit Stack Diameter	6.00	feet	or		meters
Exit Stack Temperature	525.00	degrees Fahrenheit			

Exit Stack Velocity and/or Flow Rate:

Velocity:	23.40	feet per second		meters per second
		and/or		
Flow Rate:		actual cubic feet per minute		actual cubic meters per second

SD EForm - 1640 V1

Air Quality Permit Application Form

Thermal Oxidizer

This form is to be submitted, if necessary, along with the Title V (Part 70) Operating Permit, Minor Operating Permit, or the General Permits. (please complete shaded areas)

Equipment and processes served by this thermal oxidizer (please list all equipment and processes):

	Equipment and Processes
1.	Sulfur Recovery Plant
2.	
3.	
4.	

Manufacturer Information:

Manufacturer?	to be determined		
Manufacturer date?	to be determined	Installation date?	to be determined
Manufacturer's designed control efficiency?	to be determined	%	
Maximum heat input?	to be determined	million Btus per hour	
Lowest operating temperature?	to be determined	Degrees Fahrenheit	
Residence time?	to be determined	Seconds	
Type of fuel?	refinery fuel gas	Primary	
	natural gas	Secondary	

Stack Information: If this application is a renewal, contact the air program. We may have this information.

X- Coordinate or Easting:		feet	or	686,506.94	meters
Y- Coordinate or Northing:		feet	or	4,741,963.00	meters
Base Elevation of Stack:	1,220.00	feet	or		meters
Stack Height:	100.00	feet	or		meters
Exit Stack Diameter	6.00	feet	or		meters
Exit Stack Temperature	525.00	degrees Fahrenheit			

Exit Stack Velocity and/or Flow Rate:

Velocity:	23.40	feet per second		meters per second
		and/or		
Flow Rate:		actual cubic feet per minute		actual cubic meters per second

SD EForm - 1640 V1

Air Quality Permit Application Form

Thermal Oxidizer

This form is to be submitted, if necessary, along with the Title V (Part 70) Operating Permit, Minor Operating Permit, or the General Permits. (please complete shaded areas)

Equipment and processes served by this thermal oxidizer (please list all equipment and processes):

	Equipment and Processes
1.	Sulfur Recovery Plant
2.	
3.	
4.	

Manufacturer Information:

Manufacturer?	to be determined		
Manufacturer date?	to be determined	Installation date?	to be determined
Manufacturer's designed control efficiency?	to be determined	%	
Maximum heat input?	to be determined	million Btus per hour	
Lowest operating temperature?	to be determined	Degrees Fahrenheit	
Residence time?	to be determined	Seconds	
Type of fuel?	refinery fuel gas	Primary	
	natural gas	Secondary	

Stack Information: If this application is a renewal, contact the air program. We may have this information.

X- Coordinate or Easting:		feet	or	686,543.81	meters
Y- Coordinate or Northing:		feet	or	4,741,963.00	meters
Base Elevation of Stack:	1,220.00	feet	or		meters
Stack Height:	100.00	feet	or		meters
Exit Stack Diameter	6.00	feet	or		meters
Exit Stack Temperature	525.00	degrees Fahrenheit			

Exit Stack Velocity and/or Flow Rate:

Velocity:	23.40	feet per second		meters per second

and/or

Flow Rate:		actual cubic feet per minute		actual cubic meters per second

Air Quality Permit Application Form

Thermal Oxidizer

This form is to be submitted, if necessary, along with the Title V (Part 70) Operating Permit, Minor Operating Permit, or the General Permits. (please complete shaded areas)

Equipment and processes served by this thermal oxidizer (please list all equipment and processes):

	Equipment and Processes
1.	Sulfur Recovery Plant
2.	
3.	
4.	

Manufacturer Information:

Manufacturer?	to be determined		
Manufacturer date?	to be determined	Installation date?	to be determined
Manufacturer's designed control efficiency?	to be determined	%	
Maximum heat input?	to be determined	million Btus per hour	
Lowest operating temperature?	to be determined	Degrees Fahrenheit	
Residence time?	to be determined	Seconds	
Type of fuel?	refinery fuel gas	Primary	
	natural gas	Secondary	

Stack Information: If this application is a renewal, contact the air program. We may have this information.

X- Coordinate or Easting:		feet	or	686,582.00	meters
Y- Coordinate or Northing:		feet	or	4,741,963.00	meters
Base Elevation of Stack:	1,220.00	feet	or		meters
Stack Height:	100.00	feet	or		meters
Exit Stack Diameter	6.00	feet	or		meters
Exit Stack Temperature	525.00	degrees Fahrenheit			

Exit Stack Velocity and/or Flow Rate:

Velocity:	23.40	feet per second		meters per second
		and/or		
Flow Rate:		actual cubic feet per minute		actual cubic meters per second

South Dakota Department of Environment & Natural Resources
Protecting SD's Tomorrow...Today

Air Quality Permit Application Form

Storage Tanks

This form is to be submitted, if necessary, along with the Title V (Part 70) Operating Permit or Minor Operating Permit.
(please complete shaded areas)

1. Facility identification (i.e., Tank #1, Unit #1, etc)? see attached Table A-1635
2. Manufacturer? to be determined
3. Construction date? to be determined 4. Model number? to be determined
5. Check appropriate box: ☑ Aboveground ☐ Underground
6. Maximum designed storage capacity? see attached Table A-1635 gallons
7. Check the appropriate box for the type of liquid stored in the storage tank:

☐ Distillate oil ☐ Residual oil
☐ Ethanol ☐ JP8 Jet Fuel
☐ Other (please specify) see attached Table A-1635

8. Maximum true vapor pressure of liquid?

		millimeters mercury
or	see attached Table A-1635	pounds per square inch absolute
or		kilo Pascal

9. Have plans and specifications been submitted to the Department? ☐ Yes ☑ No

If no, please attach a copy of the plans and design specifications to the application.

10. If applicable, types of air pollution control equipment (i.e., wet scrubber, thermal oxidizer, etc.):

see attached Table A-1635

Please complete the appropriate air quality permit application form for each type of control equipment that controls air emissions from this operation.

Table A-1635

Tank ID Number	Manufacturer	Construction Date	Model Number	Above or Under Ground	Max. Design Storage Capacity (gallons)	Liquid Stored	Max. True Vapor Pressure of Liquid	VP Units	Plans and Specs Submitted	Plans and Specs Attached	Control Device Type
RF1-1		2008		A	21,000,000	Crude Oil	6	psia			Internal Floating Roof
RF1-2		2008		A	21,000,000	Crude Oil	6	psia			Internal Floating Roof
RF1-3		2008		A	21,000,000	Crude Oil	6	psia			Internal Floating Roof
RF1-4		2008		A	21,000,000	Crude Oil	6	psia			Internal Floating Roof
RF1-5		2008		A	21,000,000	Crude Oil	6	psia			Internal Floating Roof
RF1-6		2008		A	21,000,000	Crude Oil	6	psia			Internal Floating Roof
RF1-7		2008		A	21,000,000	Crude Oil	6	psia			Internal Floating Roof
RF1-8		2008		A	21,000,000	Crude Oil	6	psia			Internal Floating Roof
RF1-9		2008		A	21,000,000	Crude Oil	6	psia			Internal Floating Roof
RF1-10		2008		A	21,000,000	Crude Oil	6	psia			Internal Floating Roof
RP4-1		2008		A	8,400,000	Conventional Regular Gasoline	11	psia			Internal Floating Roof
RP4-2		2008		A	8,400,000	Conventional Regular Gasoline	11	psia			Internal Floating Roof
RP5-1		2008		A	8,400,000	Conventional Premium Gasoline	11	psia			Internal Floating Roof
RP6-1		2008		A	8,400,000	Conventional Regular Subgrade Gasoline	11	psia			Internal Floating Roof
RP6-2		2008		A	8,400,000	Conventional Regular Subgrade Gasoline	11	psia			Internal Floating Roof
RP6-3		2008		A	8,400,000	Conventional Regular Subgrade Gasoline	11	psia			Internal Floating Roof
RP6-4		2008		A	8,400,000	Conventional Regular Subgrade Gasoline	11	psia			Internal Floating Roof
RP6-5		2008		A	8,400,000	Conventional Regular Subgrade Gasoline	11	psia			Internal Floating Roof
RP6-6		2008		A	8,400,000	Conventional Regular Subgrade Gasoline	11	psia			Internal Floating Roof
RP6-7		2008		A	8,400,000	Conventional Regular Subgrade Gasoline	11	psia			Internal Floating Roof
RP7-1		2008		A	8,400,000	Conventional Premium Subgrade Gasoline	11	psia			Internal Floating Roof
RP8-1		2008		A	8,400,000	RBOB Regular Gasoline	11	psia			Internal Floating Roof
RP8-2		2008		A	8,400,000	RBOB Regular Gasoline	11	psia			Internal Floating Roof
RP8-3		2008		A	8,400,000	RBOB Regular Gasoline	11	psia			Internal Floating Roof
RP8-4		2008		A	8,400,000	RBOB Regular Gasoline	11	psia			Internal Floating Roof
RP9-1		2008		A	8,400,000	RBOB Premium Gasoline	11	psia			Internal Floating Roof
RP10-1		2008		A	8,400,000	Jet Fuel (HC Kerosene)	0.006	psia			Internal Floating Roof
RP10-2		2008		A	8,400,000	Jet Fuel (HC Kerosene)	0.006	psia			Internal Floating Roof
RP10-3		2008		A	8,400,000	Jet Fuel (HC Kerosene)	0.006	psia			Internal Floating Roof
RP11-1		2008		A	8,400,000	ULSD Diesel Product	0.005	psia			Internal Floating Roof
RP11-2		2008		A	8,400,000	ULSD Diesel Product	0.005	psia			Internal Floating Roof
RP11-3		2008		A	8,400,000	ULSD Diesel Product	0.005	psia			Internal Floating Roof
RP11-4		2008		A	8,400,000	ULSD Diesel Product	0.005	psia			Internal Floating Roof
RP11-5		2008		A	8,400,000	ULSD Diesel Product	0.005	psia			Internal Floating Roof
RP11-6		2008		A	8,400,000	ULSD Diesel Product	0.005	psia			Internal Floating Roof
RP11-7		2008		A	8,400,000	ULSD Diesel Product	0.005	psia			Internal Floating Roof
RP11-8		2008		A	8,400,000	ULSD Diesel Product	0.005	psia			Internal Floating Roof
RP11-9		2008		A	8,400,000	ULSD Diesel Product	0.005	psia			Internal Floating Roof
RP11-10		2008		A	8,400,000	ULSD Diesel Product	0.005	psia			Internal Floating Roof
RP11-11		2008		A	8,400,000	ULSD Diesel Product	0.005	psia			Internal Floating Roof
IP3-1		2008		A	10,500,000	LSR from Crude Unit	5.2	psia			Internal Floating Roof
IP3-2		2008		A	10,500,000	LSR from Crude Unit	5.2	psia			Internal Floating Roof
IP4-1		2008		A	8,400,000	Coker Naphtha	3	psia			Internal Floating Roof
IP5-1		2008		A	6,300,000	Hydrotreated Light Nap (HT LN) (Penex Feed)	11	psia			Internal Floating Roof
IP5-2		2008		A	6,300,000	Hydrotreated Light Nap (HT LN) (Penex Feed)	11	psia			Internal Floating Roof
IP6-1		2008		A	8,400,000	Hydrotreated Heavy Nap (HT HN) (Blendstock+ CCR Feed)	3	psia			Internal Floating Roof
IP6-2		2008		A	8,400,000	Hydrotreated Heavy Nap (HT HN) (Blendstock+ CCR Feed)	3	psia			Internal Floating Roof
IP7-1		2008		A	14,000,000	HCHN (to reformers)	1	psia			Internal Floating Roof
IP7-2		2008		A	14,000,000	HCHN (to reformers)	1	psia			Internal Floating Roof
IP8-1		2008		A	6,300,000	HCLN (Total Bensat Feed+Blend Component)	1	psia			Internal Floating Roof
IP8-2		2008		A	6,300,000	HCLN (Total Bensat Feed+Blend Component)	1	psia			Internal Floating Roof
IP9-1		2008		A	4,200,000	Light Reformate (Alternate Bensat Feed)	1	psia			Internal Floating Roof
IP10-1		2008		A	2,100,000	Saturated HCLN (Bensat product)	1	psia			Internal Floating Roof
IP10-2		2008		A	2,100,000	Saturated HCLN (Bensat product)	1	psia			Internal Floating Roof
IP11-1		2008		A	8,400,000	Reformate	3	psia			Internal Floating Roof
IP11-2		2008		A	8,400,000	Reformate	3	psia			Internal Floating Roof
IP11-3		2008		A	8,400,000	Reformate	3	psia			Internal Floating Roof

Table A-1635

Tank ID Number	Manufacturer	Construction Date	Model Number	Above or Under Ground	Max. Design Storage Capacity (gallons)	Liquid Stored	Max. True Vapor Pressure of Liquid	VP Units	Plans and Specs Submitted	Plans and Specs Attached	Control Device Type
IP11-4		2008		A	8,400,000	Reformate	1	psia			Internal Floating Roof
IP12-1		2008		A	8,400,000	Heavy Reformate	1	psia			Internal Floating Roof
IP13-1		2008		A	6,300,000	Isomerate	8	psia			Internal Floating Roof
IP13-2		2008		A	6,300,000	Isomerate	8	psia			Internal Floating Roof
IP14-1		2008		A	2,500,000	Inalk Alkylate	0.4	psia			Internal Floating Roof
IP14-2		2008		A	2,500,000	Inalk Alkylate	0.4	psia			Internal Floating Roof
IP15-1		2008		A	450,000	Inalk C12+ Stream	0.01	psia			Internal Floating Roof
IP16-1		2008		A	4,200,000	Straight Run Kerosene	0.01	psia			Internal Floating Roof
IP16-2		2008		A	4,200,000	Straight Run Kerosene	0.01	psia			Internal Floating Roof
IP17-1		2008		A	4,200,000	Straight Run Diesel	0.005	psia			Internal Floating Roof
IP17-2		2008		A	4,200,000	Straight Run Diesel	0.005	psia			Internal Floating Roof
IP17-3		2008		A	4,200,000	Straight Run Diesel	0.005	psia			Internal Floating Roof
IP18-1		2008		A	4,200,000	AGO	0.015	psia			n/a
IP19-1		2008		A	4,200,000	Coker LCGO	0.004	psia			Internal Floating Roof
IP19-2		2008		A	4,200,000	Coker LCGO	0.004	psia			Internal Floating Roof
IP20-1		2008		A	8,400,000	DHDS ULSD Product	0.005	psia			Internal Floating Roof
IP20-2		2008		A	8,400,000	DHDS ULSD Product	0.005	psia			Internal Floating Roof
IP20-3		2008		A	8,400,000	DHDS ULSD Product	0.005	psia			Internal Floating Roof
IP21-1		2008		A	2,100,000	DHDS Naphtha Product	1	psia			Internal Floating Roof
IP22-1		2008		A	8,400,000	Hydrocracker Diesel	0.005	psia			Internal Floating Roof
IP22-2		2008		A	8,400,000	Hydrocracker Diesel	0.005	psia			Internal Floating Roof
IP23-1		2008		A	14,000,000	VGO	0.015	psia			n/a
IP23-2		2008		A	14,000,000	VGO	0.015	psia			n/a
IP23-3		2008		A	14,000,000	VGO	0.015	psia			n/a
IP24-1		2008		A	4,200,000	Coker HCGO	0.009	psia			n/a
IP24-2		2008		A	4,200,000	Coker HCGO	0.009	psia			n/a
IP25-1		2008		A	21,000,000	VR (Coker Charge)	0.04	psia			n/a
IP25-2		2008		A	21,000,000	VR (Coker Charge)	0.04	psia			n/a
IP26-1		2008		A	150,000	Ethanol	0.5	psia			Internal Floating Roof
IP26-2		2008		A	150,000	Ethanol	0.5	psia			Internal Floating Roof
SS1-1		2008		A	3,400,000	Slop	2.4	psia			Internal Floating Roof
SS1-2		2008		A	3,400,000	Slop	2.4	psia			Internal Floating Roof
SS2-1		2008		A	6,300,000	Sour Water - Coker/Crude/Vac	3.3	psia			Internal Floating Roof
SS3-1		2008		A	6,300,000	Sour Water - HC/HDS	3.3	psia			Internal Floating Roof
SS4-1		2008		A	6,300,000	Sour Water - Swing	3.3	psia			Internal Floating Roof
SS8-1		2008		A	6,300,000	Amine (Lean)	0.017	psia			n/a
SS9-1		2008		A	6,300,000	Amine (Rich)	0.0014	psia			Internal Floating Roof
SS10-1		2008		A	6,300,000	Amine Swing Tank (Either Sour or Sweet)	0.0014	psia			Internal Floating Roof
SS14-1		2008		A	150,000	Gasoline Product with Additives	3.3	psia			Internal Floating Roof
SS15-1		2008		A	150,000	Gasoline Product with Additives	3.3	psia			Internal Floating Roof
SS16-1		2008		A	150,000	Gasoline Product with Additives	3.3	psia			Internal Floating Roof
SS17-1		2008		A	150,000	Gasoline Product with Additives	3.3	psia			Internal Floating Roof
SS18-1		2008		A	150,000	Gasoline Product with Additives	3.3	psia			Internal Floating Roof
SS19-1		2008		A	150,000	Gasoline Product with Additives	3.3	psia			Internal Floating Roof
SS20-1		2008		A	150,000	Kerosene Product (with Additives)	0.0061	psia			Internal Floating Roof
SS21-1		2008		A	140,000	Diesel Product (with Additives)	0.0045	psia			Internal Floating Roof
SS22-1		2008		A	31,000	Methanol	1.1	psia			Internal Floating Roof

South Dakota Department of Environment & Natural Resources
Protecting SD's Tomorrow...Today

Air Quality Permit Application Form

Miscellaneous Process

This form is to be submitted, if necessary, along with the Title V (Part 70) Operating Permit or Minor Operating Permit.

(please complete shaded areas)

1. Facility identification (i.e., Boiler #1, Unit #1, etc): Railcar Loading Rack
2. Manufacturer: to be determined Manufacture date: tbd
3. Model number: to be determined
4. Type (i.e., steam boiler, simple cycle combustion turbine, generator, etc.)

n/a

5. Maximum designed operating rate (name plate):

16,000 barrels per day

or _____ horsepower

or _____ kilowatts

6. Check the appropriate box(es) for primary and secondary fuels:

☐ Natural gas ☐ Propane

☐ Distillate oil Sulfur content _____ Weight percent

☐ Residual oil Sulfur content _____ Weight percent

☐ Bituminous Coal ☐ Subbituminous Coal ☐ Lignite Coal

Coal sulfur content _____ Weight percent Coal ash content _____ Weight percent

☐ Other (please specify) n/a

7. Has a stack test been conducted (check appropriate box)? ☐ Yes ☑ No

If a stack test has been conducted, please attach a copy of the most recent stack test report to this application. If the Department already has a copy of the most recent stack test, please specify the date of most recent stack test.

Date of most recent stack test: _____

Control Equipment: If applicable, types of air pollution control equipment (Examples: baghouse, cyclone, wet scrubber, electrostatic precipitator, thermal oxidizer, miscellaneous control device, etc.).

vapor recovery unit

Please complete the appropriate air quality permit application form for each type of control equipment that controls air emissions from this operation.

Stack Information: If this application is a renewal, contact the air program. We may have this information.

X- Coordinate or Easting:		feet		meters
Y- Coordinate or Northing:		feet		meters
Base Elevation of Stack:		feet		meters
Stack Height:		feet		meters
Exit Stack Diameter		feet		meters
Exit Stack Temperature		degrees Fahrenheit		

Exit Stack Velocity and/or Flow Rate:

Velocity:		feet per second		meters per second

and/or

Flow Rate:		actual cubic feet per minute		actual cubic meters per second

Railcar loading rack exhausts to atmosphere through vapor recovery unit. See attached E1639V1 form for vapor recovery unit stack parameters.

Air Quality Permit Application Form

Miscellaneous Control Device

This form is to be submitted, if necessary, along with the Title V (Part 70) Operating Permit, Minor Operating Permit, or the General Permits.

(please complete shaded areas)

Describe the miscellaneous control device and how it works:

The system includes parallel adsorber vessels alternating between adsorption and regeneration modes. VOC containing gases displaced during loading pass through the adsorber vessel in the adsorption mode, while the other vessel is off-stream in the regeneration mode.

Equipment and processes served by this baghouse (please list all equipment and processes):

	Equipment and Processes
1.	Railcar Loading Rack
2.	
3.	
4.	
5.	

Manufacturer Information:

Manufacturer?	to be determined (tbd)		
Manufacturer date?	tbd	Installation date?	tbd
Manufacturer's designed control efficiency?	tbd	%	

Miscellaneous Control Device Operation and Maintenance:

Pressure drop across control unit?	n/a	Inches water (minimum)	n/a	inches water (maximum)
Inlet Temperature?	tbd	Fahrenheit (minimum)	tbd	Fahrenheit (maximum)
Outlet Temperature?	n/a	Fahrenheit (minimum)	n/a	Fahrenheit (maximum)

Describe maintenance of control unit (use of visual inspections, maintenance schedule, etc.):

to be determined

Stack Information: If this application is a renewal, contact the air program. We may have this information.

X- Coordinate or Easting: [1]		feet	or	686,636.00	meters
Y- Coordinate or Northing: [1]		feet	or	4,741,509.00	meters
Base Elevation of Stack: [1]	1,220.00	feet	or		meters
Stack Height:	30.00	feet	or		meters
Exit Stack Diameter	0.50	feet	or		meters
Exit Stack Temperature	ambient	degrees Fahrenheit			

Exit Stack Velocity and/or Flow Rate:

Velocity:	20.00	feet per second		meters per second

and/or

Flow Rate:		actual cubic feet per minute		actual cubic meters per second

[1] - Portable asphalt plants, rock crushers, or concrete plants do not have to provide the requested information in these categories.

South Dakota Department of Environment & Natural Resources
Protecting SD's Tomorrow...Today

Air Quality Permit Application Form

Miscellaneous Process

This form is to be submitted, if necessary, along with the Title V (Part 70) Operating Permit or Minor Operating Permit.

(please complete shaded areas)

1. Facility identification (i.e., Boiler #1, Unit #1, etc): Truck Loading Rack
2. Manufacturer: to be determined Manufacture date: tbd
3. Model number: to be determined
4. Type (i.e., steam boiler, simple cycle combustion turbine, generator, etc.)

n/a

5. Maximum designed operating rate (name plate):

16,000 barrels per day

or _____ horsepower

or _____ kilowatts

6. Check the appropriate box(es) for primary and secondary fuels:

☐ Natural gas ☐ Propane

☐ Distillate oil Sulfur content _____ Weight percent

☐ Residual oil Sulfur content _____ Weight percent

☐ Bituminous Coal ☐ Subbituminous Coal ☐ Lignite Coal

Coal sulfur content _____ Weight percent Coal ash content _____ Weight percent

☐ Other (please specify) n/a

7. Has a stack test been conducted (check appropriate box)? ☐ Yes ☑ No

If a stack test has been conducted, please attach a copy of the most recent stack test report to this application. If the Department already has a copy of the most recent stack test, please specify the date of most recent stack test.

Date of most recent stack test: _____

Control Equipment: If applicable, types of air pollution control equipment (Examples: baghouse, cyclone, wet scrubber, electrostatic precipitator, thermal oxidizer, miscellaneous control device, etc.).

vapor recovery unit

Please complete the appropriate air quality permit application form for each type of control equipment that controls air emissions from this operation.

Stack Information: If this application is a renewal, contact the air program. We may have this information.

X- Coordinate or Easting:		feet		meters
Y- Coordinate or Northing:		feet		meters
Base Elevation of Stack:		feet		meters
Stack Height:		feet		meters
Exit Stack Diameter		feet		meters
Exit Stack Temperature		degrees Fahrenheit		

Exit Stack Velocity and/or Flow Rate:

Velocity: _____ feet per second _____ meters per second

and/or

Flow Rate: _____ actual cubic feet per minute _____ actual cubic meters per second

Truck loading rack exhausts to atmosphere through vapor recovery unit. See attached E1639V1 form for vapor recovery unit stack parameters.

Air Quality Permit Application Form

Miscellaneous Control Device

This form is to be submitted, if necessary, along with the Title V (Part 70) Operating Permit, Minor Operating Permit, or the General Permits.

(please complete shaded areas)

Describe the miscellaneous control device and how it works:

The system includes parallel adsorber vessels alternating between adsorption and regeneration modes. VOC containing gases displaced during loading pass through the adsorber vessel in the adsorption mode, while the other vessel is off-stream in the regeneration mode.

Equipment and processes served by this baghouse (please list all equipment and processes):

	Equipment and Processes
1.	Truck Loading Rack
2.	
3.	
4.	
5.	

Manufacturer Information:

Manufacturer?	to be determined (tbd)		
Manufacturer date?	tbd	Installation date?	tbd
Manufacturer's designed control efficiency?	tbd	%	

Miscellaneous Control Device Operation and Maintenance:

Pressure drop across control unit?	n/a	Inches water (minimum)	n/a	inches water (maximum)
Inlet Temperature?	tbd	Fahrenheit (minimum)	tbd	Fahrenheit (maximum)
Outlet Temperature?	n/a	Fahrenheit (minimum)	n/a	Fahrenheit (maximum)

Describe maintenance of control unit (use of visual inspections, maintenance schedule, etc.):

to be determined

Stack Information: If this application is a renewal, contact the air program. We may have this information.

X- Coordinate or Easting: [1]		feet	or	687,674.00	meters
Y- Coordinate or Northing: [1]		feet	or	4,741,509.00	meters
Base Elevation of Stack: [1]	1,220.00	feet	or		meters
Stack Height:	30.00	feet	or		meters
Exit Stack Diameter	0.50	feet	or		meters
Exit Stack Temperature	ambient	degrees Fahrenheit			

Exit Stack Velocity and/or Flow Rate:

Velocity:	20.00	feet per second		meters per second

and/or

Flow Rate:		actual cubic feet per minute		actual cubic meters per second

[1] - Portable asphalt plants, rock crushers, or concrete plants do not have to provide the requested information in these categories.

South Dakota Department of Environment & Natural Resources
Protecting SD's Tomorrow...Today

Air Quality Permit Application Form

Miscellaneous Process

This form is to be submitted, if necessary, along with the Title V (Part 70) Operating Permit or Minor Operating Permit.
(please complete shaded areas)

1. Facility identification (i.e., Boiler #1, Unit #1, etc): Wastewater Treatment Plant
2. Manufacturer: to be determined Manufacture date: tbd
3. Model number: to be determined
4. Type (i.e., steam boiler, simple cycle combustion turbine, generator, etc.)

API Separators and Primary DAF Units

5. Maximum designed operating rate (name plate):

n/a
or horsepower
or kilowatts

6. Check the appropriate box(es) for primary and secondary fuels:

☐ Natural gas ☐ Propane
☐ Distillate oil Sulfur content Weight percent
☐ Residual oil Sulfur content Weight percent
☐ Bituminous Coal ☐ Subbituminous Coal ☐ Lignite Coal
Coal sulfur content Weight percent Coal ash content Weight percent
☐ Other (please specify) n/a

7. Has a stack test been conducted (check appropriate box)? ☐ Yes ☑ No

If a stack test has been conducted, please attach a copy of the most recent stack test report to this application. If the Department already has a copy of the most recent stack test, please specify the date of most recent stack test.

Date of most recent stack test:

Control Equipment: If applicable, types of air pollution control equipment (Examples: baghouse, cyclone, wet scrubber, electrostatic precipitator, thermal oxidizer, miscellaneous control device, etc.).

thermal oxidizer

Please complete the appropriate air quality permit application form for each type of control equipment that controls air emissions from this operation.

Stack Information: If this application is a renewal, contact the air program. We may have this information.

X- Coordinate or Easting:		feet		meters
Y- Coordinate or Northing:		feet		meters
Base Elevation of Stack:		feet		meters
Stack Height:		feet		meters
Exit Stack Diameter		feet		meters
Exit Stack Temperature		degrees Fahrenheit		

Exit Stack Velocity and/or Flow Rate:

Velocity: _____ feet per second _____ meters per second

and/or

Flow Rate: _____ actual cubic feet per minute _____ actual cubic meters per second

Wastewater treatment plant exhausts to atmosphere through thermal oxidizer.
See attached E1640V1 form for thermal oxidizer stack parameters.

Air Quality Permit Application Form

Thermal Oxidizer

This form is to be submitted, if necessary, along with the Title V (Part 70) Operating Permit, Minor Operating Permit, or the General Permits. (please complete shaded areas)

Equipment and processes served by this thermal oxidizer (please list all equipment and processes):

	Equipment and Processes
1.	Wastewater Treatment Plant
2.	
3.	
4.	

Manufacturer Information:

Manufacturer?	to be determined		
Manufacturer date?	to be determined	Installation date?	to be determined
Manufacturer's designed control efficiency?	to be determined	%	
Maximum heat input?	to be determined	million Btus per hour	
Lowest operating temperature?	to be determined	Degrees Fahrenheit	
Residence time?	to be determined	Seconds	
Type of fuel?	refinery fuel gas	Primary	
	natural gas	Secondary	

Stack Information: If this application is a renewal, contact the air program. We may have this information.

X- Coordinate or Easting:		feet	or	687,062.56	meters
Y- Coordinate or Northing:		feet	or	4,742,137.00	meters
Base Elevation of Stack:	1,220.00	feet	or		meters
Stack Height:	50.00	feet	or		meters
Exit Stack Diameter	0.30	feet	or		meters
Exit Stack Temperature	500.00	degrees Fahrenheit			

Exit Stack Velocity and/or Flow Rate:

Velocity:	53.70	feet per second		meters per second

and/or

Flow Rate:		actual cubic feet per minute		actual cubic meters per second

SD EForm - 1639 V1

Air Quality Permit Application Form

Miscellaneous Control Device

This form is to be submitted, if necessary, along with the Title V (Part 70) Operating Permit, Minor Operating Permit, or the General Permits.

(please complete shaded areas)

Describe the miscellaneous control device and how it works:

Ammonia is injected into the flue gas upstream of a catalytic reactor, where the catalyst promotes a reduction reaction that converts NOx to molecular nitrogen.

Equipment and processes served by this baghouse (please list all equipment and processes):

	Equipment and Processes
1.	Wastewater Treatment Plant (with Thermal Oxidizer)
2.	
3.	
4.	
5.	

Manufacturer Information:

Manufacturer?	to be determined (tbd)		
Manufacturer date?	tbd	Installation date?	tbd
Manufacturer's designed control efficiency?	tbd	%	

Miscellaneous Control Device Operation and Maintenance:

Pressure drop across control unit?	n/a	Inches water (minimum)	n/a	inches water (maximum)
Inlet Temperature?	tbd	Fahrenheit (minimum)	tbd	Fahrenheit (maximum)
Outlet Temperature?	n/a	Fahrenheit (minimum)	n/a	Fahrenheit (maximum)

Describe maintenance of control unit (use of visual inspections, maintenance schedule, etc.):

to be determined

Stack Information: If this application is a renewal, contact the air program. We may have this information.

X- Coordinate or Easting: [1]		feet	or	687,062.56	meters
Y- Coordinate or Northing: [1]		feet	or	4,742,137.00	meters
Base Elevation of Stack: [1]	1,220.00	feet	or		meters
Stack Height:	50.00	feet	or		meters
Exit Stack Diameter	0.30	feet	or		meters
Exit Stack Temperature	500.00	degrees Fahrenheit			

Exit Stack Velocity and/or Flow Rate:

Velocity:	53.70	feet per second		meters per second

and/or

Flow Rate:		actual cubic feet per minute		actual cubic meters per second

[1] - Portable asphalt plants, rock crushers, or concrete plants do not have to provide the requested information in these categories.

South Dakota Department of Environment & Natural Resources
Protecting SD's Tomorrow...Today

Air Quality Permit Application Form

Miscellaneous Process

This form is to be submitted, if necessary, along with the Title V (Part 70) Operating Permit or Minor Operating Permit.
(please complete shaded areas)

1. Facility identification (i.e., Boiler #1, Unit #1, etc): Petroleum Coke Storage Building
2. Manufacturer: to be determined | Manufacture date: tbd
3. Model number: to be determined
4. Type (i.e., steam boiler, simple cycle combustion turbine, generator, etc.)

n/a

5. Maximum designed operating rate (name plate):

n/a
or _____ horsepower
or _____ kilowatts

6. Check the appropriate box(es) for primary and secondary fuels:

☐ Natural gas ☐ Propane
☐ Distillate oil Sulfur content _____ Weight percent
☐ Residual oil Sulfur content _____ Weight percent
☐ Bituminous Coal ☐ Subbituminous Coal ☐ Lignite Coal
Coal sulfur content _____ Weight percent Coal ash content _____ Weight percent
☐ Other (please specify) n/a

7. Has a stack test been conducted (check appropriate box)? ☐ Yes ☑ No

If a stack test has been conducted, please attach a copy of the most recent stack test report to this application. If the Department already has a copy of the most recent stack test, please specify the date of most recent stack test.

Date of most recent stack test: _____

Control Equipment: If applicable, types of air pollution control equipment (Examples: baghouse, cyclone, wet scrubber, electrostatic precipitator, thermal oxidizer, miscellaneous control device, etc.).

four fabric filters

Please complete the appropriate air quality permit application form for each type of control equipment that controls air emissions from this operation.

Stack Information: If this application is a renewal, contact the air program. We may have this information.

X- Coordinate or Easting:		feet		meters
Y- Coordinate or Northing:		feet		meters
Base Elevation of Stack:		feet		meters
Stack Height:		feet		meters
Exit Stack Diameter		feet		meters
Exit Stack Temperature		degrees Fahrenheit		

Exit Stack Velocity and/or Flow Rate:

Velocity: _____ feet per second _____ meters per second

and/or

Flow Rate: _____ actual cubic feet per minute _____ actual cubic meters per second

Petroleum Coke Storage Building exhausts to atmosphere through four fabric filters. See attached E1636V1 forms for fabric filter stack parameters.

South Dakota Department of Environment & Natural Resources
Protecting SD's Tomorrow...Today

Air Quality Permit Application

Baghouse

This form is to be submitted, if necessary, along with the Title V (Part 70) Operating Permit, Minor Operating Permit, or the General Permits.

(please complete shaded areas)

Equipment and processes served by this baghouse (please list all equipment and processes):

Equipment and Processes

1.	Petroleum Coke Storage Building
2.	
3.	
4.	
5.	

Manufacturer Information:

Manufacturer?	to be determined		
Manufacturer date?	to be determined	Installation date?	to be determined
Manufacturer's designed control efficiency?	to be determined	%	

Type of baghouse (please check one)?

☐	Reverse Air	☐	Pulse Jet	☐	Shaker	☐	Other (specify) to be determined

Type of bags?	to be determined		
Number of bags?		Air/cloth ratio?	

Baghouse Operation and Maintenance:

Pressure drop across baghouse?	tbd	inches water (minimum)	tbd	inches water (maximum)
Inlet Temperature?	tbd	Fahrenheit (minimum)	tbd	Fahrenheit (maximum)
Outlet Temperature?	tbd	Fahrenheit (minimum)	tbd	Fahrenheit (maximum)

Describe maintenance of baghouse (use of dye test, visual inspections, changing bag frequency, etc.):

to be determined

Stack Information: If this application is a renewal, contact the air program. We may have this information.

X- Coordinate or Easting: [1]		feet	or	686,560.88	meters
Y- Coordinate or Northing: [1]		feet	or	4,741,874.00	meters
Base Elevation of Stack: [1]	1,220.00	feet	or		meters
Stack Height:	115.00	feet	or		meters
Exit Stack Diameter	5.00	feet	or		meters
Exit Stack Temperature	100.00	degrees Fahrenheit			

Exit Stack Velocity and/or Flow Rate:

Velocity:	50.96	feet per second		meters per second

and/or

Flow Rate:		actual cubic feet per minute		actual cubic meters per second

[1] - Portable asphalt plants, rock crushers, or concrete plants do not have to provide the requested information in these categories.

South Dakota Department of Environment & Natural Resources
Protecting SD's Tomorrow...Today

Air Quality Permit Application

Baghouse

This form is to be submitted, if necessary, along with the Title V (Part 70) Operating Permit, Minor Operating Permit, or the General Permits.

(please complete shaded areas)

Equipment and processes served by this baghouse (please list all equipment and processes):

Equipment and Processes

1.	Petroleum Coke Storage Building
2.	
3.	
4.	
5.	

Manufacturer Information:

Manufacturer?	to be determined		
Manufacturer date?	to be determined	Installation date?	to be determined
Manufacturer's designed control efficiency?	to be determined	%	

Type of baghouse (please check one)?

☐	Reverse Air	☐	Pulse Jet	☐	Shaker	☐	Other (specify) to be determined

Type of bags?	to be determined		
Number of bags?		Air/cloth ratio?	

Baghouse Operation and Maintenance:

Pressure drop across baghouse?	tbd	inches water (minimum)	tbd	inches water (maximum)
Inlet Temperature?	tbd	Fahrenheit (minimum)	tbd	Fahrenheit (maximum)
Outlet Temperature?	tbd	Fahrenheit (minimum)	tbd	Fahrenheit (maximum)

Describe maintenance of baghouse (use of dye test, visual inspections, changing bag frequency, etc.):

to be determined

Stack Information: If this application is a renewal, contact the air program. We may have this information.

X- Coordinate or Easting: [1]		feet	or	686,559.88	meters
Y- Coordinate or Northing: [1]		feet	or	4,741,810.00	meters
Base Elevation of Stack: [1]	1,220.00	feet	or		meters
Stack Height:	115.00	feet	or		meters
Exit Stack Diameter	5.00	feet	or		meters
Exit Stack Temperature	100.00	degrees Fahrenheit			

Exit Stack Velocity and/or Flow Rate:

Velocity:	50.96	feet per second		meters per second

and/or

Flow Rate:		actual cubic feet per minute		actual cubic meters per second

[1] - Portable asphalt plants, rock crushers, or concrete plants do not have to provide the requested information in these categories.

South Dakota Department of Environment & Natural Resources
Protecting SD's Tomorrow...Today

Air Quality Permit Application

Baghouse

This form is to be submitted, if necessary, along with the Title V (Part 70) Operating Permit, Minor Operating Permit, or the General Permits.

(please complete shaded areas)

Equipment and processes served by this baghouse (please list all equipment and processes):

Equipment and Processes

1.	Petroleum Coke Storage Building
2.	
3.	
4.	
5.	

Manufacturer Information:

Manufacturer?	to be determined		
Manufacturer date?	to be determined	Installation date?	to be determined
Manufacturer's designed control efficiency?	to be determined	%	

Type of baghouse (please check one)?

☐	Reverse Air	☐	Pulse Jet	☐	Shaker	☐	Other (specify) to be determined

Type of bags?	to be determined		
Number of bags?		Air/cloth ratio?	

Baghouse Operation and Maintenance:

Pressure drop across baghouse?	tbd	inches water (minimum)	tbd	inches water (maximum)
Inlet Temperature?	tbd	Fahrenheit (minimum)	tbd	Fahrenheit (maximum)
Outlet Temperature?	tbd	Fahrenheit (minimum)	tbd	Fahrenheit (maximum)

Describe maintenance of baghouse (use of dye test, visual inspections, changing bag frequency, etc.):

to be determined

Stack Information: If this application is a renewal, contact the air program. We may have this information.

X- Coordinate or Easting: [1]		feet	or	686,561.94	meters
Y- Coordinate or Northing: [1]		feet	or	4,741,694.00	meters
Base Elevation of Stack: [1]	1,220.00	feet	or		meters
Stack Height:	115.00	feet	or		meters
Exit Stack Diameter	5.00	feet	or		meters
Exit Stack Temperature	100.00	degrees Fahrenheit			

Exit Stack Velocity and/or Flow Rate:

Velocity:	50.96	feet per second		meters per second

and/or

Flow Rate:		actual cubic feet per minute		actual cubic meters per second

[1] - Portable asphalt plants, rock crushers, or concrete plants do not have to provide the requested information in these categories.

South Dakota Department of Environment & Natural Resources
Protecting SD's Tomorrow...Today

Air Quality Permit Application

Baghouse

This form is to be submitted, if necessary, along with the Title V (Part 70) Operating Permit, Minor Operating Permit, or the General Permits.

(please complete shaded areas)

Equipment and processes served by this baghouse (please list all equipment and processes):

Equipment and Processes

1.	Petroleum Coke Storage Building
2.	
3.	
4.	
5.	

Manufacturer Information:

Manufacturer?	to be determined		
Manufacturer date?	to be determined	Installation date?	to be determined
Manufacturer's designed control efficiency?	to be determined	%	

Type of baghouse (please check one)?

☐	Reverse Air	☐	Pulse Jet	☐	Shaker	☐	Other (specify) to be determined

Type of bags?	to be determined		
Number of bags?		Air/cloth ratio?	

Baghouse Operation and Maintenance:

Pressure drop across baghouse?	tbd	inches water (minimum)	tbd	inches water (maximum)
Inlet Temperature?	tbd	Fahrenheit (minimum)	tbd	Fahrenheit (maximum)
Outlet Temperature?	tbd	Fahrenheit (minimum)	tbd	Fahrenheit (maximum)

Describe maintenance of baghouse (use of dye test, visual inspections, changing bag frequency, etc.):

to be determined

Stack Information: If this application is a renewal, contact the air program. We may have this information.

X- Coordinate or Easting: [1]		feet	or	686,562.94	meters
Y- Coordinate or Northing: [1]		feet	or	4,741,610.00	meters
Base Elevation of Stack: [1]	1,220.00	feet	or		meters
Stack Height:	115.00	feet	or		meters
Exit Stack Diameter	5.00	feet	or		meters
Exit Stack Temperature	100.00	degrees Fahrenheit			

Exit Stack Velocity and/or Flow Rate:

Velocity:	50.96	feet per second		meters per second

and/or

Flow Rate:		actual cubic feet per minute		actual cubic meters per second

[1] - Portable asphalt plants, rock crushers, or concrete plants do not have to provide the requested information in these categories.

South Dakota Department of Environment & Natural Resources
Protecting SD's Tomorrow...Today

Air Quality Permit Application Form

Miscellaneous Process

This form is to be submitted, if necessary, along with the Title V (Part 70) Operating Permit or Minor Operating Permit.

(please complete shaded areas)

1. Facility identification (i.e., Boiler #1, Unit #1, etc): Coal/Coke Unloading Building
2. Manufacturer: to be determined | Manufacture date: tbd
3. Model number: to be determined
4. Type (i.e., steam boiler, simple cycle combustion turbine, generator, etc.)

n/a

5. Maximum designed operating rate (name plate):

n/a

or _____ horsepower

or _____ kilowatts

6. Check the appropriate box(es) for primary and secondary fuels:

☐ Natural gas ☐ Propane

☐ Distillate oil Sulfur content _____ Weight percent

☐ Residual oil Sulfur content _____ Weight percent

☐ Bituminous Coal ☐ Subbituminous Coal ☐ Lignite Coal

Coal sulfur content _____ Weight percent Coal ash content _____ Weight percent

☐ Other (please specify) n/a

7. Has a stack test been conducted (check appropriate box)? ☐ Yes ☑ No

If a stack test has been conducted, please attach a copy of the most recent stack test report to this application. If the Department already has a copy of the most recent stack test, please specify the date of most recent stack test.

Date of most recent stack test: _____

Control Equipment: If applicable, types of air pollution control equipment (Examples: baghouse, cyclone, wet scrubber, electrostatic precipitator, thermal oxidizer, miscellaneous control device, etc.).

fabric filter

Please complete the appropriate air quality permit application form for each type of control equipment that controls air emissions from this operation.

Stack Information: If this application is a renewal, contact the air program. We may have this information.

X- Coordinate or Easting:		feet		meters
Y- Coordinate or Northing:		feet		meters
Base Elevation of Stack:		feet		meters
Stack Height:		feet		meters
Exit Stack Diameter		feet		meters
Exit Stack Temperature		degrees Fahrenheit		

Exit Stack Velocity and/or Flow Rate:

Velocity:		feet per second		meters per second

and/or

Flow Rate:		actual cubic feet per minute		actual cubic meters per second

Coal/Coke Unloading Building exhausts to atmosphere through fabric filter.
See attached E1636V1 form for fabric filter stack parameters.

South Dakota Department of Environment & Natural Resources
Protecting SD's Tomorrow...Today

Air Quality Permit Application

Baghouse

This form is to be submitted, if necessary, along with the Title V (Part 70) Operating Permit, Minor Operating Permit, or the General Permits.

(please complete shaded areas)

Equipment and processes served by this baghouse (please list all equipment and processes):

Equipment and Processes

1.	Coal/Coke Unloading Building
2.	
3.	
4.	
5.	

Manufacturer Information:

Manufacturer?	to be determined		
Manufacturer date?	to be determined	Installation date?	to be determined
Manufacturer's designed control efficiency?	to be determined	%	

Type of baghouse (please check one)?

☐	Reverse Air	☐	Pulse Jet	☐	Shaker	☐	Other (specify) to be determined

Type of bags?	to be determined		
Number of bags?		Air/cloth ratio?	

Baghouse Operation and Maintenance:

Pressure drop across baghouse?	tbd	inches water (minimum)	tbd	inches water (maximum)
Inlet Temperature?	tbd	Fahrenheit (minimum)	tbd	Fahrenheit (maximum)
Outlet Temperature?	tbd	Fahrenheit (minimum)	tbd	Fahrenheit (maximum)

Describe maintenance of baghouse (use of dye test, visual inspections, changing bag frequency, etc.):

to be determined

Stack Information: If this application is a renewal, contact the air program. We may have this information.

X- Coordinate or Easting: [1]		feet	or	686,652.00	meters
Y- Coordinate or Northing: [1]		feet	or	4,741,525.00	meters
Base Elevation of Stack: [1]	1,220.00	feet	or		meters
Stack Height:	40.00	feet	or		meters
Exit Stack Diameter	3.00	feet	or		meters
Exit Stack Temperature	80.00	degrees Fahrenheit			

Exit Stack Velocity and/or Flow Rate:

Velocity:	47.18	feet per second		meters per second

and/or

Flow Rate:		actual cubic feet per minute		actual cubic meters per second

[1] - Portable asphalt plants, rock crushers, or concrete plants do not have to provide the requested information in these categories.

South Dakota Department of Environment & Natural Resources
Protecting SD's Tomorrow...Today

Air Quality Permit Application Form

Miscellaneous Process

This form is to be submitted, if necessary, along with the Title V (Part 70) Operating Permit or Minor Operating Permit.
(please complete shaded areas)

1. Facility identification (i.e., Boiler #1, Unit #1, etc): Flux Unloading Building
2. Manufacturer: to be determined Manufacture date: tbd
3. Model number: to be determined
4. Type (i.e., steam boiler, simple cycle combustion turbine, generator, etc.)

n/a

5. Maximum designed operating rate (name plate):

n/a
or horsepower
or kilowatts

6. Check the appropriate box(es) for primary and secondary fuels:

☐ Natural gas ☐ Propane
☐ Distillate oil Sulfur content Weight percent
☐ Residual oil Sulfur content Weight percent
☐ Bituminous Coal ☐ Subbituminous Coal ☐ Lignite Coal
Coal sulfur content Weight percent Coal ash content Weight percent
☐ Other (please specify) n/a

7. Has a stack test been conducted (check appropriate box)? ☐ Yes ☑ No

If a stack test has been conducted, please attach a copy of the most recent stack test report to this application. If the Department already has a copy of the most recent stack test, please specify the date of most recent stack test.

Date of most recent stack test:

Control Equipment: If applicable, types of air pollution control equipment (Examples: baghouse, cyclone, wet scrubber, electrostatic precipitator, thermal oxidizer, miscellaneous control device, etc.).

fabric filter

Please complete the appropriate air quality permit application form for each type of control equipment that controls air emissions from this operation.

Stack Information: If this application is a renewal, contact the air program. We may have this information.

X- Coordinate or Easting:		feet		meters
Y- Coordinate or Northing:		feet		meters
Base Elevation of Stack:		feet		meters
Stack Height:		feet		meters
Exit Stack Diameter		feet		meters
Exit Stack Temperature		degrees Fahrenheit		

Exit Stack Velocity and/or Flow Rate:

Velocity: _____ feet per second _____ meters per second

and/or

Flow Rate: _____ actual cubic feet per minute _____ actual cubic meters per second

Flux Unloading Building exhausts to atmosphere through fabric filter. See attached E1636V1 form for fabric filter stack parameters.

South Dakota Department of Environment & Natural Resources
Protecting SD's Tomorrow...Today

Air Quality Permit Application

Baghouse

This form is to be submitted, if necessary, along with the Title V (Part 70) Operating Permit, Minor Operating Permit, or the General Permits.

(please complete shaded areas)

Equipment and processes served by this baghouse (please list all equipment and processes):

Equipment and Processes

1.	Flux Unloading Building
2.	
3.	
4.	
5.	

Manufacturer Information:

Manufacturer?	to be determined		
Manufacturer date?	to be determined	Installation date?	to be determined
Manufacturer's designed control efficiency?	to be determined	%	

Type of baghouse (please check one)?

☐	Reverse Air	☐	Pulse Jet	☐	Shaker	☐	Other (specify) to be determined

Type of bags?	to be determined		
Number of bags?		Air/cloth ratio?	

Baghouse Operation and Maintenance:

Pressure drop across baghouse?	tbd	inches water (minimum)	tbd	inches water (maximum)
Inlet Temperature?	tbd	Fahrenheit (minimum)	tbd	Fahrenheit (maximum)
Outlet Temperature?	tbd	Fahrenheit (minimum)	tbd	Fahrenheit (maximum)

Describe maintenance of baghouse (use of dye test, visual inspections, changing bag frequency, etc.):

to be determined

Stack Information: If this application is a renewal, contact the air program. We may have this information.

X- Coordinate or Easting: [1]		feet	or	686,774.19	meters
Y- Coordinate or Northing: [1]		feet	or	4,741,521.00	meters
Base Elevation of Stack: [1]	1,220.00	feet	or		meters
Stack Height:	40.00	feet	or		meters
Exit Stack Diameter	3.00	feet	or		meters
Exit Stack Temperature	80.00	degrees Fahrenheit			

Exit Stack Velocity and/or Flow Rate:

Velocity:	23.59	feet per second		meters per second

and/or

Flow Rate:		actual cubic feet per minute		actual cubic meters per second

[1] - Portable asphalt plants, rock crushers, or concrete plants do not have to provide the requested information in these categories.

South Dakota Department of Environment & Natural Resources
Protecting SD's Tomorrow...Today

Air Quality Permit Application Form

Miscellaneous Process

This form is to be submitted, if necessary, along with the Title V (Part 70) Operating Permit or Minor Operating Permit.

(please complete shaded areas)

1. Facility identification (i.e., Boiler #1, Unit #1, etc): Slag Loading Building
2. Manufacturer: to be determined Manufacture date: tbd
3. Model number: to be determined
4. Type (i.e., steam boiler, simple cycle combustion turbine, generator, etc.)

n/a

5. Maximum designed operating rate (name plate):

n/a

or horsepower

or kilowatts

6. Check the appropriate box(es) for primary and secondary fuels:

☐ Natural gas ☐ Propane

☐ Distillate oil Sulfur content Weight percent

☐ Residual oil Sulfur content Weight percent

☐ Bituminous Coal ☐ Subbituminous Coal ☐ Lignite Coal

Coal sulfur content Weight percent Coal ash content Weight percent

☐ Other (please specify) n/a

7. Has a stack test been conducted (check appropriate box)? ☐ Yes ☑ No

If a stack test has been conducted, please attach a copy of the most recent stack test report to this application. If the Department already has a copy of the most recent stack test, please specify the date of most recent stack test.

Date of most recent stack test:

Control Equipment: If applicable, types of air pollution control equipment (Examples: baghouse, cyclone, wet scrubber, electrostatic precipitator, thermal oxidizer, miscellaneous control device, etc.).

fabric filter

Please complete the appropriate air quality permit application form for each type of control equipment that controls air emissions from this operation.

Stack Information: If this application is a renewal, contact the air program. We may have this information.

X- Coordinate or Easting:		feet		meters
Y- Coordinate or Northing:		feet		meters
Base Elevation of Stack:		feet		meters
Stack Height:		feet		meters
Exit Stack Diameter		feet		meters
Exit Stack Temperature		degrees Fahrenheit		

Exit Stack Velocity and/or Flow Rate:

Velocity: _____ feet per second _____ meters per second

and/or

Flow Rate: _____ actual cubic feet per minute _____ actual cubic meters per second

Slag Loading Building exhausts to atmosphere through fabric filter. See attached E1636V1 form for fabric filter stack parameters.

South Dakota Department of Environment & Natural Resources
Protecting SD's Tomorrow...Today

Air Quality Permit Application

Baghouse

This form is to be submitted, if necessary, along with the Title V (Part 70) Operating Permit, Minor Operating Permit, or the General Permits.

(please complete shaded areas)

Equipment and processes served by this baghouse (please list all equipment and processes):

Equipment and Processes

1.	Slag Loading Building
2.	
3.	
4.	
5.	

Manufacturer Information:

Manufacturer?	to be determined		
Manufacturer date?	to be determined	Installation date?	to be determined
Manufacturer's designed control efficiency?	to be determined	%	

Type of baghouse (please check one)?

☐	Reverse Air	☐	Pulse Jet	☐	Shaker	☐	Other (specify) to be determined

Type of bags?	to be determined		
Number of bags?		Air/cloth ratio?	

Baghouse Operation and Maintenance:

Pressure drop across baghouse?	tbd	inches water (minimum)	tbd	inches water (maximum)
Inlet Temperature?	tbd	Fahrenheit (minimum)	tbd	Fahrenheit (maximum)
Outlet Temperature?	tbd	Fahrenheit (minimum)	tbd	Fahrenheit (maximum)

Describe maintenance of baghouse (use of dye test, visual inspections, changing bag frequency, etc.):

to be determined

Stack Information: If this application is a renewal, contact the air program. We may have this information.

X- Coordinate or Easting: [1]		feet	or	686,812.50	meters
Y- Coordinate or Northing: [1]		feet	or	4,741,519.00	meters
Base Elevation of Stack: [1]	1,220.00	feet	or		meters
Stack Height:	40.00	feet	or		meters
Exit Stack Diameter	3.00	feet	or		meters
Exit Stack Temperature	80.00	degrees Fahrenheit			

Exit Stack Velocity and/or Flow Rate:

Velocity:	23.60	feet per second		meters per second

and/or

Flow Rate:		actual cubic feet per minute		actual cubic meters per second

[1] - Portable asphalt plants, rock crushers, or concrete plants do not have to provide the requested information in these categories.

South Dakota Department of Environment & Natural Resources
Protecting SD's Tomorrow...Today

Air Quality Permit Application Form

Boiler Turbine or Furnace

This form is to be submitted, if necessary, along with the Title V (Part 70) Operating Permit or Minor Operating Permit.

(please complete shaded areas)

1. Facility identification (i.e., Boiler #1, Unit #1, etc): Combined Cycle Gas Turbine No. 1
2. Manufacturer: to be determined | Manufacture date: n/a
3. Model number: to be determined
4. Type (i.e., steam boiler, simple cycle combustion turbine, generator, etc.)

combined cycle gas turbine

5. Maximum designed operating rate (name plate):

	1,677.4	million Btus per hour heat input	
or		horsepower with boiler efficiency:	
or		kilowatts with boiler efficiency:	

6. Check the appropriate box(es) for primary and secondary fuels:

✔	Natural gas			☐	Propane
✔	Distillate oil	Sulfur content	0.0015	Weight percent	
☐	Residual oil	Sulfur content		Weight percent	
☐	Bituminous Coal	☐	Subbituminous Coal	☐	Lignite Coal
Coal sulfur content		Weight percent	Coal ash content		Weight percent
✔	Other (please specify)	syngas			

7. Has a stack test been conducted (check appropriate box)? ☐ Yes ✔ No

If a stack test has been conducted, please attach a copy of the most recent stack test report to this application. If the Department already has a copy of the most recent stack test, please specify the date of most recent stack test.

Date of most recent stack test:

Control Equipment: If applicable, types of air pollution control equipment (Examples: baghouse, cyclone, wet scrubber, electrostatic precipitator, thermal oxidizer, miscellaneous control device, etc.).

SCR and oxidation catalyst systems

Please complete the appropriate air quality permit application form for each type of control equipment that controls air emissions from this operation.

Stack Information: If this application is a renewal, contact the air program. We may have this information.

X- Coordinate or Easting:		feet		meters
Y- Coordinate or Northing:		feet		meters
Base Elevation of Stack:		feet		meters
Stack Height:		feet		meters
Exit Stack Diameter		feet		meters
Exit Stack Temperature		degrees Fahrenheit		

Exit Stack Velocity and/or Flow Rate:

Velocity:		feet per second		meters per second

and/or

Flow Rate:		actual cubic feet per minute		actual cubic meters per second

Combined Cycle Gas Turbine No. 1 exhausts to atmosphere through oxidation catalyst and SCR systems. See attached E1639V1 forms for stack parameters.

Air Quality Permit Application Form

Miscellaneous Control Device

This form is to be submitted, if necessary, along with the Title V (Part 70) Operating Permit, Minor Operating Permit, or the General Permits.

(please complete shaded areas)

Describe the miscellaneous control device and how it works:

Flue gas passes through a catalytic reactor, where the catalyst promotes oxidation reactions that convert CO and VOC to carbon dioxide and water.

Equipment and processes served by this baghouse (please list all equipment and processes):

	Equipment and Processes
1.	Combined Cycle Gas Turbine No. 1
2.	
3.	
4.	
5.	

Manufacturer Information:

Manufacturer?	to be determined (tbd)		
Manufacturer date?	tbd	Installation date?	tbd
Manufacturer's designed control efficiency?	tbd	%	

Miscellaneous Control Device Operation and Maintenance:

Pressure drop across control unit?	n/a	Inches water (minimum)	n/a	inches water (maximum)
Inlet Temperature?	tbd	Fahrenheit (minimum)	tbd	Fahrenheit (maximum)
Outlet Temperature?	n/a	Fahrenheit (minimum)	n/a	Fahrenheit (maximum)

Describe maintenance of control unit (use of visual inspections, maintenance schedule, etc.):

to be determined

Stack Information: If this application is a renewal, contact the air program. We may have this information.

X- Coordinate or Easting: [1]		feet	or	686,874.25	meters
Y- Coordinate or Northing: [1]		feet	or	4,741,885.50	meters
Base Elevation of Stack: [1]	1,220.00	feet	or		meters
Stack Height:	200.00	feet	or		meters
Exit Stack Diameter	13.40	feet	or		meters
Exit Stack Temperature	275.00	degrees Fahrenheit			

Exit Stack Velocity and/or Flow Rate:

Velocity:	75.00	feet per second		meters per second

and/or

Flow Rate:		actual cubic feet per minute		actual cubic meters per second

[1] - Portable asphalt plants, rock crushers, or concrete plants do not have to provide the requested information in these categories.

Air Quality Permit Application Form

Miscellaneous Control Device

This form is to be submitted, if necessary, along with the Title V (Part 70) Operating Permit, Minor Operating Permit, or the General Permits.

(please complete shaded areas)

Describe the miscellaneous control device and how it works:

Ammonia is injected into the flue gas upstream of a catalytic reactor, where the catalyst promotes a reduction reaction that converts NOx to molecular nitrogen.

Equipment and processes served by this baghouse (please list all equipment and processes):

	Equipment and Processes
1.	Combined Cycle Gas Turbine No. 1
2.	
3.	
4.	
5.	

Manufacturer Information:

Manufacturer?	to be determined (tbd)		
Manufacturer date?	tbd	Installation date?	tbd
Manufacturer's designed control efficiency?	tbd	%	

Miscellaneous Control Device Operation and Maintenance:

Pressure drop across control unit?	n/a	Inches water (minimum)	n/a	inches water (maximum)
Inlet Temperature?	tbd	Fahrenheit (minimum)	tbd	Fahrenheit (maximum)
Outlet Temperature?	n/a	Fahrenheit (minimum)	n/a	Fahrenheit (maximum)

Describe maintenance of control unit (use of visual inspections, maintenance schedule, etc.):

to be determined

Stack Information: If this application is a renewal, contact the air program. We may have this information.

X- Coordinate or Easting: [1]		feet	or	686,874.25	meters
Y- Coordinate or Northing: [1]		feet	or	4,741,885.50	meters
Base Elevation of Stack: [1]	1,220.00	feet	or		meters
Stack Height:	200.00	feet	or		meters
Exit Stack Diameter	13.40	feet	or		meters
Exit Stack Temperature	275.00	degrees Fahrenheit			

Exit Stack Velocity and/or Flow Rate:

Velocity:	75.00	feet per second		meters per second

and/or

Flow Rate:		actual cubic feet per minute		actual cubic meters per second

[1] - Portable asphalt plants, rock crushers, or concrete plants do not have to provide the requested information in these categories.

South Dakota Department of Environment & Natural Resources
Protecting SD's Tomorrow...Today

Air Quality Permit Application Form

Boiler Turbine or Furnace

This form is to be submitted, if necessary, along with the Title V (Part 70) Operating Permit or Minor Operating Permit.
(please complete shaded areas)

1. Facility identification (i.e., Boiler #1, Unit #1, etc): Combined Cycle Gas Turbine No. 2
2. Manufacturer: to be determined | Manufacture date: n/a
3. Model number: to be determined
4. Type (i.e., steam boiler, simple cycle combustion turbine, generator, etc.)

combined cycle gas turbine

5. Maximum designed operating rate (name plate):

	1,677.4	million Btus per hour heat input	
or		horsepower with boiler efficiency:	
or		kilowatts with boiler efficiency:	

6. Check the appropriate box(es) for primary and secondary fuels:

✔	Natural gas			☐	Propane
✔	Distillate oil	Sulfur content	0.0015	Weight percent	
☐	Residual oil	Sulfur content		Weight percent	
☐	Bituminous Coal	☐	Subbituminous Coal	☐	Lignite Coal
Coal sulfur content		Weight percent	Coal ash content		Weight percent
✔	Other (please specify)	syngas			

7. Has a stack test been conducted (check appropriate box)? ☐ Yes ✔ No

If a stack test has been conducted, please attach a copy of the most recent stack test report to this application. If the Department already has a copy of the most recent stack test, please specify the date of most recent stack test.

Date of most recent stack test:

Control Equipment: If applicable, types of air pollution control equipment (Examples: baghouse, cyclone, wet scrubber, electrostatic precipitator, thermal oxidizer, miscellaneous control device, etc.).

SCR and oxidation catalyst systems

Please complete the appropriate air quality permit application form for each type of control equipment that controls air emissions from this operation.

Stack Information: If this application is a renewal, contact the air program. We may have this information.

X- Coordinate or Easting:		feet		meters
Y- Coordinate or Northing:		feet		meters
Base Elevation of Stack:		feet		meters
Stack Height:		feet		meters
Exit Stack Diameter		feet		meters
Exit Stack Temperature		degrees Fahrenheit		

Exit Stack Velocity and/or Flow Rate:

Velocity:		feet per second		meters per second

and/or

Flow Rate:		actual cubic feet per minute		actual cubic meters per second

Combined Cycle Gas Turbine No. 2 exhausts to atmosphere through oxidation catalyst and SCR systems. See attached E1639V1 forms for stack parameters.

SD EForm - 1639 V1

Air Quality Permit Application Form

Miscellaneous Control Device

This form is to be submitted, if necessary, along with the Title V (Part 70) Operating Permit, Minor Operating Permit, or the General Permits.

(please complete shaded areas)

Describe the miscellaneous control device and how it works:

Flue gas passes through a catalytic reactor, where the catalyst promotes oxidation reactions that convert CO and VOC to carbon dioxide and water.

Equipment and processes served by this baghouse (please list all equipment and processes):

	Equipment and Processes
1.	Combined Cycle Gas Turbine No. 2
2.	
3.	
4.	
5.	

Manufacturer Information:

Manufacturer?	to be determined (tbd)		
Manufacturer date?	tbd	Installation date?	tbd
Manufacturer's designed control efficiency?	tbd	%	

Miscellaneous Control Device Operation and Maintenance:

Pressure drop across control unit?	n/a	Inches water (minimum)	n/a	inches water (maximum)
Inlet Temperature?	tbd	Fahrenheit (minimum)	tbd	Fahrenheit (maximum)
Outlet Temperature?	n/a	Fahrenheit (minimum)	n/a	Fahrenheit (maximum)

Describe maintenance of control unit (use of visual inspections, maintenance schedule, etc.):

to be determined

Stack Information: If this application is a renewal, contact the air program. We may have this information.

X- Coordinate or Easting: [1]		feet	or	686,904.00	meters
Y- Coordinate or Northing: [1]		feet	or	4,741,885.50	meters
Base Elevation of Stack: [1]	1,220.00	feet	or		meters
Stack Height:	200.00	feet	or		meters
Exit Stack Diameter	13.40	feet	or		meters
Exit Stack Temperature	275.00	degrees Fahrenheit			

Exit Stack Velocity and/or Flow Rate:

Velocity:	75.00	feet per second		meters per second

and/or

Flow Rate:		actual cubic feet per minute		actual cubic meters per second

[1] - Portable asphalt plants, rock crushers, or concrete plants do not have to provide the requested information in these categories.

SD EForm - 1639 V1

Air Quality Permit Application Form

Miscellaneous Control Device

This form is to be submitted, if necessary, along with the Title V (Part 70) Operating Permit, Minor Operating Permit, or the General Permits.

(please complete shaded areas)

Describe the miscellaneous control device and how it works:

Ammonia is injected into the flue gas upstream of a catalytic reactor, where the catalyst promotes a reduction reaction that converts NOx to molecular nitrogen.

Equipment and processes served by this baghouse (please list all equipment and processes):

	Equipment and Processes
1.	Combined Cycle Gas Turbine No. 2
2.	
3.	
4.	
5.	

Manufacturer Information:

Manufacturer?	to be determined (tbd)		
Manufacturer date?	tbd	Installation date?	tbd
Manufacturer's designed control efficiency?	tbd	%	

Miscellaneous Control Device Operation and Maintenance:

Pressure drop across control unit?	n/a	Inches water (minimum)	n/a	inches water (maximum)
Inlet Temperature?	tbd	Fahrenheit (minimum)	tbd	Fahrenheit (maximum)
Outlet Temperature?	n/a	Fahrenheit (minimum)	n/a	Fahrenheit (maximum)

Describe maintenance of control unit (use of visual inspections, maintenance schedule, etc.):

to be determined

Stack Information: If this application is a renewal, contact the air program. We may have this information.

X- Coordinate or Easting: [1]		feet	or	686,904.00	meters
Y- Coordinate or Northing: [1]		feet	or	4,741,885.50	meters
Base Elevation of Stack: [1]	1,220.00	feet	or		meters
Stack Height:	200.00	feet	or		meters
Exit Stack Diameter	13.40	feet	or		meters
Exit Stack Temperature	275.00	degrees Fahrenheit			

Exit Stack Velocity and/or Flow Rate:

Velocity:	75.00	feet per second		meters per second

and/or

Flow Rate:		actual cubic feet per minute		actual cubic meters per second

[1] - Portable asphalt plants, rock crushers, or concrete plants do not have to provide the requested information in these categories.

South Dakota Department of Environment & Natural Resources
Protecting SD's Tomorrow...Today

Air Quality Permit Application Form

Boiler Turbine or Furnace

This form is to be submitted, if necessary, along with the Title V (Part 70) Operating Permit or Minor Operating Permit.
(please complete shaded areas)

1. Facility identification (i.e., Boiler #1, Unit #1, etc): Combined Cycle Gas Turbine No. 3
2. Manufacturer: to be determined | Manufacture date: n/a
3. Model number: to be determined
4. Type (i.e., steam boiler, simple cycle combustion turbine, generator, etc.)

combined cycle gas turbine

5. Maximum designed operating rate (name plate):

	1,677.4	million Btus per hour heat input	
or		horsepower with boiler efficiency:	
or		kilowatts with boiler efficiency:	

6. Check the appropriate box(es) for primary and secondary fuels:

✔	Natural gas			☐	Propane
✔	Distillate oil	Sulfur content	0.0015	Weight percent	
☐	Residual oil	Sulfur content		Weight percent	
☐	Bituminous Coal	☐	Subbituminous Coal	☐	Lignite Coal
Coal sulfur content		Weight percent	Coal ash content		Weight percent
✔	Other (please specify)	syngas			

7. Has a stack test been conducted (check appropriate box)? ☐ Yes ✔ No

If a stack test has been conducted, please attach a copy of the most recent stack test report to this application. If the Department already has a copy of the most recent stack test, please specify the date of most recent stack test.

Date of most recent stack test:

Control Equipment: If applicable, types of air pollution control equipment (Examples: baghouse, cyclone, wet scrubber, electrostatic precipitator, thermal oxidizer, miscellaneous control device, etc.).

SCR and oxidation catalyst systems

Please complete the appropriate air quality permit application form for each type of control equipment that controls air emissions from this operation.

Stack Information: If this application is a renewal, contact the air program. We may have this information.

X- Coordinate or Easting:		feet		meters
Y- Coordinate or Northing:		feet		meters
Base Elevation of Stack:		feet		meters
Stack Height:		feet		meters
Exit Stack Diameter		feet		meters
Exit Stack Temperature		degrees Fahrenheit		

Exit Stack Velocity and/or Flow Rate:

Velocity:		feet per second		meters per second

and/or

Flow Rate:		actual cubic feet per minute		actual cubic meters per second

Combined Cycle Gas Turbine No. 3 exhausts to atmosphere through oxidation catalyst and SCR systems. See attached E1639V1 forms for stack parameters.

Air Quality Permit Application Form

Miscellaneous Control Device

This form is to be submitted, if necessary, along with the Title V (Part 70) Operating Permit, Minor Operating Permit, or the General Permits.

(please complete shaded areas)

Describe the miscellaneous control device and how it works:

Flue gas passes through a catalytic reactor, where the catalyst promotes oxidation reactions that convert CO and VOC to carbon dioxide and water.

Equipment and processes served by this baghouse (please list all equipment and processes):

	Equipment and Processes
1.	Combined Cycle Gas Turbine No. 3
2.	
3.	
4.	
5.	

Manufacturer Information:

Manufacturer?	to be determined (tbd)		
Manufacturer date?	tbd	Installation date?	tbd
Manufacturer's designed control efficiency?	tbd	%	

Miscellaneous Control Device Operation and Maintenance:

Pressure drop across control unit?	n/a	Inches water (minimum)	n/a	inches water (maximum)
Inlet Temperature?	tbd	Fahrenheit (minimum)	tbd	Fahrenheit (maximum)
Outlet Temperature?	n/a	Fahrenheit (minimum)	n/a	Fahrenheit (maximum)

Describe maintenance of control unit (use of visual inspections, maintenance schedule, etc.):

to be determined

Stack Information: If this application is a renewal, contact the air program. We may have this information.

X- Coordinate or Easting: [1]		feet	or	686,933.75	meters
Y- Coordinate or Northing: [1]		feet	or	4,741,885.50	meters
Base Elevation of Stack: [1]	1,220.00	feet	or		meters
Stack Height:	200.00	feet	or		meters
Exit Stack Diameter	13.40	feet	or		meters
Exit Stack Temperature	275.00	degrees Fahrenheit			

Exit Stack Velocity and/or Flow Rate:

Velocity:	75.00	feet per second		meters per second

and/or

Flow Rate:		actual cubic feet per minute		actual cubic meters per second

[1] - Portable asphalt plants, rock crushers, or concrete plants do not have to provide the requested information in these categories.

Air Quality Permit Application Form

Miscellaneous Control Device

This form is to be submitted, if necessary, along with the Title V (Part 70) Operating Permit, Minor Operating Permit, or the General Permits.

(please complete shaded areas)

Describe the miscellaneous control device and how it works:

Ammonia is injected into the flue gas upstream of a catalytic reactor, where the catalyst promotes a reduction reaction that converts NOx to molecular nitrogen.

Equipment and processes served by this baghouse (please list all equipment and processes):

	Equipment and Processes
1.	Combined Cycle Gas Turbine No. 3
2.	
3.	
4.	
5.	

Manufacturer Information:

Manufacturer?	to be determined (tbd)		
Manufacturer date?	tbd	Installation date?	tbd
Manufacturer's designed control efficiency?	tbd	%	

Miscellaneous Control Device Operation and Maintenance:

Pressure drop across control unit?	n/a	Inches water (minimum)	n/a	inches water (maximum)
Inlet Temperature?	tbd	Fahrenheit (minimum)	tbd	Fahrenheit (maximum)
Outlet Temperature?	n/a	Fahrenheit (minimum)	n/a	Fahrenheit (maximum)

Describe maintenance of control unit (use of visual inspections, maintenance schedule, etc.):

to be determined

Stack Information: If this application is a renewal, contact the air program. We may have this information.

X- Coordinate or Easting: [1]		feet	or	686,933.75	meters
Y- Coordinate or Northing: [1]		feet	or	4,741,885.50	meters
Base Elevation of Stack: [1]	1,220.00	feet	or		meters
Stack Height:	200.00	feet	or		meters
Exit Stack Diameter	13.40	feet	or		meters
Exit Stack Temperature	275.00	degrees Fahrenheit			

Exit Stack Velocity and/or Flow Rate:

Velocity:	75.00	feet per second		meters per second

and/or

Flow Rate:		actual cubic feet per minute		actual cubic meters per second

[1] - Portable asphalt plants, rock crushers, or concrete plants do not have to provide the requested information in these categories.

South Dakota Department of Environment & Natural Resources
Protecting SD's Tomorrow...Today

Air Quality Permit Application Form

Boiler Turbine or Furnace

This form is to be submitted, if necessary, along with the Title V (Part 70) Operating Permit or Minor Operating Permit.

(please complete shaded areas)

1. Facility identification (i.e., Boiler #1, Unit #1, etc): Combined Cycle Gas Turbine No. 4
2. Manufacturer: to be determined | Manufacture date: n/a
3. Model number: to be determined
4. Type (i.e., steam boiler, simple cycle combustion turbine, generator, etc.)

combined cycle gas turbine

5. Maximum designed operating rate (name plate):

	1,677.4	million Btus per hour heat input	
or		horsepower with boiler efficiency:	
or		kilowatts with boiler efficiency:	

6. Check the appropriate box(es) for primary and secondary fuels:

✔	Natural gas			☐	Propane
✔	Distillate oil	Sulfur content	0.0015	Weight percent	
☐	Residual oil	Sulfur content		Weight percent	
☐	Bituminous Coal	☐	Subbituminous Coal	☐	Lignite Coal
Coal sulfur content		Weight percent	Coal ash content		Weight percent
✔	Other (please specify)	syngas			

7. Has a stack test been conducted (check appropriate box)? ☐ Yes ✔ No

If a stack test has been conducted, please attach a copy of the most recent stack test report to this application. If the Department already has a copy of the most recent stack test, please specify the date of most recent stack test.

Date of most recent stack test:

Control Equipment: If applicable, types of air pollution control equipment (Examples: baghouse, cyclone, wet scrubber, electrostatic precipitator, thermal oxidizer, miscellaneous control device, etc.).

SCR and oxidation catalyst systems

Please complete the appropriate air quality permit application form for each type of control equipment that controls air emissions from this operation.

Stack Information: If this application is a renewal, contact the air program. We may have this information.

X- Coordinate or Easting:		feet		meters
Y- Coordinate or Northing:		feet		meters
Base Elevation of Stack:		feet		meters
Stack Height:		feet		meters
Exit Stack Diameter		feet		meters
Exit Stack Temperature		degrees Fahrenheit		

Exit Stack Velocity and/or Flow Rate:

Velocity:		feet per second		meters per second

and/or

Flow Rate:		actual cubic feet per minute		actual cubic meters per second

Combined Cycle Gas Turbine No. 4 exhausts to atmosphere through oxidation catalyst and SCR systems. See attached E1639V1 forms for stack parameters.

Air Quality Permit Application Form

Miscellaneous Control Device

This form is to be submitted, if necessary, along with the Title V (Part 70) Operating Permit, Minor Operating Permit, or the General Permits.

(please complete shaded areas)

Describe the miscellaneous control device and how it works:

Flue gas passes through a catalytic reactor, where the catalyst promotes oxidation reactions that convert CO and VOC to carbon dioxide and water.

Equipment and processes served by this baghouse (please list all equipment and processes):

	Equipment and Processes
1.	Combined Cycle Gas Turbine No. 4
2.	
3.	
4.	
5.	

Manufacturer Information:

Manufacturer?	to be determined (tbd)		
Manufacturer date?	tbd	Installation date?	tbd
Manufacturer's designed control efficiency?	tbd	%	

Miscellaneous Control Device Operation and Maintenance:

Pressure drop across control unit?	n/a	Inches water (minimum)	n/a	inches water (maximum)
Inlet Temperature?	tbd	Fahrenheit (minimum)	tbd	Fahrenheit (maximum)
Outlet Temperature?	n/a	Fahrenheit (minimum)	n/a	Fahrenheit (maximum)

Describe maintenance of control unit (use of visual inspections, maintenance schedule, etc.):

to be determined

Stack Information: If this application is a renewal, contact the air program. We may have this information.

X- Coordinate or Easting: [1]		feet	or	686,962.88	meters
Y- Coordinate or Northing: [1]		feet	or	4,741,885.50	meters
Base Elevation of Stack: [1]	1,220.00	feet	or		meters
Stack Height:	200.00	feet	or		meters
Exit Stack Diameter	13.40	feet	or		meters
Exit Stack Temperature	275.00	degrees Fahrenheit			

Exit Stack Velocity and/or Flow Rate:

Velocity:	75.00	feet per second		meters per second

and/or

Flow Rate:		actual cubic feet per minute		actual cubic meters per second

[1] - Portable asphalt plants, rock crushers, or concrete plants do not have to provide the requested information in these categories.

Air Quality Permit Application Form

Miscellaneous Control Device

This form is to be submitted, if necessary, along with the Title V (Part 70) Operating Permit, Minor Operating Permit, or the General Permits.

(please complete shaded areas)

Describe the miscellaneous control device and how it works:

Ammonia is injected into the flue gas upstream of a catalytic reactor, where the catalyst promotes a reduction reaction that converts NOx to molecular nitrogen.

Equipment and processes served by this baghouse (please list all equipment and processes):

	Equipment and Processes
1.	Combined Cycle Gas Turbine No. 4
2.	
3.	
4.	
5.	

Manufacturer Information:

Manufacturer?	to be determined (tbd)		
Manufacturer date?	tbd	Installation date?	tbd
Manufacturer's designed control efficiency?	tbd	%	

Miscellaneous Control Device Operation and Maintenance:

Pressure drop across control unit?	n/a	Inches water (minimum)	n/a	inches water (maximum)
Inlet Temperature?	tbd	Fahrenheit (minimum)	tbd	Fahrenheit (maximum)
Outlet Temperature?	n/a	Fahrenheit (minimum)	n/a	Fahrenheit (maximum)

Describe maintenance of control unit (use of visual inspections, maintenance schedule, etc.):

to be determined

Stack Information: If this application is a renewal, contact the air program. We may have this information.

X- Coordinate or Easting: [1]		feet	or	686,962.88	meters
Y- Coordinate or Northing: [1]		feet	or	4,741,885.50	meters
Base Elevation of Stack: [1]	1,220.00	feet	or		meters
Stack Height:	200.00	feet	or		meters
Exit Stack Diameter	13.40	feet	or		meters
Exit Stack Temperature	275.00	degrees Fahrenheit			

Exit Stack Velocity and/or Flow Rate:

Velocity:	75.00	feet per second		meters per second

and/or

Flow Rate:		actual cubic feet per minute		actual cubic meters per second

[1] - Portable asphalt plants, rock crushers, or concrete plants do not have to provide the requested information in these categories.

South Dakota Department of Environment & Natural Resources
Protecting SD's Tomorrow...Today

Air Quality Permit Application Form

Boiler Turbine or Furnace

This form is to be submitted, if necessary, along with the Title V (Part 70) Operating Permit or Minor Operating Permit.

(please complete shaded areas)

1. Facility identification (i.e., Boiler #1, Unit #1, etc): Combined Cycle Gas Turbine No. 5
2. Manufacturer: to be determined Manufacture date: n/a
3. Model number: to be determined
4. Type (i.e., steam boiler, simple cycle combustion turbine, generator, etc.)

combined cycle gas turbine

5. Maximum designed operating rate (name plate):

	1,677.4	million Btus per hour heat input	
or		horsepower with boiler efficiency:	
or		kilowatts with boiler efficiency:	

6. Check the appropriate box(es) for primary and secondary fuels:

✔	Natural gas			☐	Propane
✔	Distillate oil	Sulfur content	0.0015	Weight percent	
☐	Residual oil	Sulfur content		Weight percent	
☐	Bituminous Coal	☐	Subbituminous Coal	☐	Lignite Coal
Coal sulfur content		Weight percent	Coal ash content		Weight percent
✔	Other (please specify)	syngas			

7. Has a stack test been conducted (check appropriate box)? ☐ Yes ✔ No

If a stack test has been conducted, please attach a copy of the most recent stack test report to this application. If the Department already has a copy of the most recent stack test, please specify the date of most recent stack test.

Date of most recent stack test:

Control Equipment: If applicable, types of air pollution control equipment (Examples: baghouse, cyclone, wet scrubber, electrostatic precipitator, thermal oxidizer, miscellaneous control device, etc.).

SCR and oxidation catalyst systems

Please complete the appropriate air quality permit application form for each type of control equipment that controls air emissions from this operation.

Stack Information: If this application is a renewal, contact the air program. We may have this information.

X- Coordinate or Easting:		feet		meters
Y- Coordinate or Northing:		feet		meters
Base Elevation of Stack:		feet		meters
Stack Height:		feet		meters
Exit Stack Diameter		feet		meters
Exit Stack Temperature		degrees Fahrenheit		

Exit Stack Velocity and/or Flow Rate:

Velocity:		feet per second		meters per second

and/or

Flow Rate:		actual cubic feet per minute		actual cubic meters per second

Combined Cycle Gas Turbine No. 5 exhausts to atmosphere through oxidation catalyst and SCR systems. See attached E1639V1 forms for stack parameters.

Air Quality Permit Application Form

Miscellaneous Control Device

This form is to be submitted, if necessary, along with the Title V (Part 70) Operating Permit, Minor Operating Permit, or the General Permits.

(please complete shaded areas)

Describe the miscellaneous control device and how it works:

Flue gas passes through a catalytic reactor, where the catalyst promotes oxidation reactions that convert CO and VOC to carbon dioxide and water.

Equipment and processes served by this baghouse (please list all equipment and processes):

	Equipment and Processes
1.	Combined Cycle Gas Turbine No. 5
2.	
3.	
4.	
5.	

Manufacturer Information:

Manufacturer?	to be determined (tbd)		
Manufacturer date?	tbd	Installation date?	tbd
Manufacturer's designed control efficiency?	tbd	%	

Miscellaneous Control Device Operation and Maintenance:

Pressure drop across control unit?	n/a	Inches water (minimum)	n/a	inches water (maximum)
Inlet Temperature?	tbd	Fahrenheit (minimum)	tbd	Fahrenheit (maximum)
Outlet Temperature?	n/a	Fahrenheit (minimum)	n/a	Fahrenheit (maximum)

Describe maintenance of control unit (use of visual inspections, maintenance schedule, etc.):

to be determined

Stack Information: If this application is a renewal, contact the air program. We may have this information.

X- Coordinate or Easting: [1]		feet	or	686,992.00	meters
Y- Coordinate or Northing: [1]		feet	or	4,741,885.50	meters
Base Elevation of Stack: [1]	1,220.00	feet	or		meters
Stack Height:	200.00	feet	or		meters
Exit Stack Diameter	13.40	feet	or		meters
Exit Stack Temperature	275.00	degrees Fahrenheit			

Exit Stack Velocity and/or Flow Rate:

Velocity:	75.00	feet per second		meters per second

and/or

Flow Rate:		actual cubic feet per minute		actual cubic meters per second

[1] - Portable asphalt plants, rock crushers, or concrete plants do not have to provide the requested information in these categories.

SD EForm - 1639 V1

Air Quality Permit Application Form

Miscellaneous Control Device

This form is to be submitted, if necessary, along with the Title V (Part 70) Operating Permit, Minor Operating Permit, or the General Permits.

(please complete shaded areas)

Describe the miscellaneous control device and how it works:

Ammonia is injected into the flue gas upstream of a catalytic reactor, where the catalyst promotes a reduction reaction that converts NOx to molecular nitrogen.

Equipment and processes served by this baghouse (please list all equipment and processes):

	Equipment and Processes
1.	Combined Cycle Gas Turbine No. 5
2.	
3.	
4.	
5.	

Manufacturer Information:

Manufacturer?	to be determined (tbd)		
Manufacturer date?	tbd	Installation date?	tbd
Manufacturer's designed control efficiency?	tbd	%	

Miscellaneous Control Device Operation and Maintenance:

Pressure drop across control unit?	n/a	Inches water (minimum)	n/a	inches water (maximum)
Inlet Temperature?	tbd	Fahrenheit (minimum)	tbd	Fahrenheit (maximum)
Outlet Temperature?	n/a	Fahrenheit (minimum)	n/a	Fahrenheit (maximum)

Describe maintenance of control unit (use of visual inspections, maintenance schedule, etc.):

to be determined

Stack Information: If this application is a renewal, contact the air program. We may have this information.

X- Coordinate or Easting: [1]		feet	or	686,992.00	meters
Y- Coordinate or Northing: [1]		feet	or	4,741,885.50	meters
Base Elevation of Stack: [1]	1,220.00	feet	or		meters
Stack Height:	200.00	feet	or		meters
Exit Stack Diameter	13.40	feet	or		meters
Exit Stack Temperature	275.00	degrees Fahrenheit			

Exit Stack Velocity and/or Flow Rate:

Velocity:	75.00	feet per second		meters per second

and/or

Flow Rate:		actual cubic feet per minute		actual cubic meters per second

[1] - Portable asphalt plants, rock crushers, or concrete plants do not have to provide the requested information in these categories.

South Dakota Department of Environment & Natural Resources
Protecting SD's Tomorrow...Today

Air Quality Permit Application Form

Boiler Turbine or Furnace

This form is to be submitted, if necessary, along with the Title V (Part 70) Operating Permit or Minor Operating Permit.
(please complete shaded areas)

1. Facility identification (i.e., Boiler #1, Unit #1, etc): Emergency Generator No. 1
2. Manufacturer: to be determined | Manufacture date: n/a
3. Model number: to be determined
4. Type (i.e., steam boiler, simple cycle combustion turbine, generator, etc.)

stationary, reciprocating, compression ignition engine

5. Maximum designed operating rate (name plate):

		million Btus per hour heat input	
or		horsepower with boiler efficiency:	
or	600.00	kilowatts with boiler efficiency:	

6. Check the appropriate box(es) for primary and secondary fuels:

☐	Natural gas		☐	Propane	
☑	Distillate oil	Sulfur content	0.0015	Weight percent	
☐	Residual oil	Sulfur content		Weight percent	
☐	Bituminous Coal	☐	Subbituminous Coal	☐	Lignite Coal
Coal sulfur content		Weight percent	Coal ash content		Weight percent
☐	Other (please specify)				

7. Has a stack test been conducted (check appropriate box)? ☐ Yes ☑ No

If a stack test has been conducted, please attach a copy of the most recent stack test report to this application. If the Department already has a copy of the most recent stack test, please specify the date of most recent stack test.

Date of most recent stack test:

Control Equipment: If applicable, types of air pollution control equipment (Examples: baghouse, cyclone, wet scrubber, electrostatic precipitator, thermal oxidizer, miscellaneous control device, etc.).

n/a

Please complete the appropriate air quality permit application form for each type of control equipment that controls air emissions from this operation.

Stack Information: If this application is a renewal, contact the air program. We may have this information.

X- Coordinate or Easting:		feet	687,063.00	meters
Y- Coordinate or Northing:		feet	4,742,365.00	meters
Base Elevation of Stack:	1,220.00	feet		meters
Stack Height:	25.00	feet		meters
Exit Stack Diameter	1.00	feet		meters
Exit Stack Temperature	950.00	degrees Fahrenheit		

Exit Stack Velocity and/or Flow Rate:

Velocity:	109.00	feet per second		meters per second

and/or

Flow Rate:		actual cubic feet per minute		actual cubic meters per second

South Dakota Department of Environment & Natural Resources
Protecting SD's Tomorrow...Today

Air Quality Permit Application Form

Boiler Turbine or Furnace

This form is to be submitted, if necessary, along with the Title V (Part 70) Operating Permit or Minor Operating Permit.
(please complete shaded areas)

1. Facility identification (i.e., Boiler #1, Unit #1, etc): Emergency Generator No. 2
2. Manufacturer: to be determined | Manufacture date: n/a
3. Model number: to be determined
4. Type (i.e., steam boiler, simple cycle combustion turbine, generator, etc.)

stationary, reciprocating, compression ignition engine

5. Maximum designed operating rate (name plate):

		million Btus per hour heat input	
or		horsepower with boiler efficiency:	
or	600.00	kilowatts with boiler efficiency:	

6. Check the appropriate box(es) for primary and secondary fuels:

☐	Natural gas		☐	Propane	
☑	Distillate oil	Sulfur content	0.0015	Weight percent	
☐	Residual oil	Sulfur content		Weight percent	
☐	Bituminous Coal	☐	Subbituminous Coal	☐	Lignite Coal
Coal sulfur content		Weight percent	Coal ash content		Weight percent
☐	Other (please specify)				

7. Has a stack test been conducted (check appropriate box)? ☐ Yes ☑ No

If a stack test has been conducted, please attach a copy of the most recent stack test report to this application. If the Department already has a copy of the most recent stack test, please specify the date of most recent stack test.

Date of most recent stack test:

Control Equipment: If applicable, types of air pollution control equipment (Examples: baghouse, cyclone, wet scrubber, electrostatic precipitator, thermal oxidizer, miscellaneous control device, etc.).

n/a

Please complete the appropriate air quality permit application form for each type of control equipment that controls air emissions from this operation.

Stack Information: If this application is a renewal, contact the air program. We may have this information.

X- Coordinate or Easting:		feet	687,088.00	meters
Y- Coordinate or Northing:		feet	4,742,365.00	meters
Base Elevation of Stack:	1,220.00	feet		meters
Stack Height:	25.00	feet		meters
Exit Stack Diameter	1.00	feet		meters
Exit Stack Temperature	950.00	degrees Fahrenheit		

Exit Stack Velocity and/or Flow Rate:

Velocity:	109.00	feet per second		meters per second

and/or

Flow Rate:		actual cubic feet per minute		actual cubic meters per second

South Dakota Department of Environment & Natural Resources
Protecting SD's Tomorrow...Today

Air Quality Permit Application Form

Boiler Turbine or Furnace

This form is to be submitted, if necessary, along with the Title V (Part 70) Operating Permit or Minor Operating Permit.
(please complete shaded areas)

1. Facility identification (i.e., Boiler #1, Unit #1, etc): Emergency Generator No. 3
2. Manufacturer: to be determined | Manufacture date: n/a
3. Model number: to be determined
4. Type (i.e., steam boiler, simple cycle combustion turbine, generator, etc.)

stationary, reciprocating, compression ignition engine

5. Maximum designed operating rate (name plate):

		million Btus per hour heat input	
or		horsepower with boiler efficiency:	
or	600.00	kilowatts with boiler efficiency:	

6. Check the appropriate box(es) for primary and secondary fuels:

☐	Natural gas		☐	Propane	
☑	Distillate oil	Sulfur content	0.0015	Weight percent	
☐	Residual oil	Sulfur content		Weight percent	
☐	Bituminous Coal	☐	Subbituminous Coal	☐	Lignite Coal
Coal sulfur content		Weight percent	Coal ash content		Weight percent
☐	Other (please specify)				

7. Has a stack test been conducted (check appropriate box)? ☐ Yes ☑ No

If a stack test has been conducted, please attach a copy of the most recent stack test report to this application. If the Department already has a copy of the most recent stack test, please specify the date of most recent stack test.

Date of most recent stack test:

Control Equipment: If applicable, types of air pollution control equipment (Examples: baghouse, cyclone, wet scrubber, electrostatic precipitator, thermal oxidizer, miscellaneous control device, etc.).

n/a

Please complete the appropriate air quality permit application form for each type of control equipment that controls air emissions from this operation.

Stack Information: If this application is a renewal, contact the air program. We may have this information.

X- Coordinate or Easting:		feet	687,113.00	meters
Y- Coordinate or Northing:		feet	4,742,365.00	meters
Base Elevation of Stack:	1,220.00	feet		meters
Stack Height:	25.00	feet		meters
Exit Stack Diameter	1.00	feet		meters
Exit Stack Temperature	950.00	degrees Fahrenheit		

Exit Stack Velocity and/or Flow Rate:

Velocity:	109.00	feet per second		meters per second

and/or

Flow Rate:		actual cubic feet per minute		actual cubic meters per second

South Dakota Department of Environment & Natural Resources
Protecting SD's Tomorrow...Today

Air Quality Permit Application Form

Boiler Turbine or Furnace

This form is to be submitted, if necessary, along with the Title V (Part 70) Operating Permit or Minor Operating Permit.
(please complete shaded areas)

1. Facility identification (i.e., Boiler #1, Unit #1, etc): Emergency Generator No. 4
2. Manufacturer: to be determined | Manufacture date: n/a
3. Model number: to be determined
4. Type (i.e., steam boiler, simple cycle combustion turbine, generator, etc.)

stationary, reciprocating, compression ignition engine

5. Maximum designed operating rate (name plate):

		million Btus per hour heat input	
or		horsepower with boiler efficiency:	
or	600.00	kilowatts with boiler efficiency:	

6. Check the appropriate box(es) for primary and secondary fuels:

☐	Natural gas		☐	Propane	
☑	Distillate oil	Sulfur content	0.0015	Weight percent	
☐	Residual oil	Sulfur content		Weight percent	
☐	Bituminous Coal	☐	Subbituminous Coal	☐	Lignite Coal
Coal sulfur content		Weight percent	Coal ash content		Weight percent
☐	Other (please specify)				

7. Has a stack test been conducted (check appropriate box)? ☐ Yes ☑ No

If a stack test has been conducted, please attach a copy of the most recent stack test report to this application. If the Department already has a copy of the most recent stack test, please specify the date of most recent stack test.

Date of most recent stack test:

Control Equipment: If applicable, types of air pollution control equipment (Examples: baghouse, cyclone, wet scrubber, electrostatic precipitator, thermal oxidizer, miscellaneous control device, etc.).

n/a

Please complete the appropriate air quality permit application form for each type of control equipment that controls air emissions from this operation.

Stack Information: If this application is a renewal, contact the air program. We may have this information.

X- Coordinate or Easting:		feet	687,138.00	meters
Y- Coordinate or Northing:		feet	4,742,365.00	meters
Base Elevation of Stack:	1,220.00	feet		meters
Stack Height:	25.00	feet		meters
Exit Stack Diameter	1.00	feet		meters
Exit Stack Temperature	950.00	degrees Fahrenheit		

Exit Stack Velocity and/or Flow Rate:

Velocity:	109.00	feet per second		meters per second

and/or

Flow Rate:		actual cubic feet per minute		actual cubic meters per second

South Dakota Department of Environment & Natural Resources
Protecting SD's Tomorrow...Today

Air Quality Permit Application Form

Boiler Turbine or Furnace

This form is to be submitted, if necessary, along with the Title V (Part 70) Operating Permit or Minor Operating Permit.
(please complete shaded areas)

1. Facility identification (i.e., Boiler #1, Unit #1, etc): Fire Water Pump No. 1
2. Manufacturer: to be determined — Manufacture date: n/a
3. Model number: to be determined
4. Type (i.e., steam boiler, simple cycle combustion turbine, generator, etc.)

stationary, reciprocating, compression ignition engine

5. Maximum designed operating rate (name plate):

		million Btus per hour heat input	
or		horsepower with boiler efficiency:	
or	2,250.00	kilowatts with boiler efficiency:	

6. Check the appropriate box(es) for primary and secondary fuels:

☐	Natural gas		☐	Propane	
☑	Distillate oil	Sulfur content	0.0015	Weight percent	
☐	Residual oil	Sulfur content		Weight percent	
☐	Bituminous Coal	☐	Subbituminous Coal	☐	Lignite Coal
Coal sulfur content		Weight percent	Coal ash content		Weight percent
☐	Other (please specify)				

7. Has a stack test been conducted (check appropriate box)? ☐ Yes ☑ No

If a stack test has been conducted, please attach a copy of the most recent stack test report to this application. If the Department already has a copy of the most recent stack test, please specify the date of most recent stack test.

Date of most recent stack test:

Control Equipment: If applicable, types of air pollution control equipment (Examples: baghouse, cyclone, wet scrubber, electrostatic precipitator, thermal oxidizer, miscellaneous control device, etc.).

n/a

Please complete the appropriate air quality permit application form for each type of control equipment that controls air emissions from this operation.

Stack Information: If this application is a renewal, contact the air program. We may have this information.

X- Coordinate or Easting:		feet	684,740.00	meters
Y- Coordinate or Northing:		feet	4,741,479.00	meters
Base Elevation of Stack:	1,220.00	feet		meters
Stack Height:	25.00	feet		meters
Exit Stack Diameter	1.00	feet		meters
Exit Stack Temperature	850.00	degrees Fahrenheit		

Exit Stack Velocity and/or Flow Rate:

Velocity:	267.00	feet per second		meters per second

and/or

Flow Rate:		actual cubic feet per minute		actual cubic meters per second

South Dakota Department of Environment & Natural Resources
Protecting SD's Tomorrow...Today

Air Quality Permit Application Form

Boiler Turbine or Furnace

This form is to be submitted, if necessary, along with the Title V (Part 70) Operating Permit or Minor Operating Permit.
(please complete shaded areas)

1. Facility identification (i.e., Boiler #1, Unit #1, etc): Fire Water Pump No. 2
2. Manufacturer: to be determined | Manufacture date: n/a
3. Model number: to be determined
4. Type (i.e., steam boiler, simple cycle combustion turbine, generator, etc.)

stationary, reciprocating, compression ignition engine

5. Maximum designed operating rate (name plate):

		million Btus per hour heat input	
or		horsepower with boiler efficiency:	
or	2,250.00	kilowatts with boiler efficiency:	

6. Check the appropriate box(es) for primary and secondary fuels:

☐	Natural gas		☐	Propane	
☑	Distillate oil	Sulfur content	0.0015	Weight percent	
☐	Residual oil	Sulfur content		Weight percent	
☐	Bituminous Coal	☐	Subbituminous Coal	☐	Lignite Coal
Coal sulfur content		Weight percent	Coal ash content		Weight percent
☐	Other (please specify)				

7. Has a stack test been conducted (check appropriate box)? ☐ Yes ☑ No

If a stack test has been conducted, please attach a copy of the most recent stack test report to this application. If the Department already has a copy of the most recent stack test, please specify the date of most recent stack test.

Date of most recent stack test:

Control Equipment: If applicable, types of air pollution control equipment (Examples: baghouse, cyclone, wet scrubber, electrostatic precipitator, thermal oxidizer, miscellaneous control device, etc.).

n/a

Please complete the appropriate air quality permit application form for each type of control equipment that controls air emissions from this operation.

Stack Information: If this application is a renewal, contact the air program. We may have this information.

X- Coordinate or Easting:		feet	684,770.00	meters
Y- Coordinate or Northing:		feet	4,741,479.00	meters
Base Elevation of Stack:	1,220.00	feet		meters
Stack Height:	25.00	feet		meters
Exit Stack Diameter	1.00	feet		meters
Exit Stack Temperature	850.00	degrees Fahrenheit		

Exit Stack Velocity and/or Flow Rate:

Velocity:	267.00	feet per second		meters per second

and/or

Flow Rate:		actual cubic feet per minute		actual cubic meters per second

Appendix B

Process Flow Diagrams

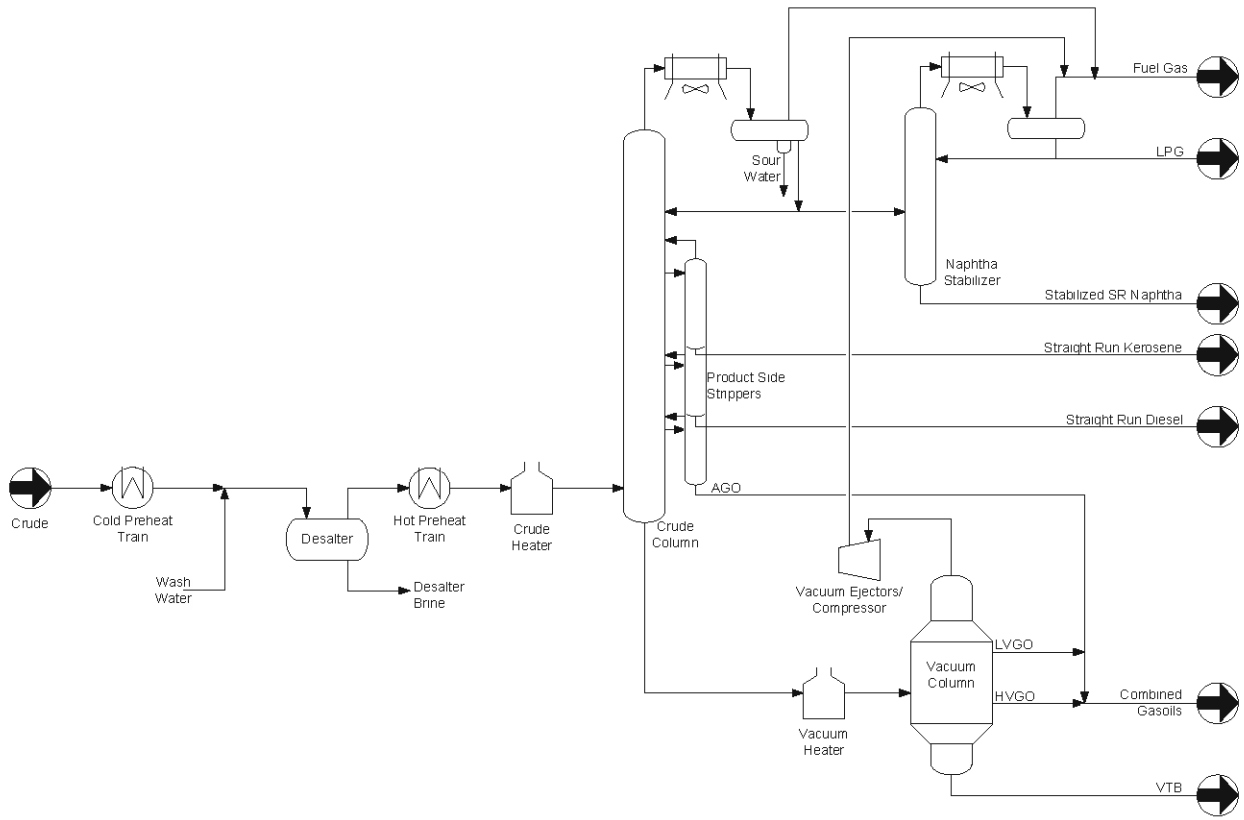

NOTES

1) This sketch shows one crude and vacuum unit The refinery will have two virtually identical crude and vacuum units

Mustang Engineering	Hyperion Resources Galaxy Project			
	Crude and Vacuum Unit			
Mustang Job # 12588	DATE Sep-16-07	BY JMM	DWG NO SK-1	REV A
	SCALE	None	SHEET	1 OF 1

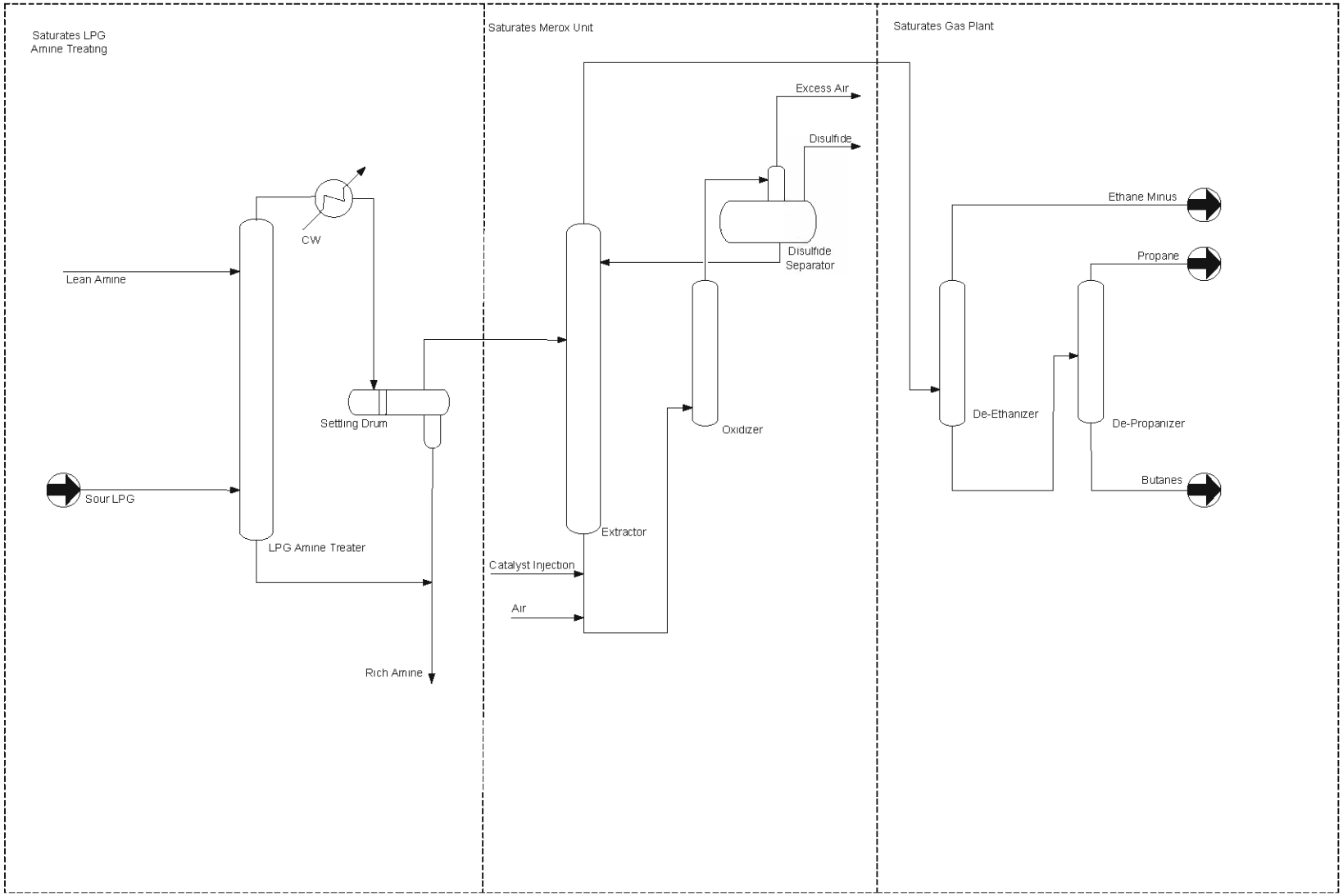

Mustang Engineering	Hyperion Resources Galaxy Project			
	Saturates LPG Amine Treating, Merox and Gas Plant			
Mustang Job # 12588	DATE Sep-16-07	BY ARA	DWG NO SK-2	REV A
	SCALE	None	SHEET	1 OF 1

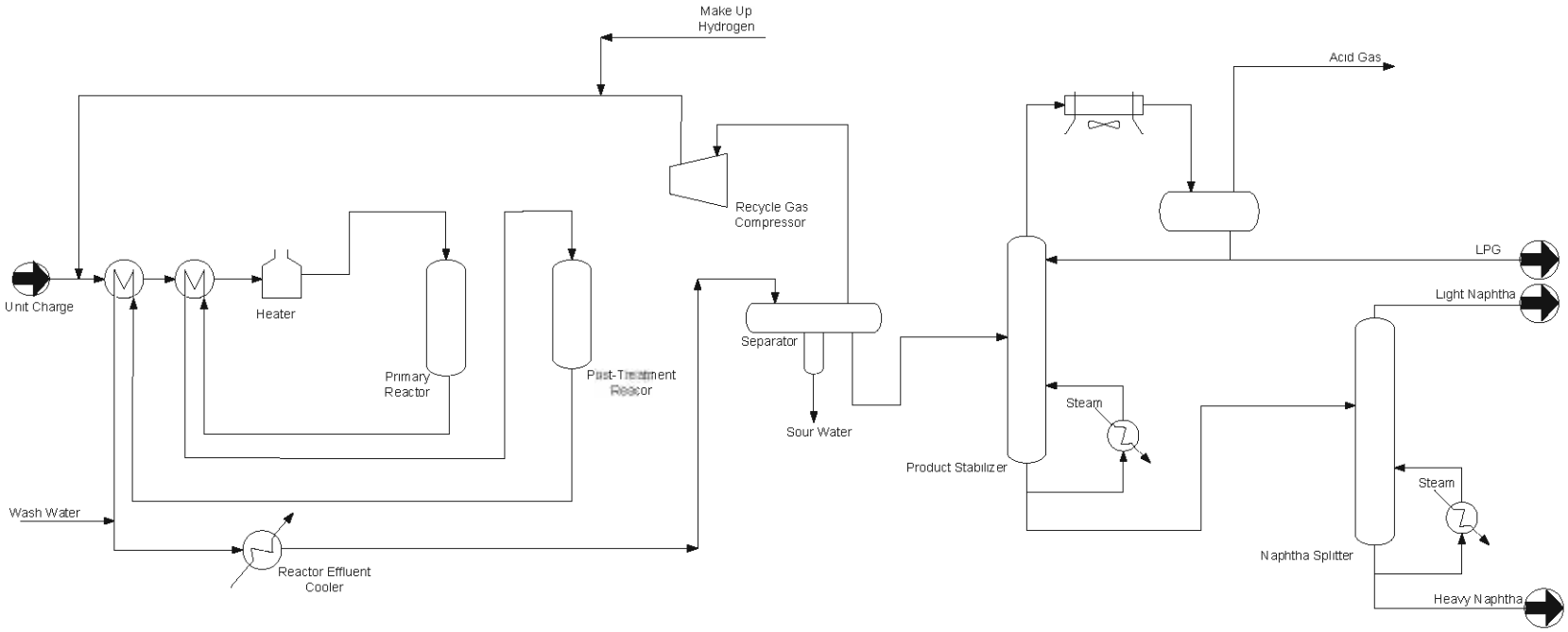

Mustang Engineering	Hyperion Resources Galaxy Project			
	Naphtha Hydrotreater			
Mustang Job # 12588	DATE Sep-16-07	BY ARA	DWG NO SK-3	REV A
	SCALE	None	SHEET	1 OF 1

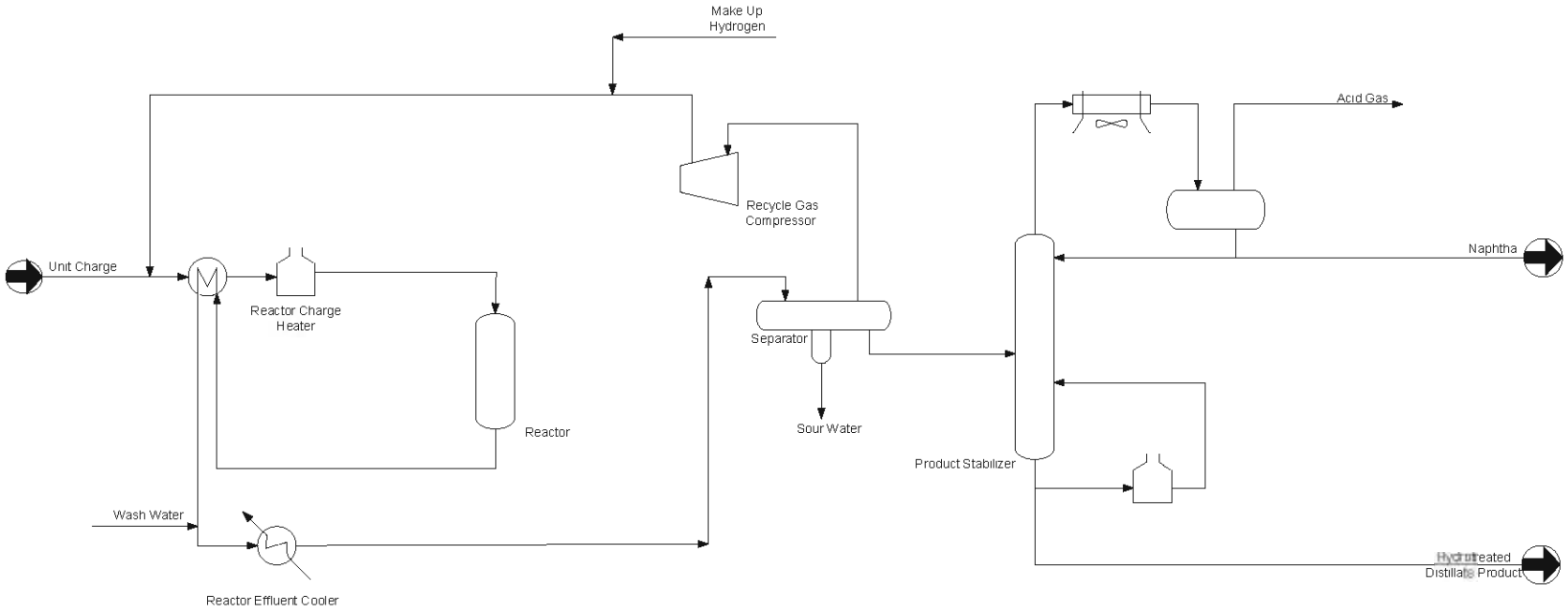

Mustang Engineering	Hyperion Resources Galaxy Project			
	Distillate Hydrotreater			
Mustang Job # 12588	DATE Oct-8-07	BY ARA	DWG NO SK-4	REV B
	SCALE	None	SHEET	1 OF 1

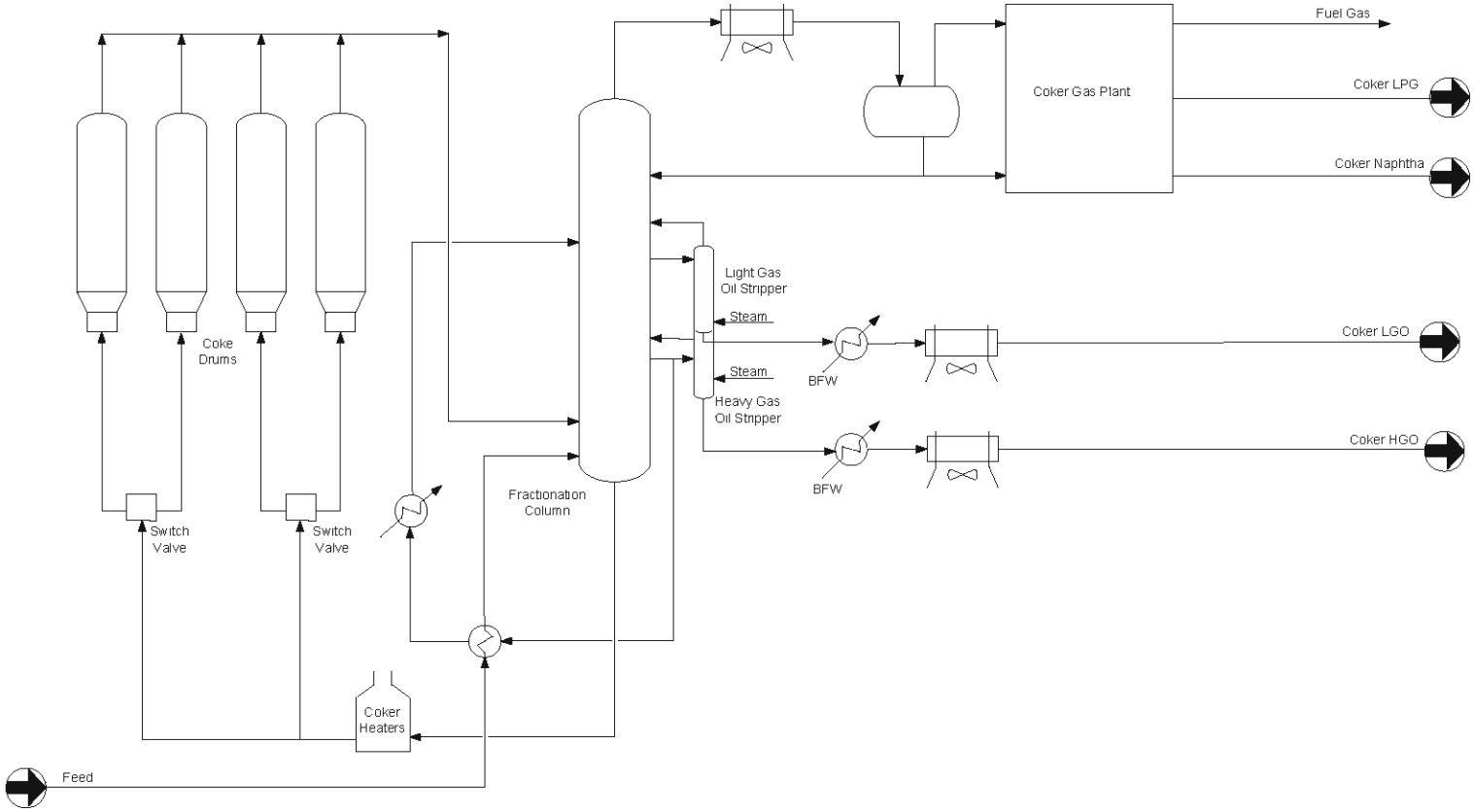

Mustang Engineering	Hyperion Resources Galaxy Project			
	Delayed Coker			
Mustang Job # 12588	DATE Sep-16-07	BY ARA	DWG NO SK-5	REV A
	SCALE	None	SHEET	1 OF 1

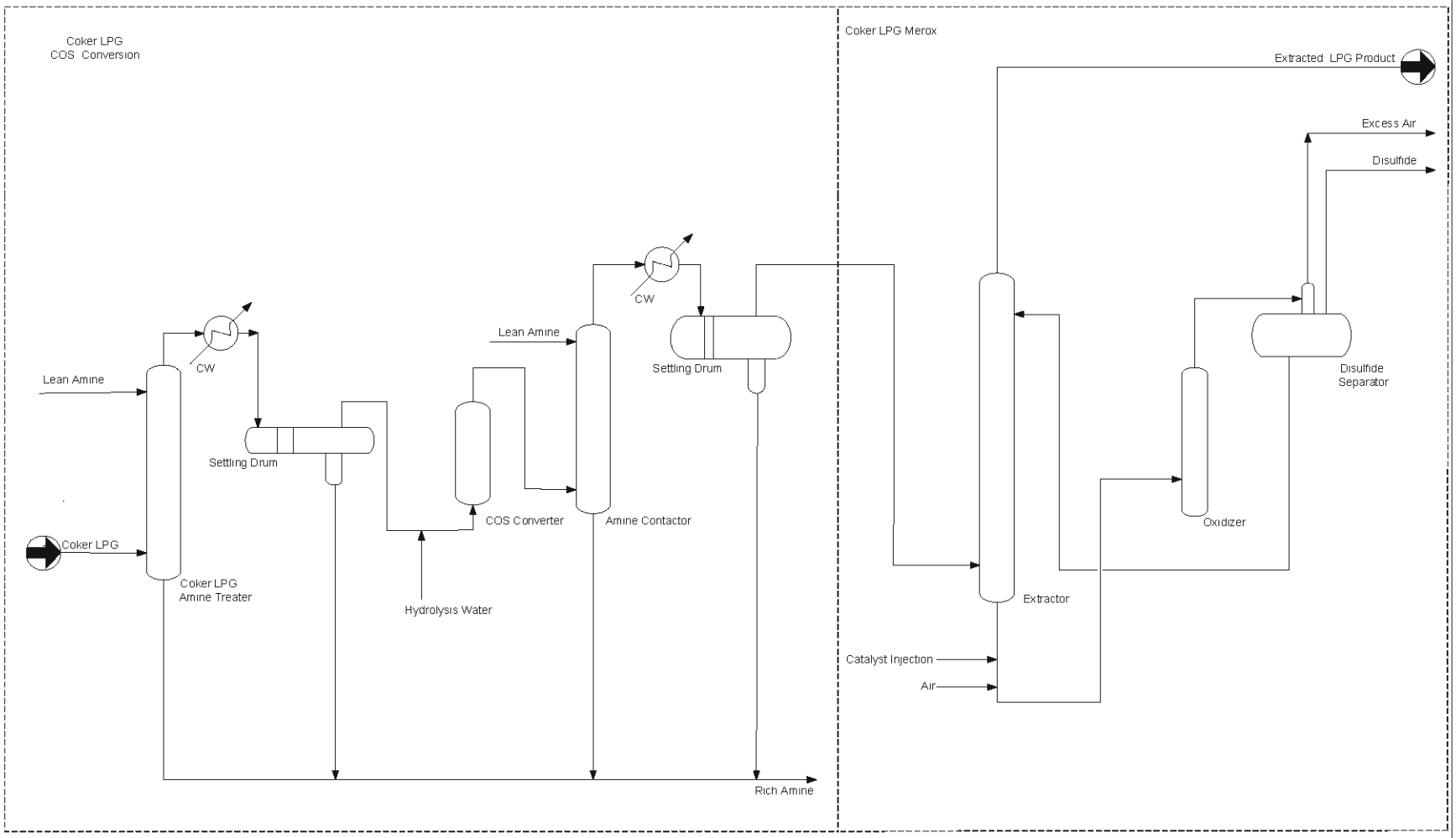

Mustang Engineering	Hyperion Resources Galaxy Project			
	Coker LPG COS Conversion & Merox			
Mustang Job # 12588	DATE Sep-16-07	BY ARA	DWG NO SK-6	REV A
	SCALE	None	SHEET	1 OF 1

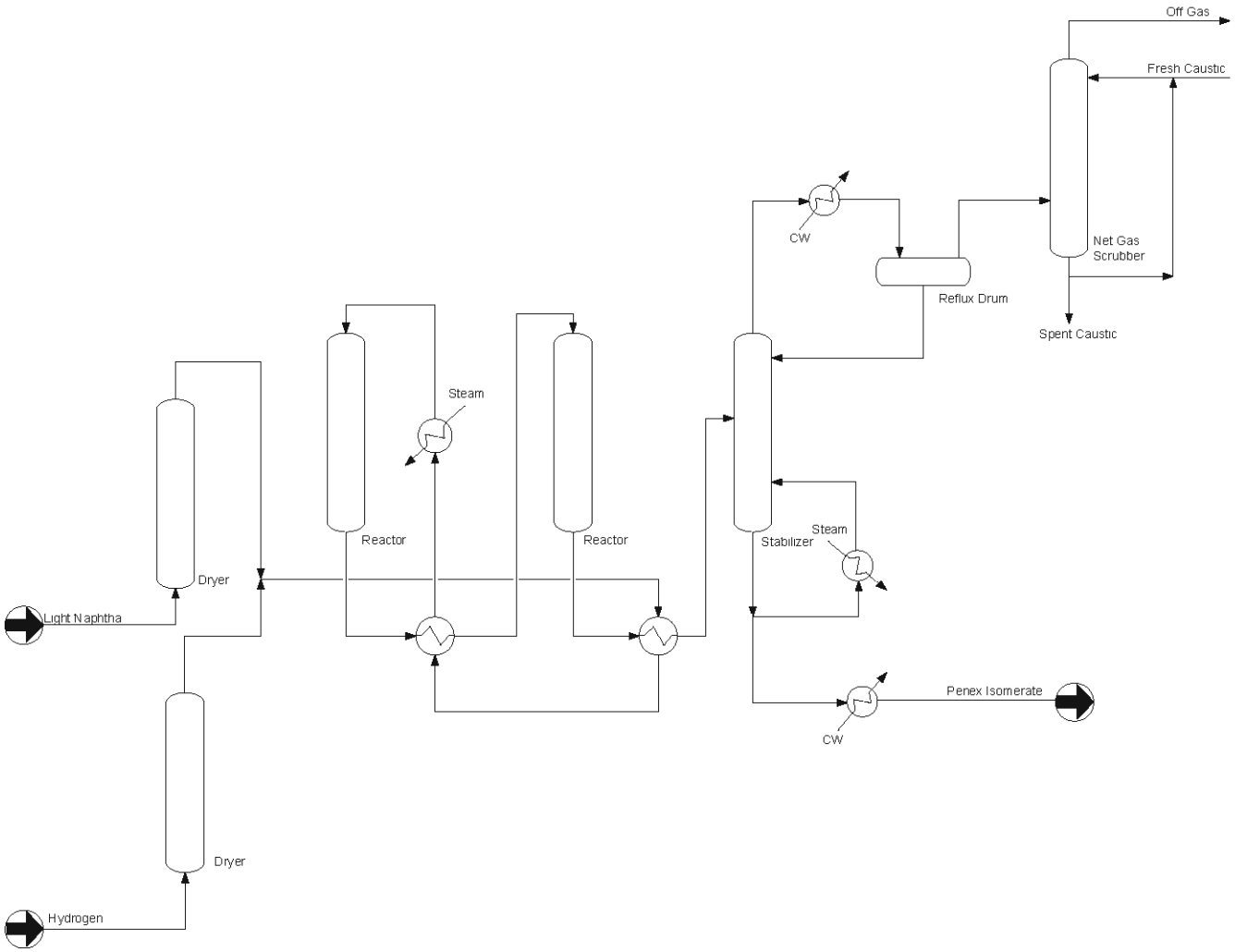

Mustang Engineering	Hyperion Resources Galaxy Project			
	Penex			
Mustang Job # 12588	DATE Sep-16-07	BY ARA	DWG NO SK-7	REV A
	SCALE	None	SHEET	1 OF 1

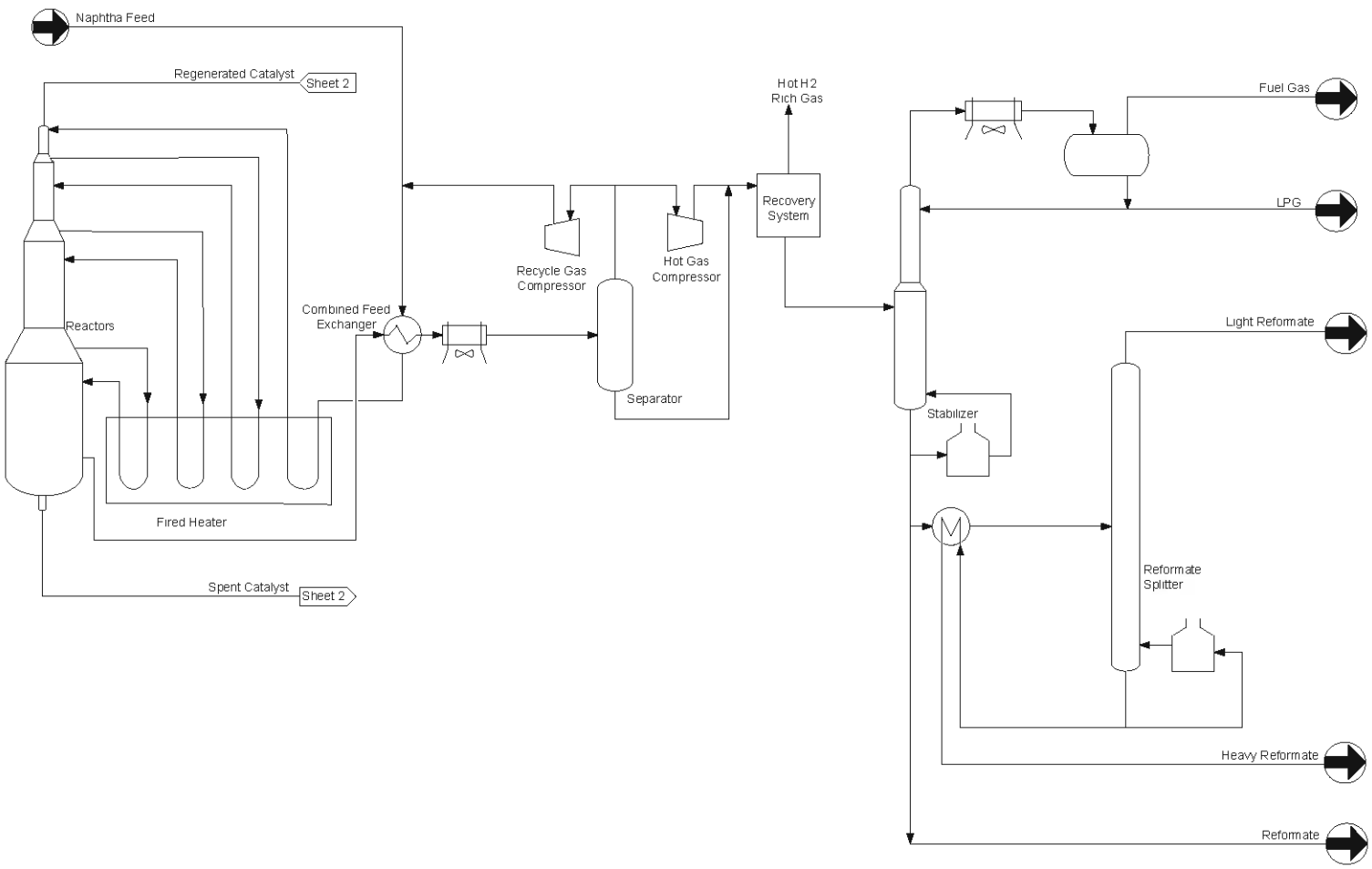

Mustang Engineering	Hyperion Resources Galaxy Project			
	Continuous Catalytic Reformer and Reformate Splitter			
Mustang Job # 12588	DATE Sep-16-07	BY ARA	DWG NO SK-8	REV A
	SCALE	None	SHEET	1 OF 2

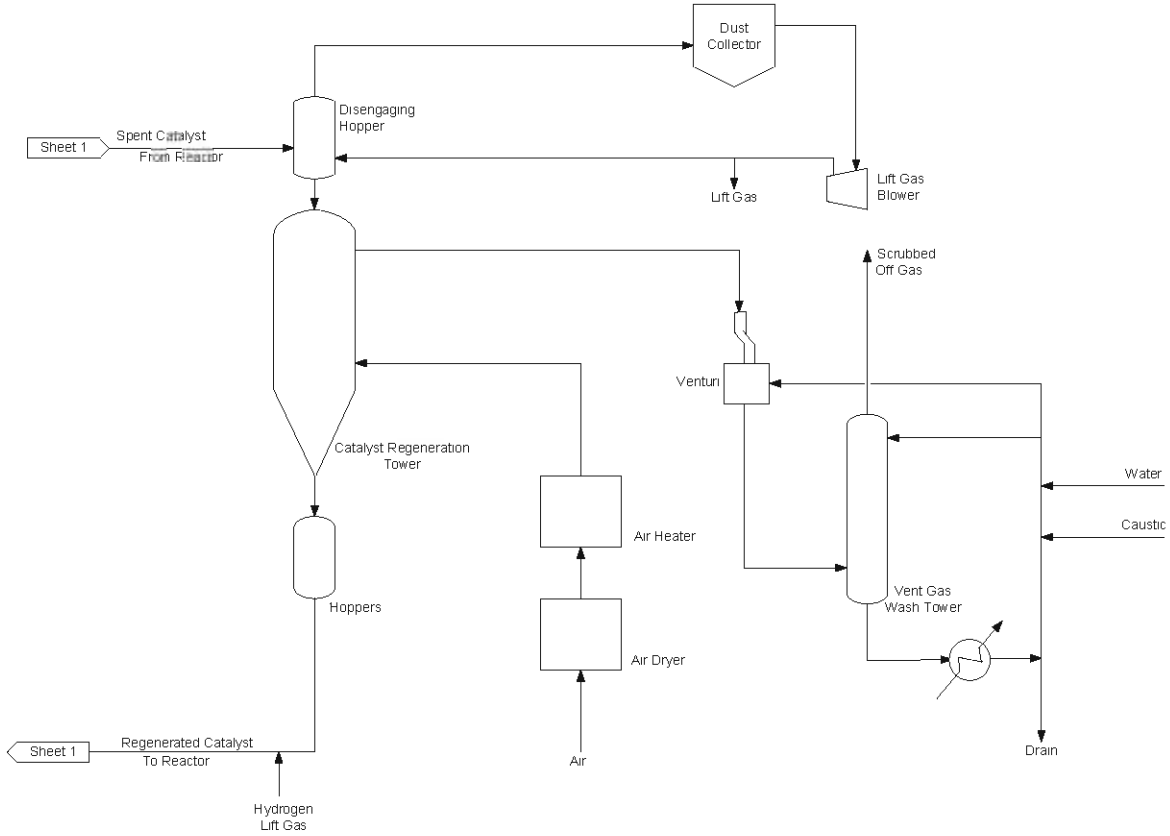

Mustang Engineering	Hyperion Resources Galaxy Project			
	Continuous Catalytic Reformer and Reformate Splitter			
Mustang Job # 12588	DATE Sep-16-07	BY ARA	DWG NO SK-8	REV A
	SCALE	None	SHEET	2 OF 2

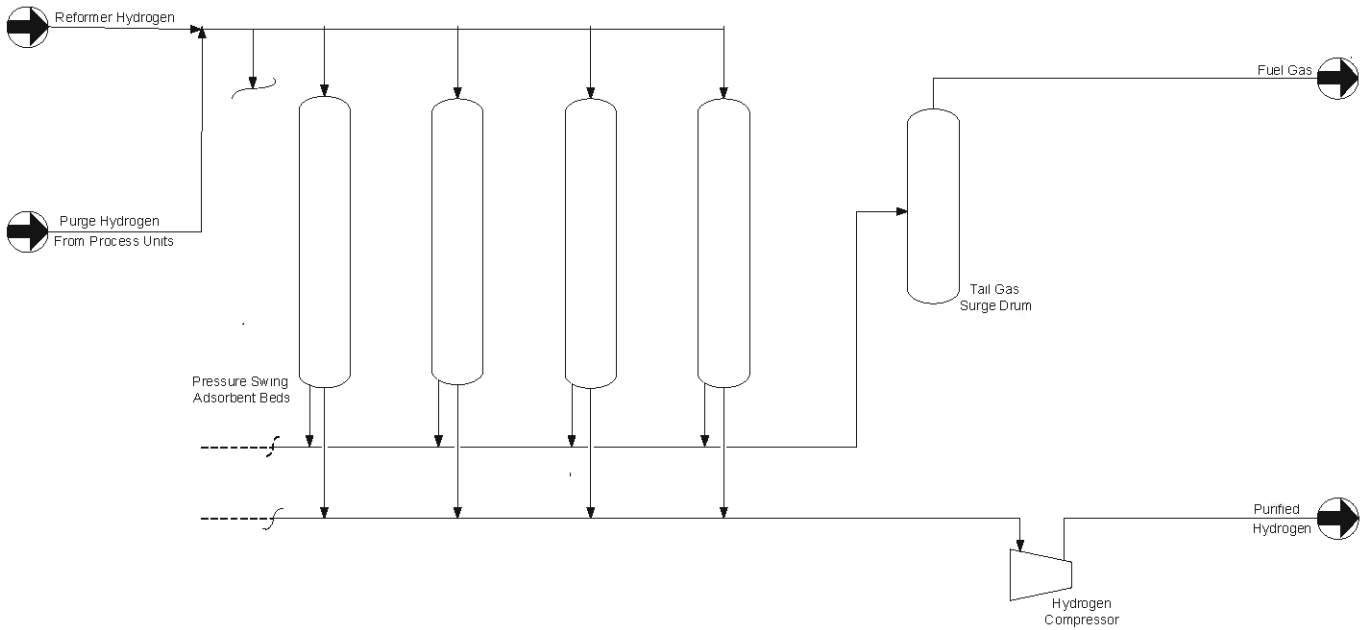

Mustang Engineering	Hyperion Resources Galaxy Project			
	Refinery PSA Unit & Hydrogen Compression			
Mustang Job # 12588	DATE Sep-16-07	BY ARA	DWG NO SK-9	REV A
	SCALE	None	SHEET	1 OF 1

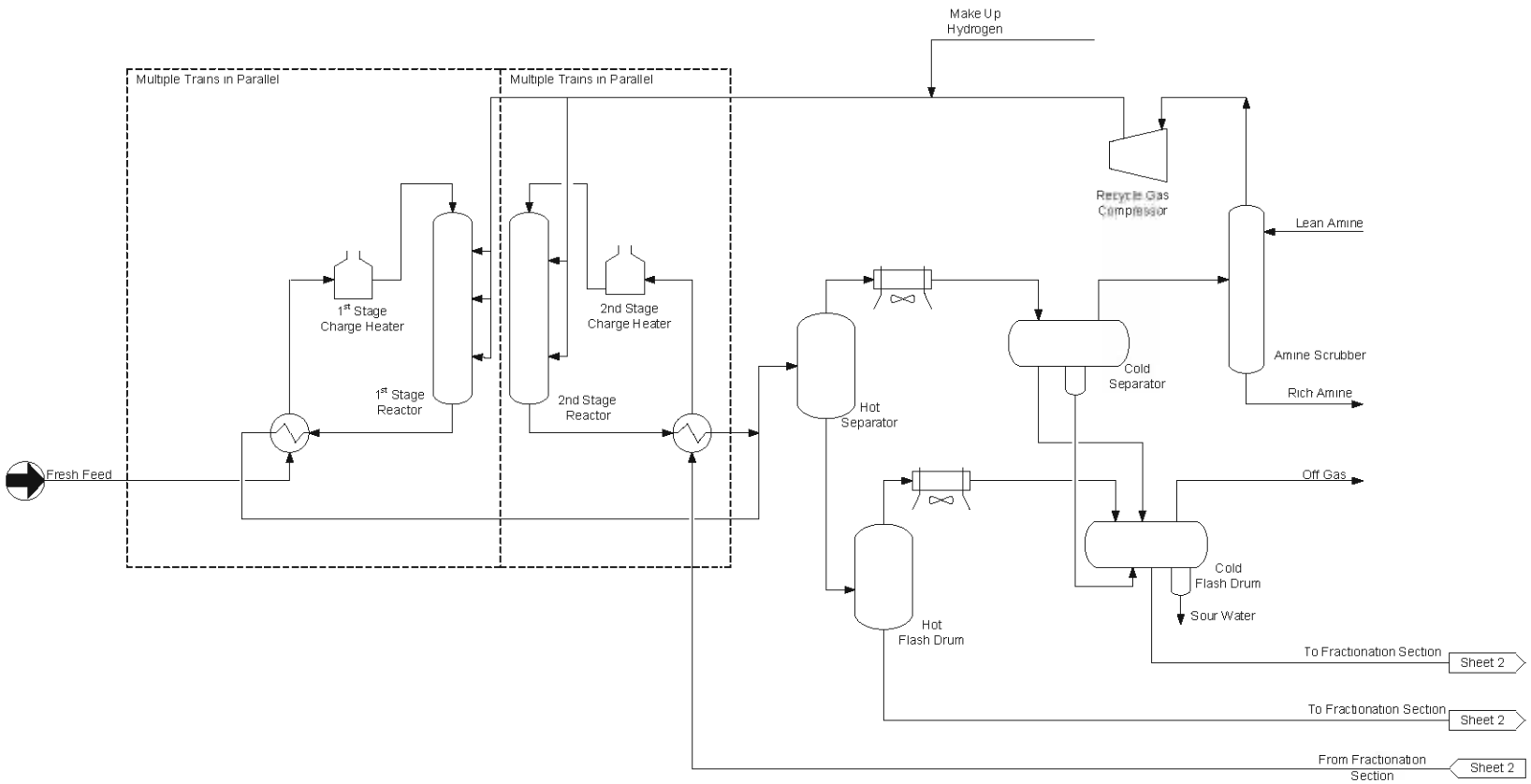

Mustang Engineering	Hyperion Resources Galaxy Project			
	Hydrocracker			
Mustang Job # 12588	DATE Sep-16-07	BY ARA	DWG NO SK-10	REV A
	SCALE	None	SHEET	1 OF 2

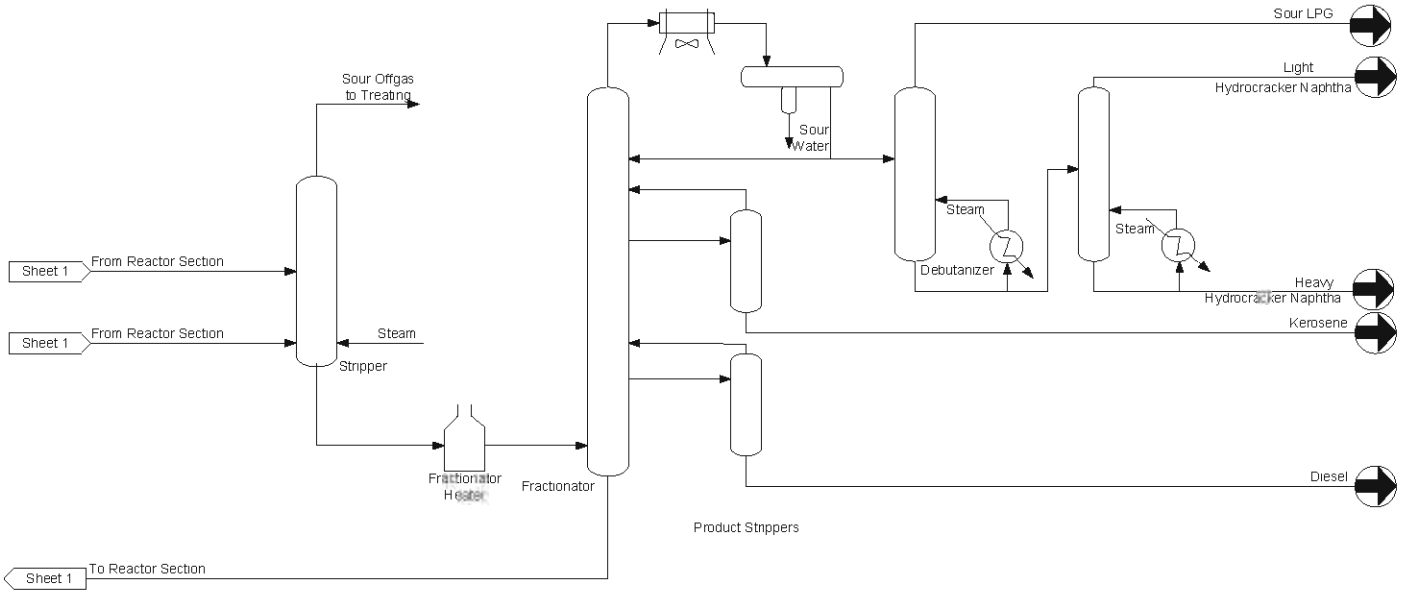

Mustang Engineering	Hyperion Resources Galaxy Project			
	Hydrocracker			
Mustang Job # 12588	DATE Sep-10-07	BY ARA	DWG NO SK-10	REV A
	SCALE	None	SHEET	2 OF 2

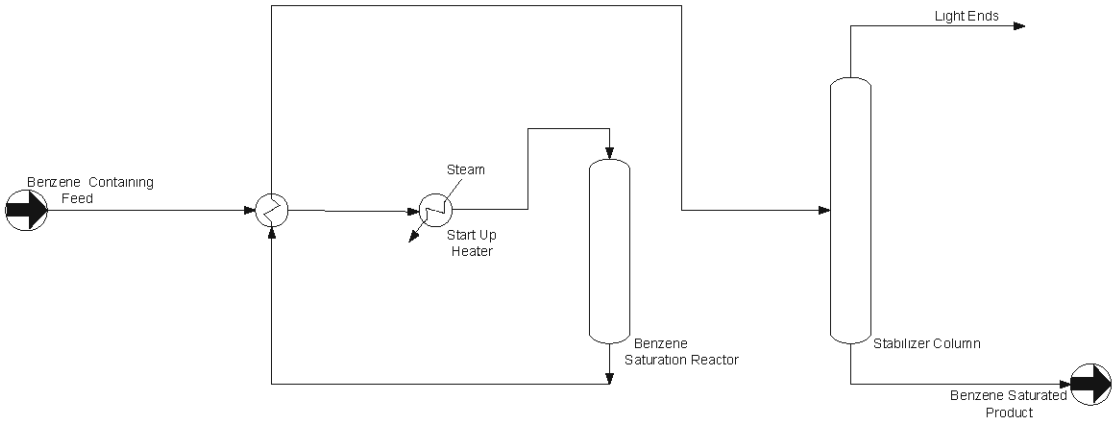

Mustang Engineering	Hyperion Resources Galaxy Project			
	Bensat			
Mustang Job # 12588	DATE Sep-10-07	BY ARA	DWG NO SK-11	REV A
	SCALE	None	SHEET	1 OF 2

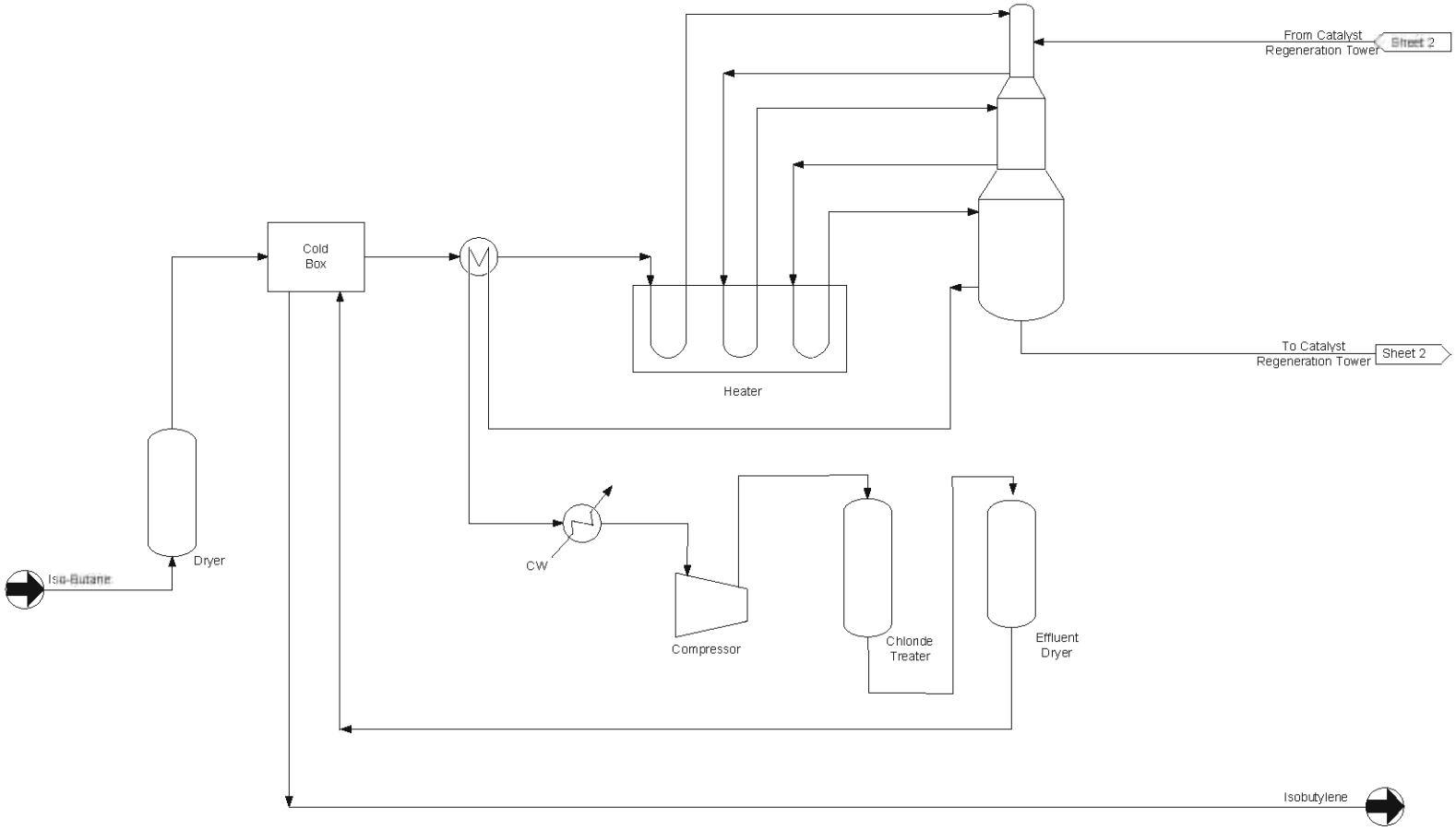

Mustang Engineering	Hyperion Resources Galaxy Project			
	Oleflex Unit			
Mustang Job # 12588	DATE Sep-16-07	BY ARA	DWG NO SK-12	REV A
	SCALE	None	SHEET	1 OF 2

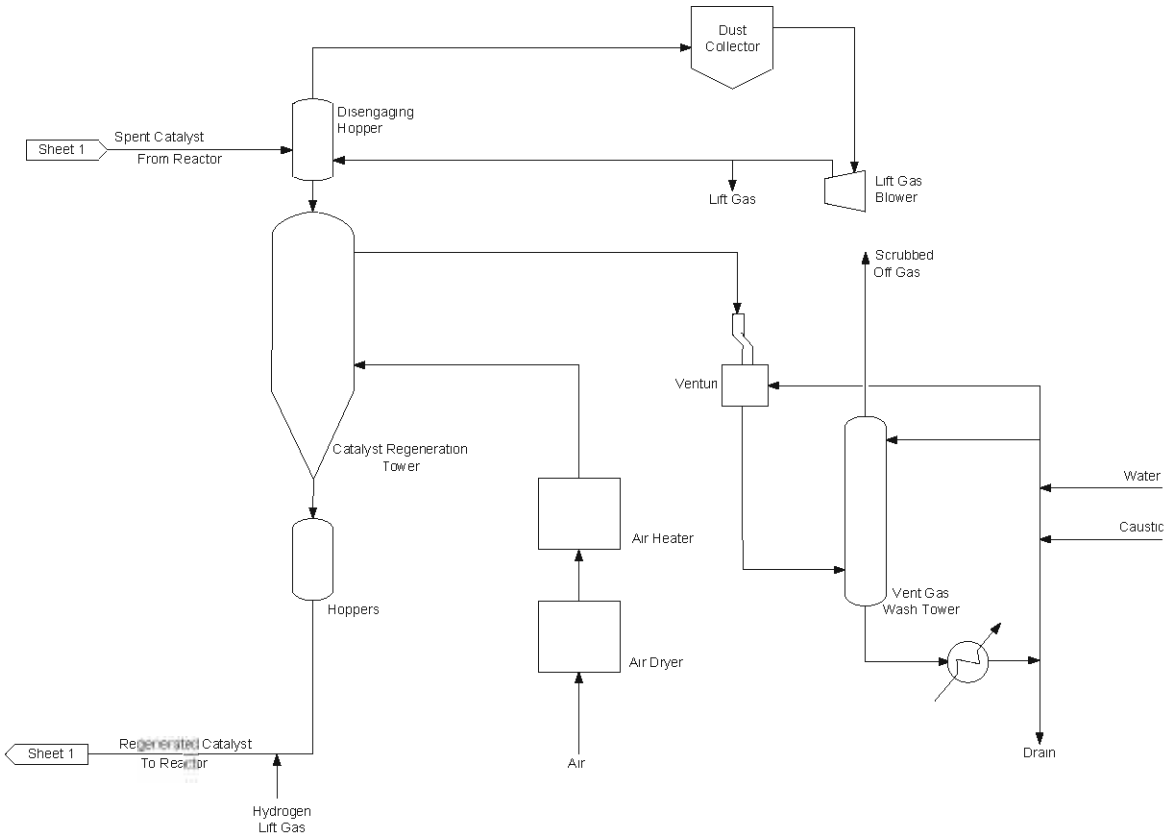

Mustang Engineering	Hyperion Resources Galaxy Project			
	Oleflex Regenerator			
Mustang Job # 12588	DATE Sep-16-07	BY ARA	DWG NO SK-12	REV A
	SCALE	None	SHEET	2 OF 2

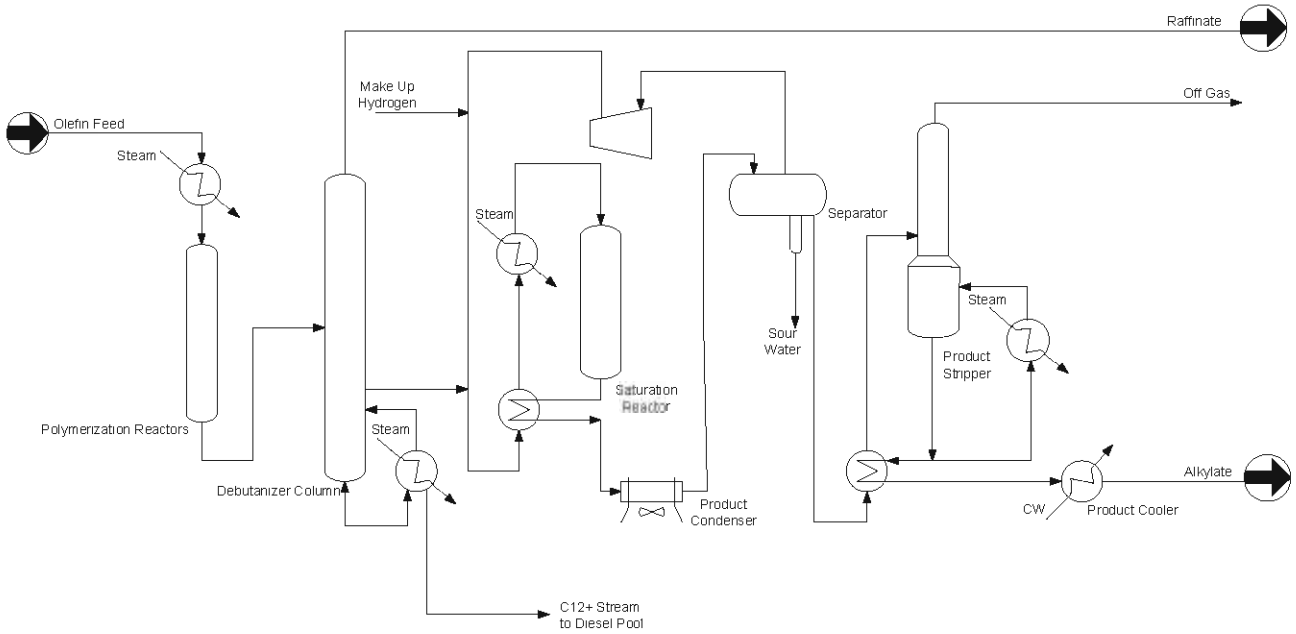

Mustang Engineering	Hyperion Resources Galaxy Project			
	InAlk (Alkylation)			
Mustang Job # 12588	DATE Oct-8-07	BY ARA	DWG NO SK-13	REV B
	SCALE	None	SHEET	1 OF 1

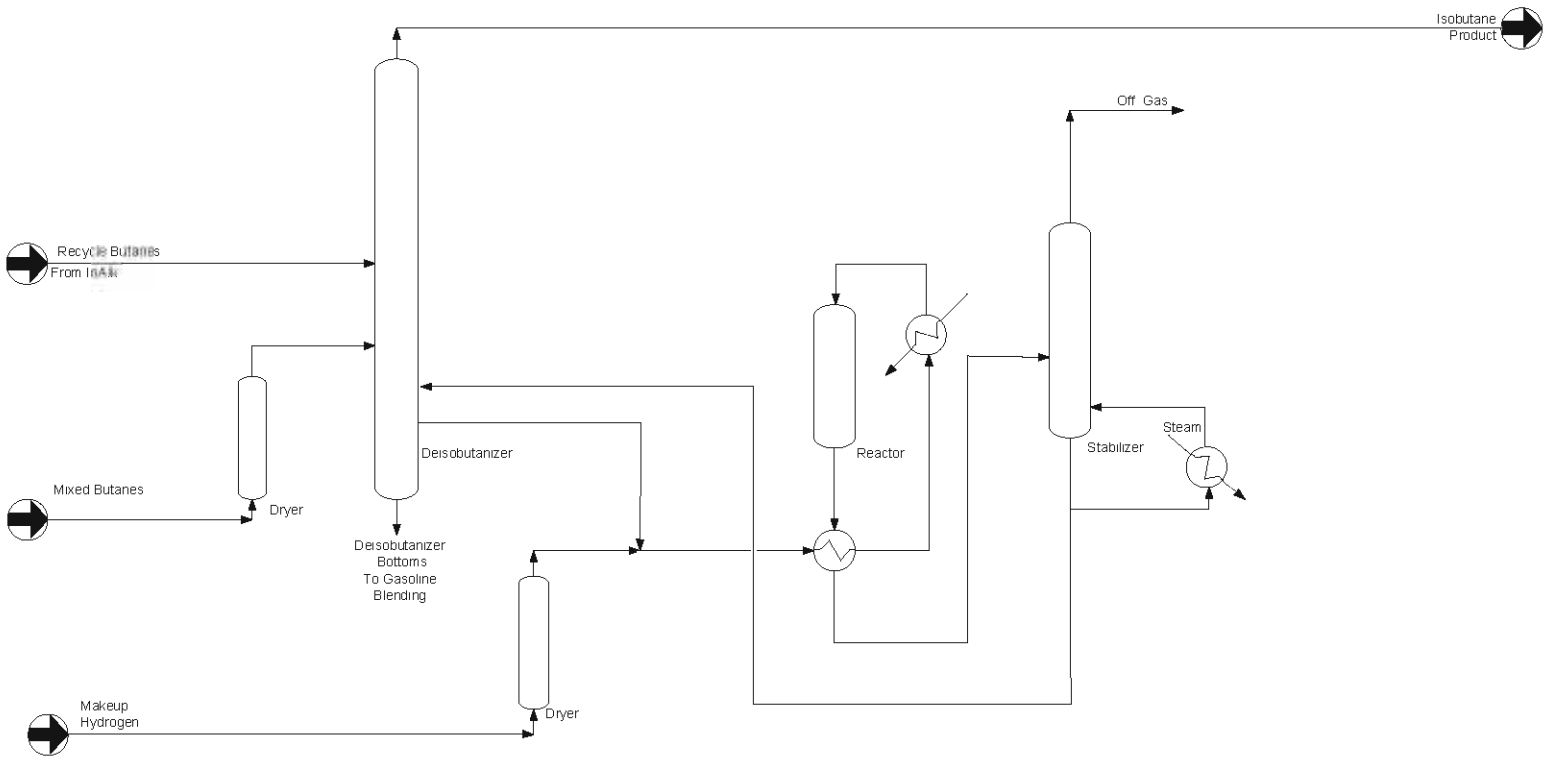

Mustang Engineering	Hyperion Resources Galaxy Project			
	Butamer with Deisobutanizer			
Mustang Job # 12588	DATE Oct-8-07	BY ARA	DWG NO SK-14	REV B
	SCALE	None	SHEET	1 OF 1

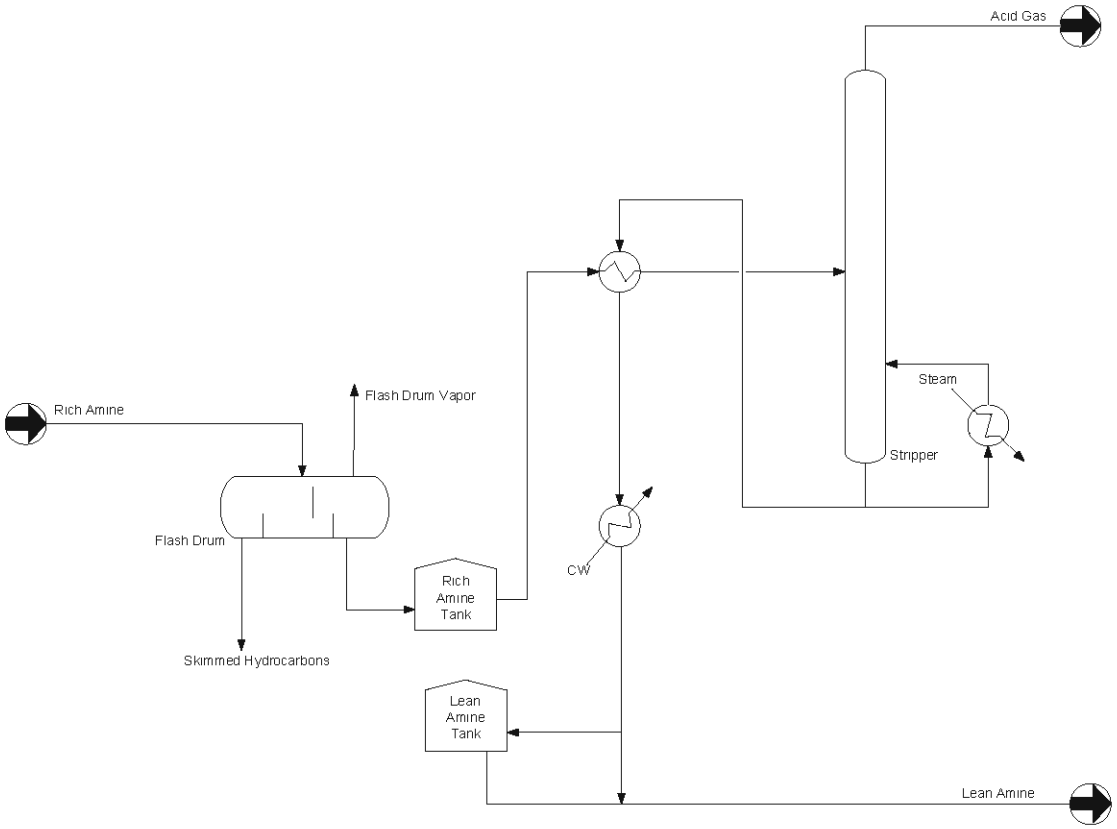

NOTES

1) This sketch shows only one amine regeneration unit. The refinery will have multiple amine regeneration units

Mustang Engineering	Hyperion Resources Galaxy Project			
	Amine Regeneration Unit			
Mustang Job # 12588	DATE Sep-16-07	BY ARA	DWG NO SK-15	REV A
	SCALE	None	SHEET	1 OF 1

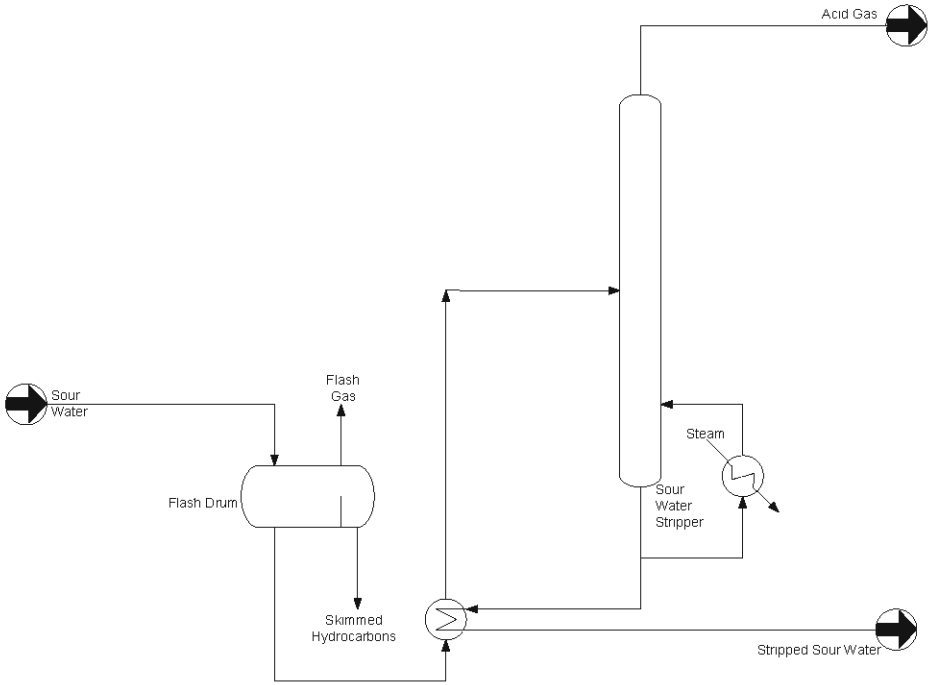

NOTES

1) This sketch shows one sour water stripper unit The refinery will have multiple sour water strippers

Mustang Engineering	Hyperion Resources Galaxy Project			
	Sour Water Stripper			
Mustang Job # 12588	DATE Sep-16-07	BY ARA	DWG NO SK-16	REV A
	SCALE	None	SHEET	1 OF 1

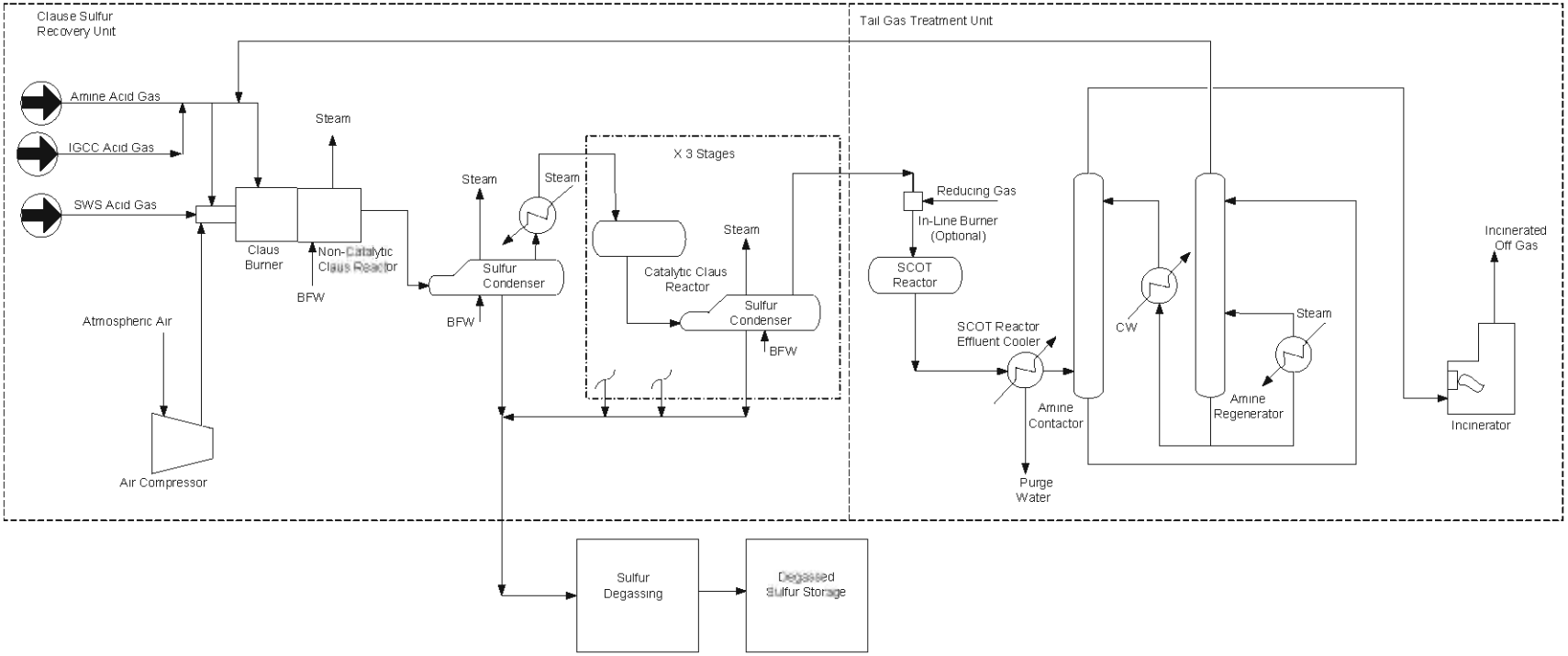

Mustang Engineering	Hyperion Resources Galaxy Project			
	Sulfur Recovery Unit			
Mustang Job # 12588	DATE Oct-8-07	BY ARA	DWG NO SK-17	REV B
	SCALE None		SHEET 1 OF 1	

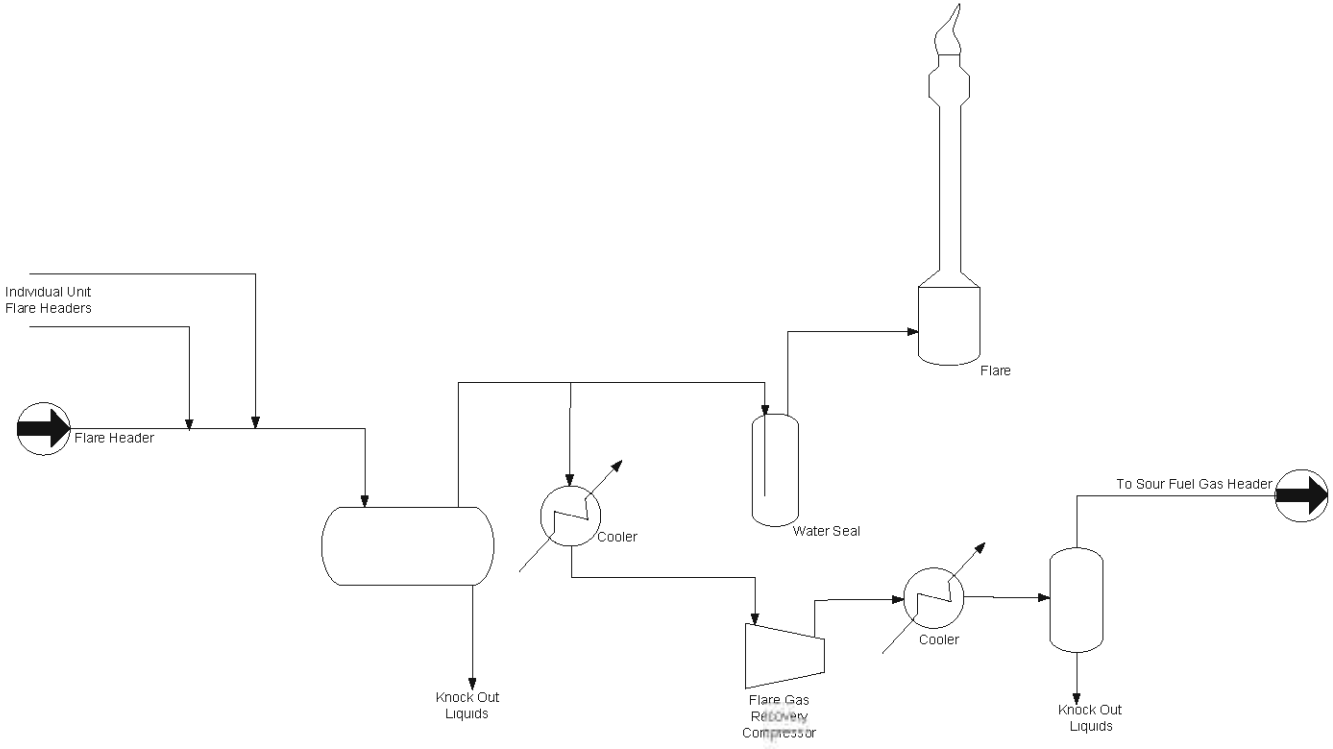

Note
1) This sketch shows one flare and flare gas recovery unit. The refinery will have multiple units in parallel

Mustang Engineering	Hyperion Resources Galaxy Project			
	Flare & Flare Gas Recovery			
Mustang Job # 12588	SIZE Sep-16-07	BY ARA	DWG NO SK-18	REV A
	SCALE	None	SHEET	1 OF 1

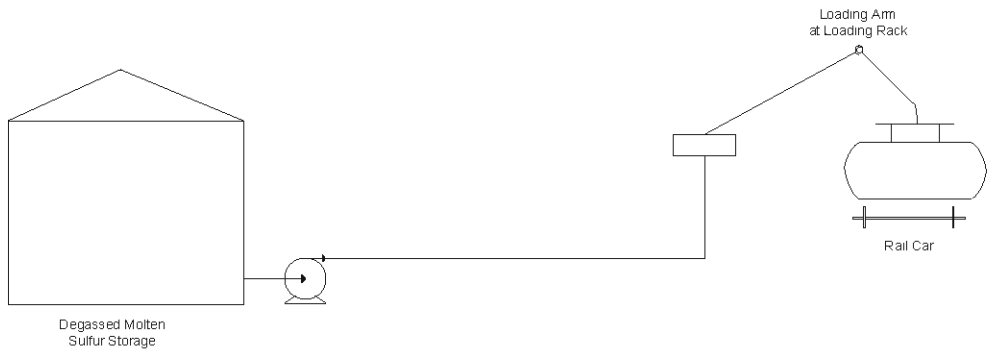

Mustang Engineering	Hyperion Resources Galaxy Project			
	Sulfur Loading Facilities			
Mustang Job # 12588	DATE Sep-16-07	BY ARA	DWG NO SK-19	REV A
	SCALE	None	SHEET	1 OF 1

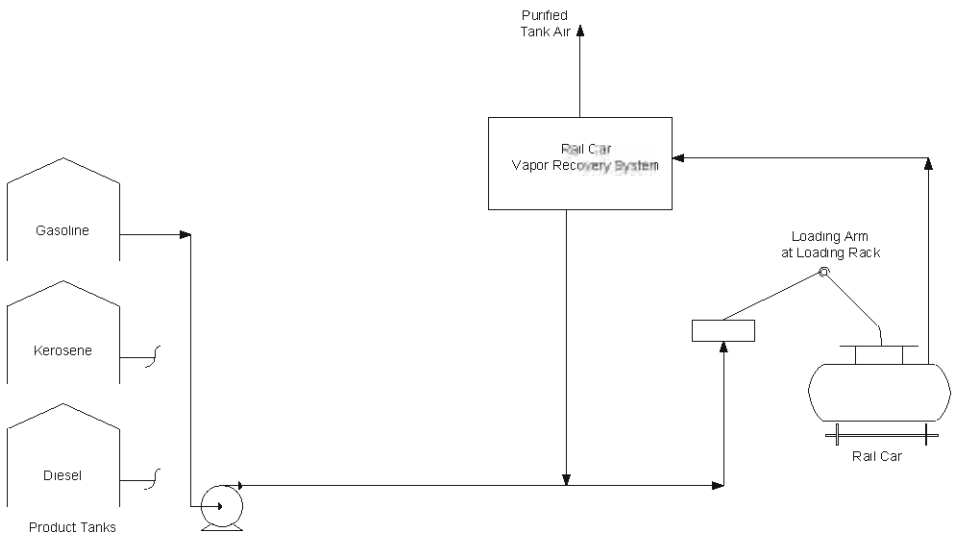

Notes
1) Each product has dedicated loading line and loading arm at the loading rack

Mustang Engineering	Hyperion Resources Galaxy Project			
	Hydrocarbon Products Rail Car Loading & Unloading Racks			
Mustang Job # 12588	DATE Sep-16-07	BY ARA	DWG NO SK-20	REV A
	SCALE	None	SHEET	1 OF 1

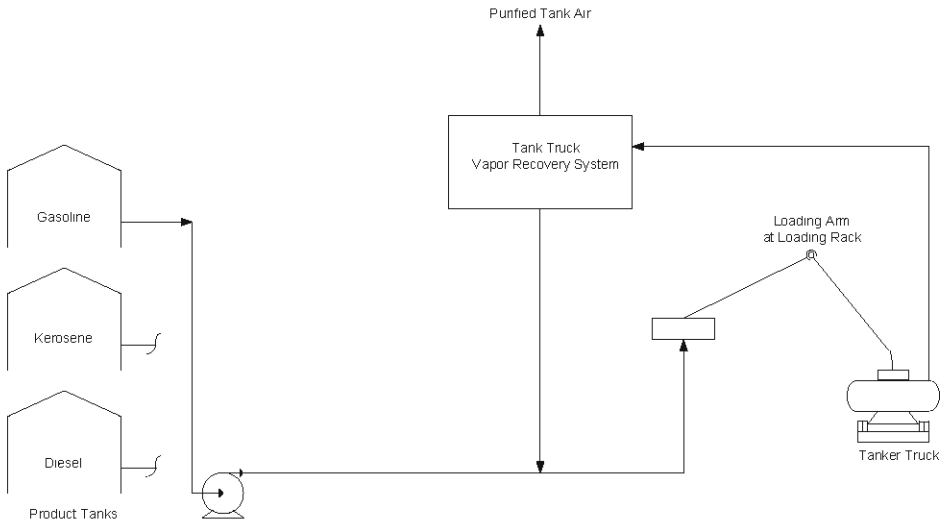

Notes
1) Each product has dedicated loading line and loading arm at the loading rack

Mustang Engineering	Hyperion Resources Galaxy Project			
	Hydrocarbon Products Truck Loading & Unloading Racks			
Mustang Job # 12588	DATE Sep-16-07	BY ARA	DWG NO SK-21	REV A
	SCALE	None	SHEET	1 OF 1

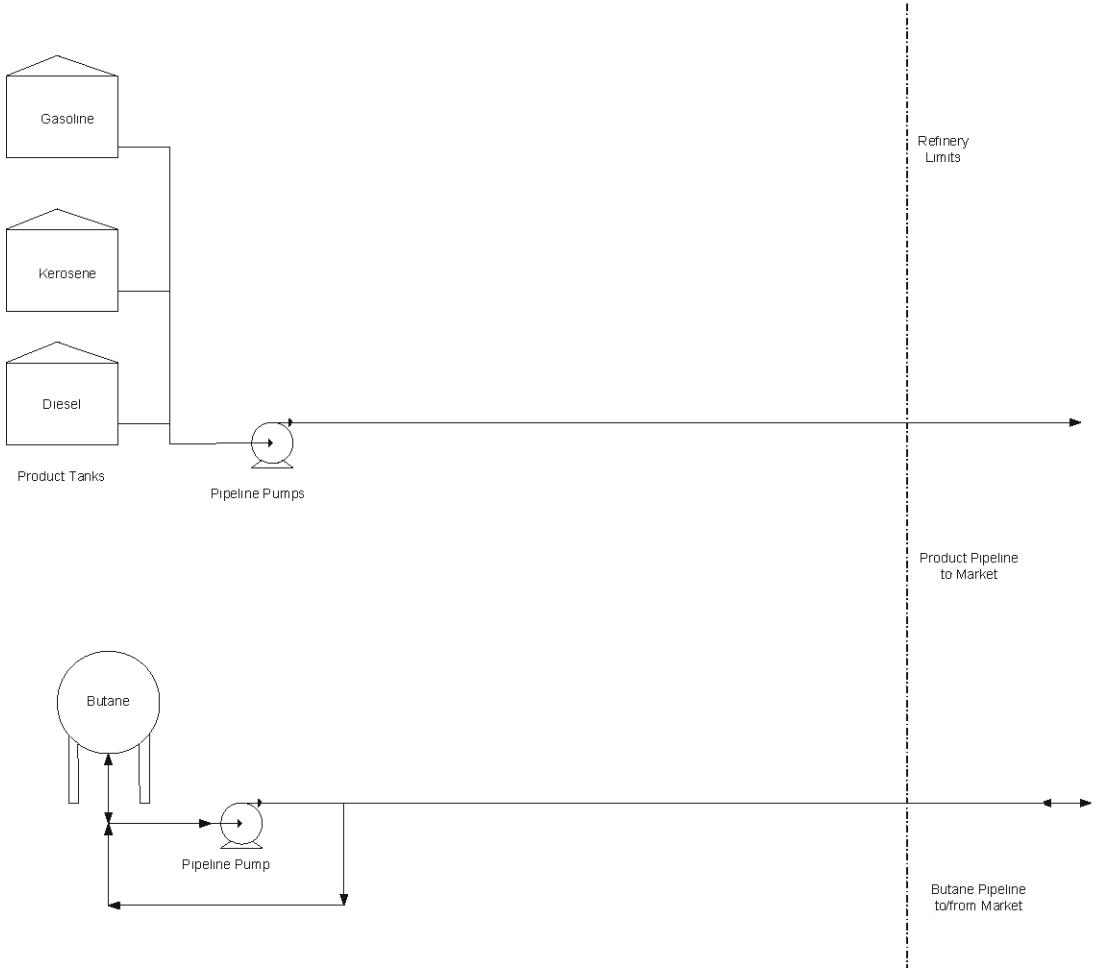

Mustang Engineering	Hyperion Resources Galaxy Project			
	Tank Farm / Pipeline Pumps			
Mustang Job # 12588	DATE Sep-16-07	BY ARA	DWG NO SK-22	REV A
	SCALE	None	SHEET	1 OF 1

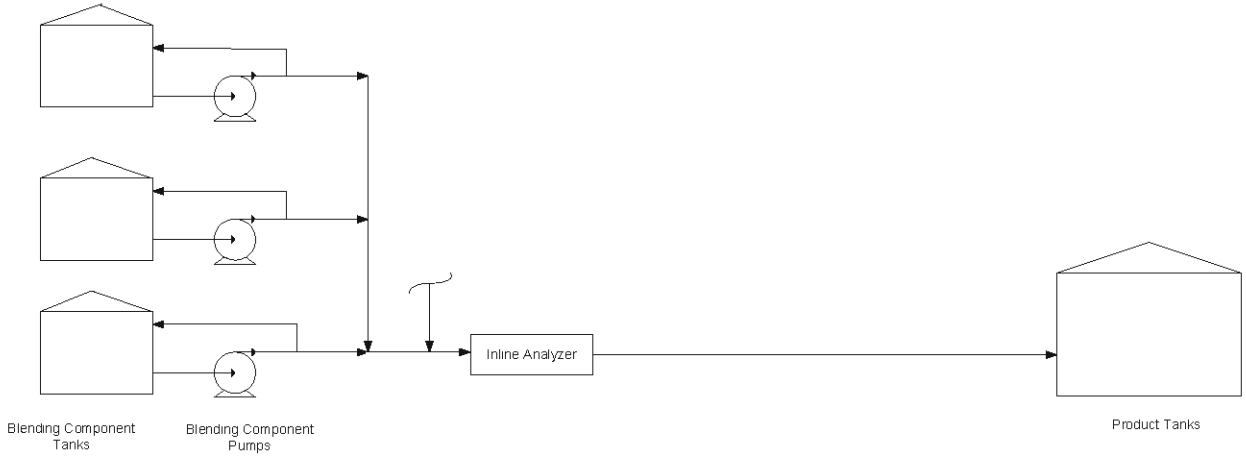

Mustang Engineering	Hyperion Resources Galaxy Project			
	Gasoline Blending			
Mustang Job # 12588	DATE Sep-16-07	BY ARA	DWG NO SK-23	REV A
	SCALE	None	SHEET	1 OF 1

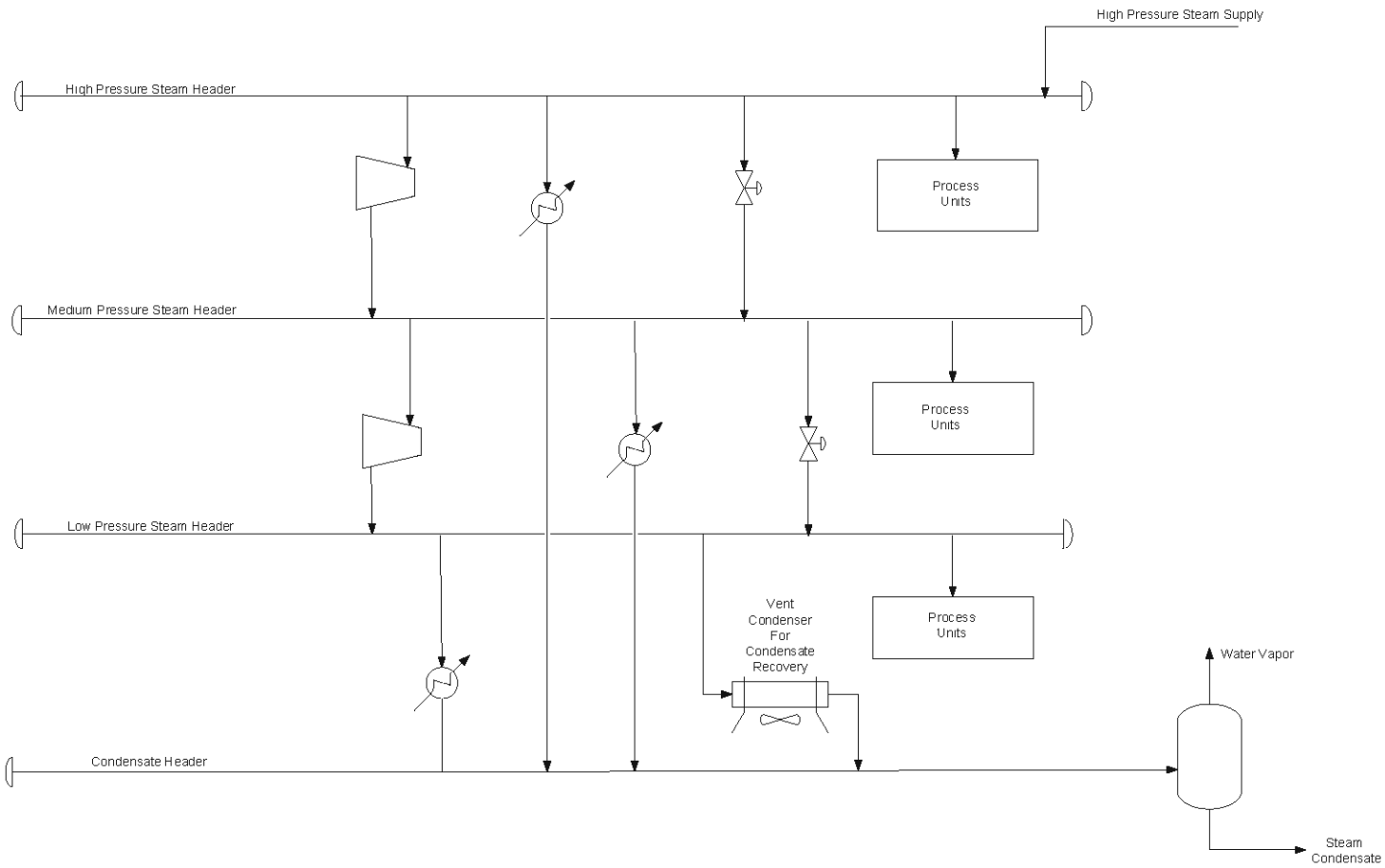

Mustang Engineering	Hyperion Resources Galaxy Project			
	Utilities - Steam System			
Mustang Job # 12588	DATE Sep-16-07	BY ARA	DWG NO SK-24	REV A
	SCALE	None	SHEET	1 OF 2

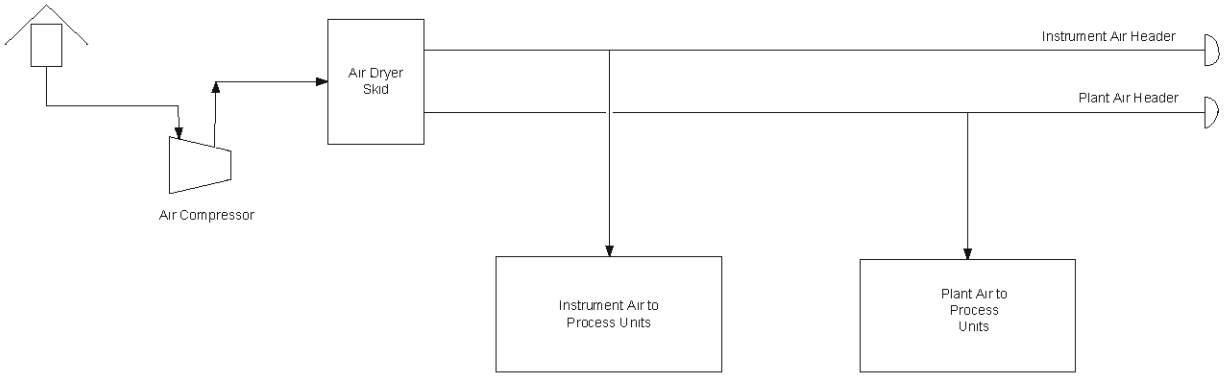

Mustang Engineering	Hyperion Resources Galaxy Project			
	Utilities - Air Compressor			
Mustang Job # 12588	DATE Sep-16-07	BY ARA	DWG NO SK-24	REV A
	SCALE	None	SHEET	2 OF 2

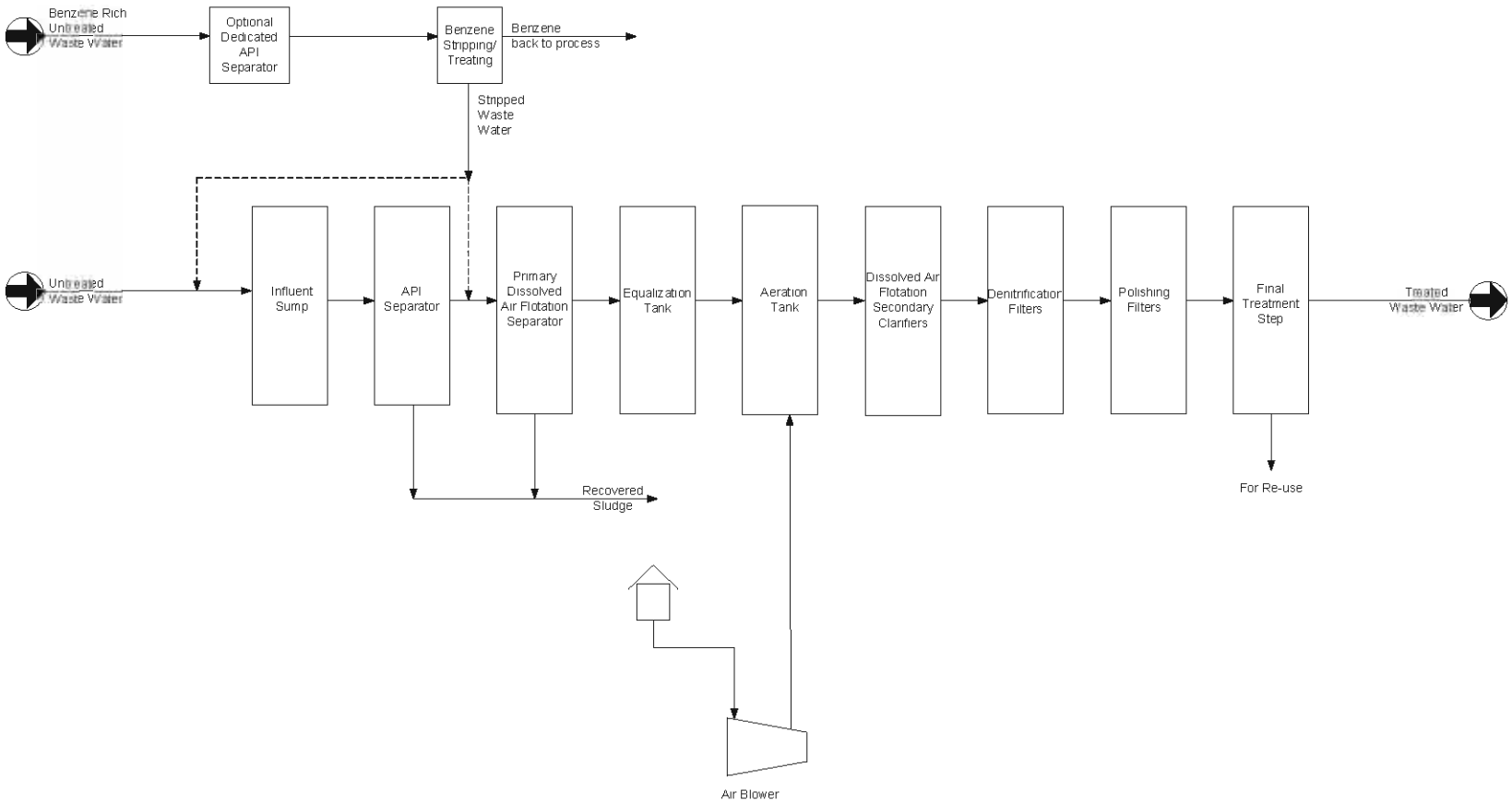

Mustang Engineering	Hyperion Resources Galaxy Project			
	Waste Water Treatment Plant			
Mustang Job # 12588	DATE Sep-25-07	BY ARA	DWG NO SK-25	REV B
	SCALE	None	SHEET	1 OF 1

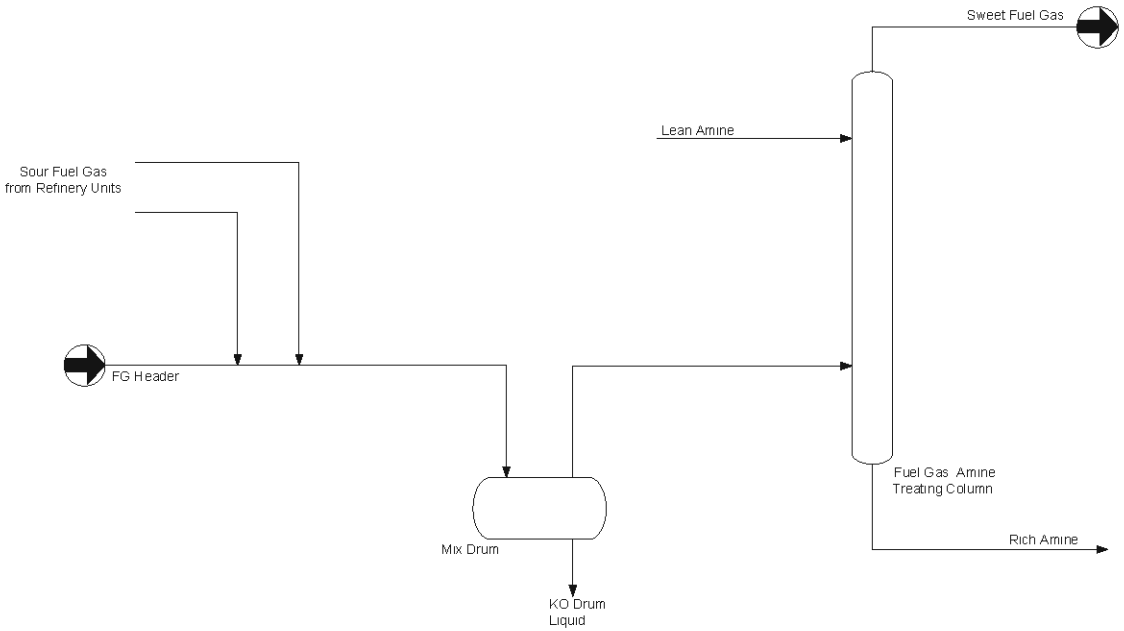

Mustang Engineering	Hyperion Resources Galaxy Project			
	Fuel Gas Treating System			
Mustang Job # 12588	DATE Sep-16-07	BY ARA	DWG NO SK-26	REV A
	SCALE	None	SHEET	1 OF 1

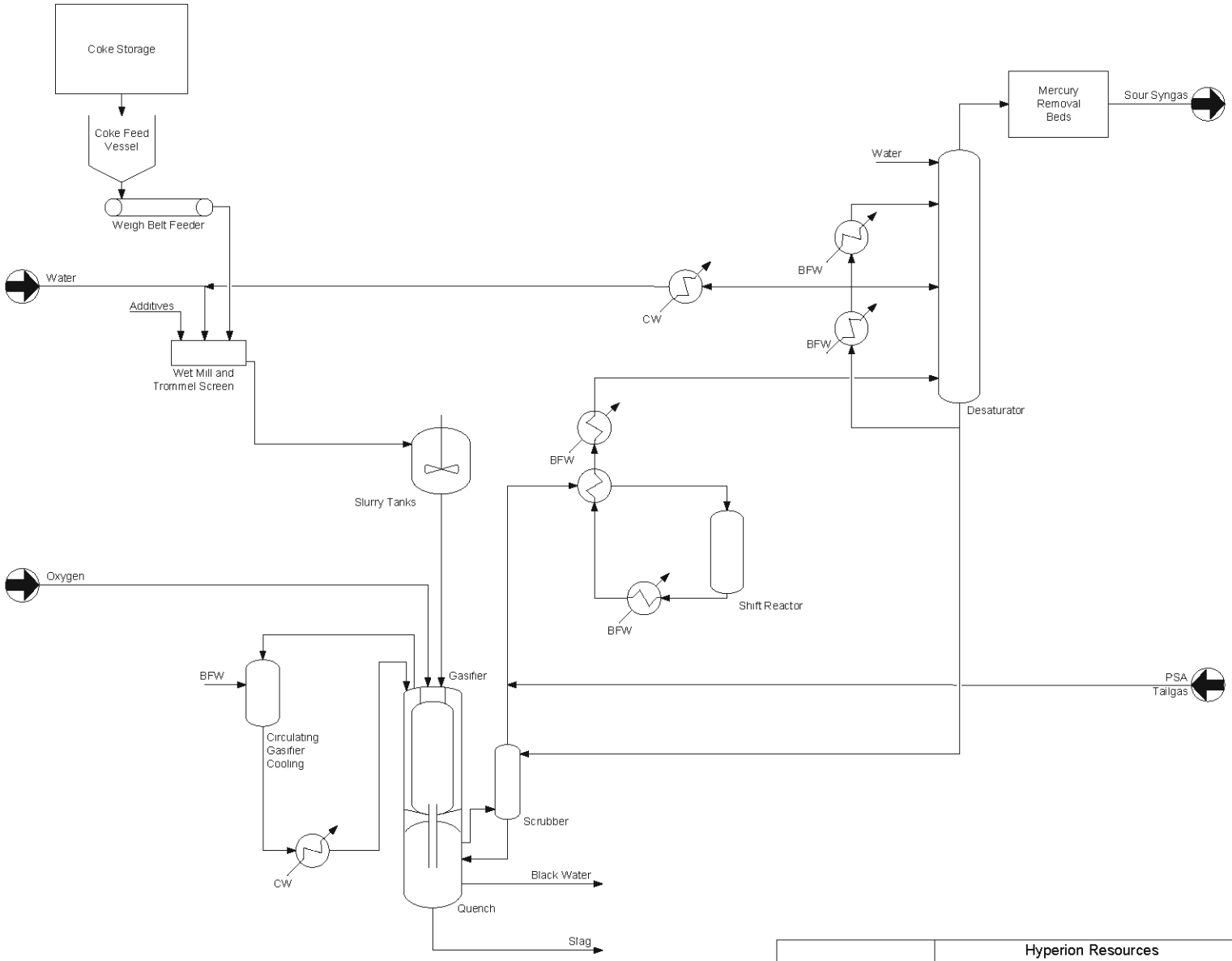

Mustang Engineering	Hyperion Resources Galaxy Project			
	IGCC Complex – Gasification			
Mustang Job # 12588	DATE Sep-27-07	BY JMM	DWG NO SK-201	REV B
	SCALE None		SHEET 1 OF 1	

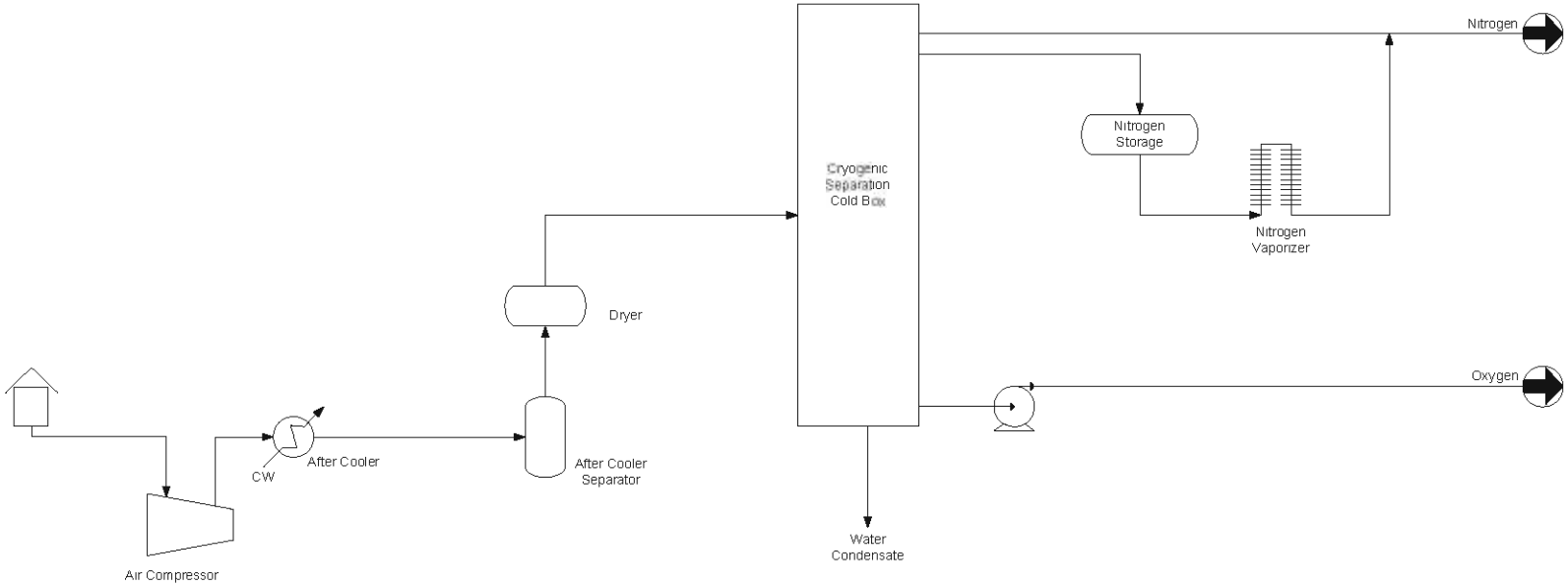

Mustang Engineering	Hyperion Resources Galaxy Project			
	IGCC Complex – Air Separation Unit			
Mustang Job # 12588	DATE Sep-27-07	BY JMM	DWG NO SK-202	REV B
	SCALE	None	SHEET	1 OF 1

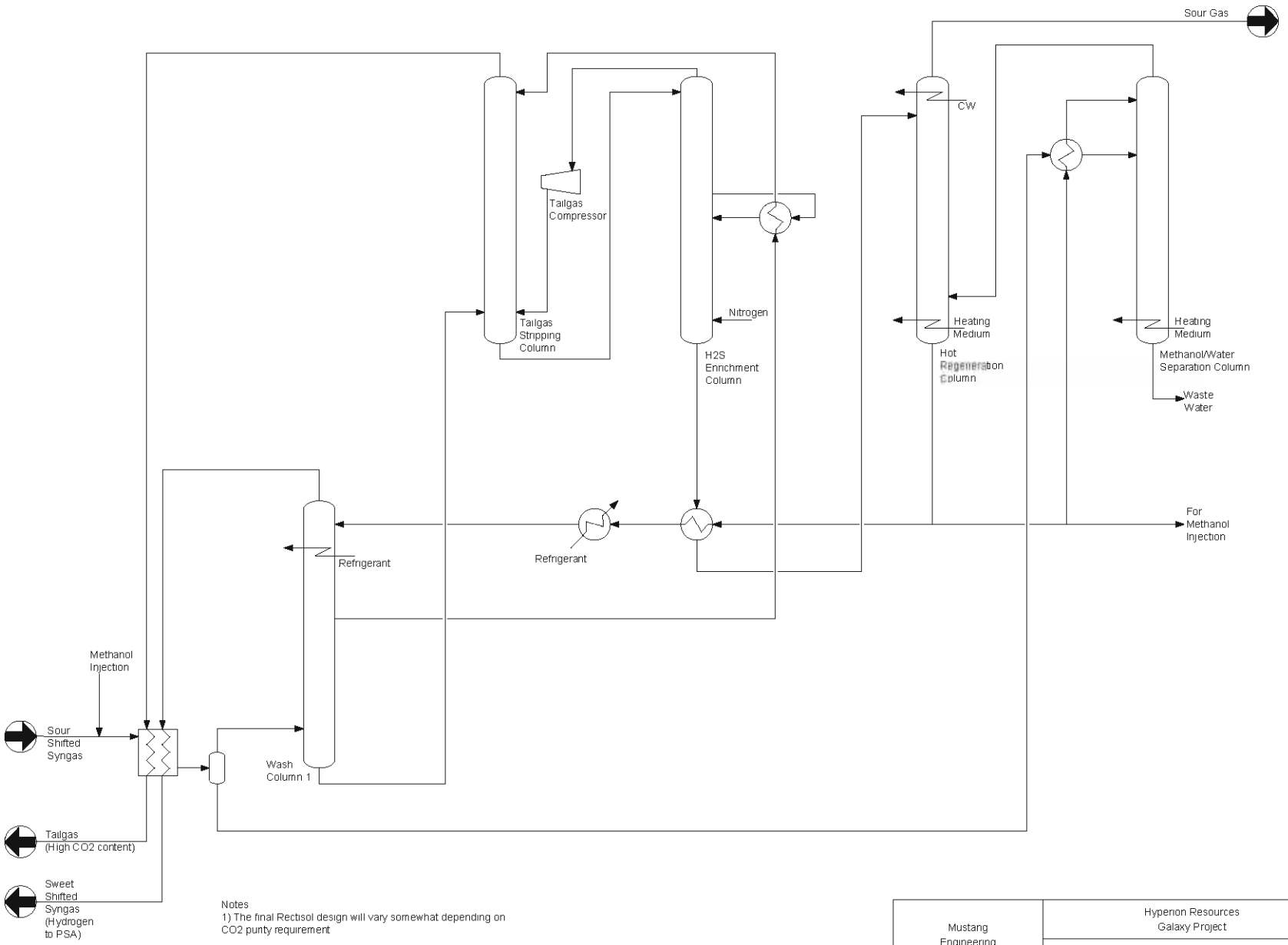

Notes
1) The final Rectisol design will vary somewhat depending on CO2 purity requirement

Mustang Engineering	Hyperion Resources Galaxy Project			
	IGCC Complex – Rectisol Package			
Mustang Job # 12588	DATE Oct-8-07	BY JMM	DWG NO SK-203	REV C
	SCALE	None	SHEET	1 OF 1

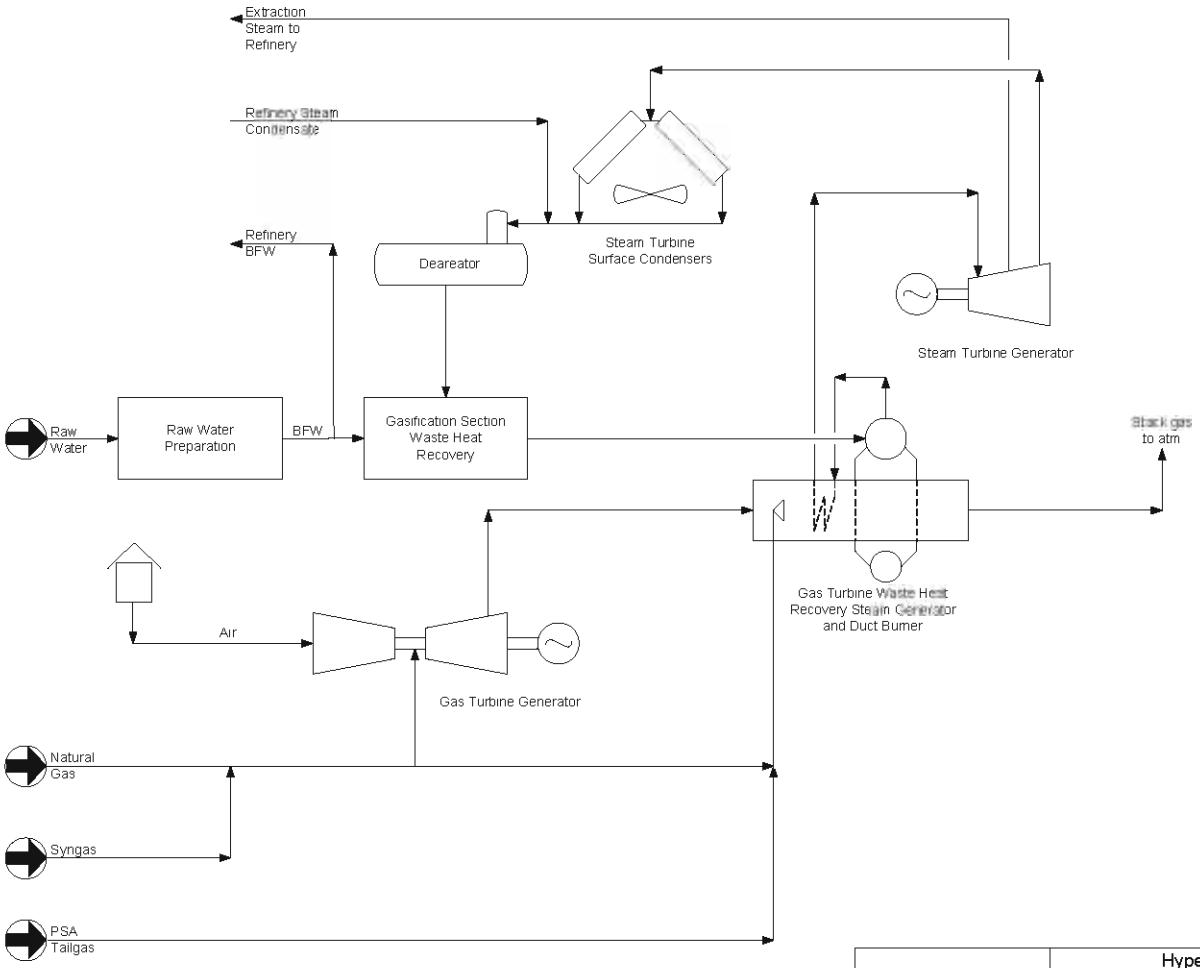

Mustang Engineering	Hyperion Resources Galaxy Project			
	IGCC Complex – Power and Steam Generation			
Mustang Job # 12588	DATE Sep-27-07	BY JMM	DWG NO SK-204	REV B
	SCALE None		SHEET 1 OF 1	

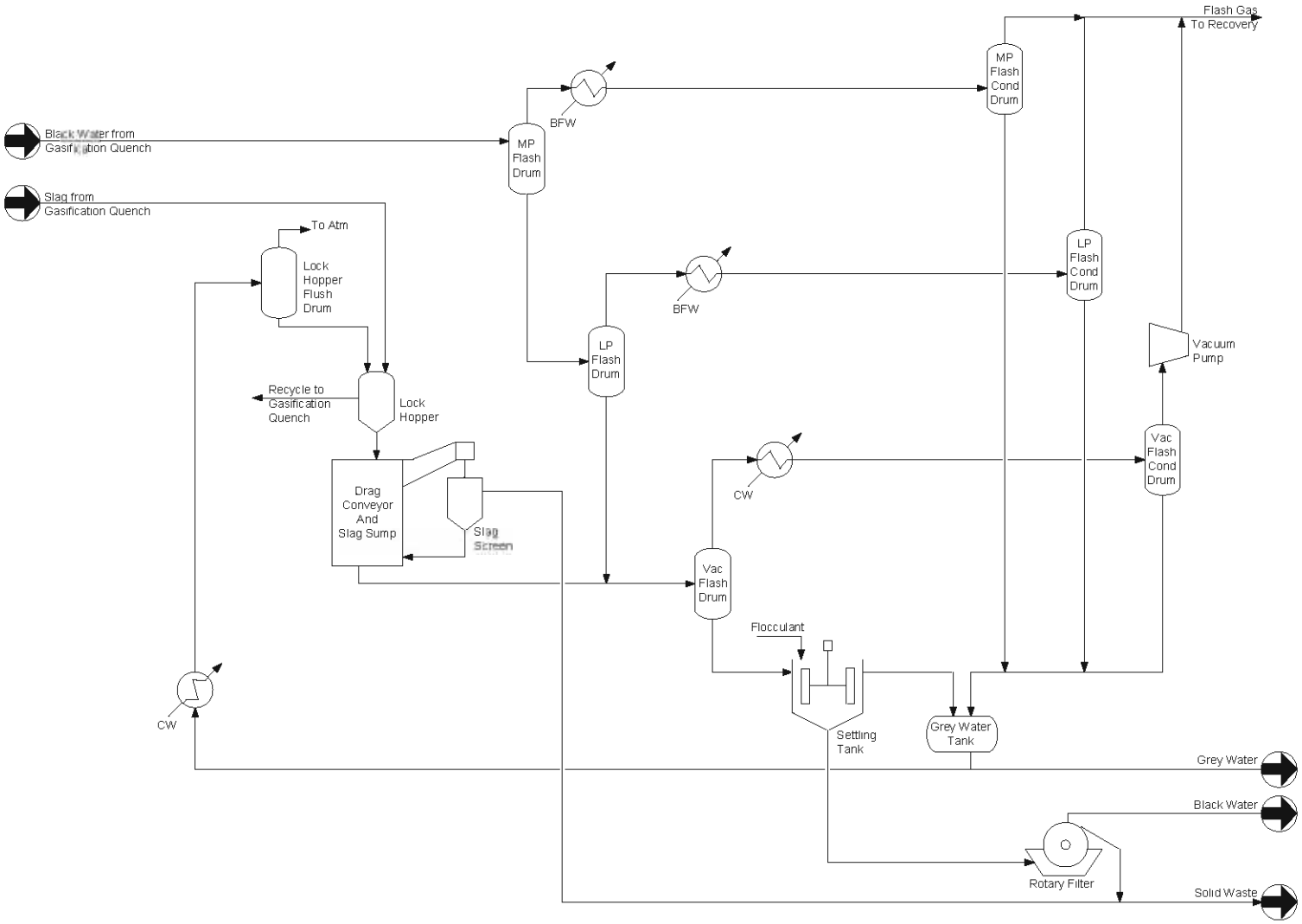

Mustang Engineering	Hyperion Resources Galaxy Project			
	IGCC Complex – Black / Grey Water Treatment			
Mustang Job # 12588	DATE Sep-16-07	BY JMM	DWG NO SK-205	REV A
	SCALE	None	SHEET	1 OF 1

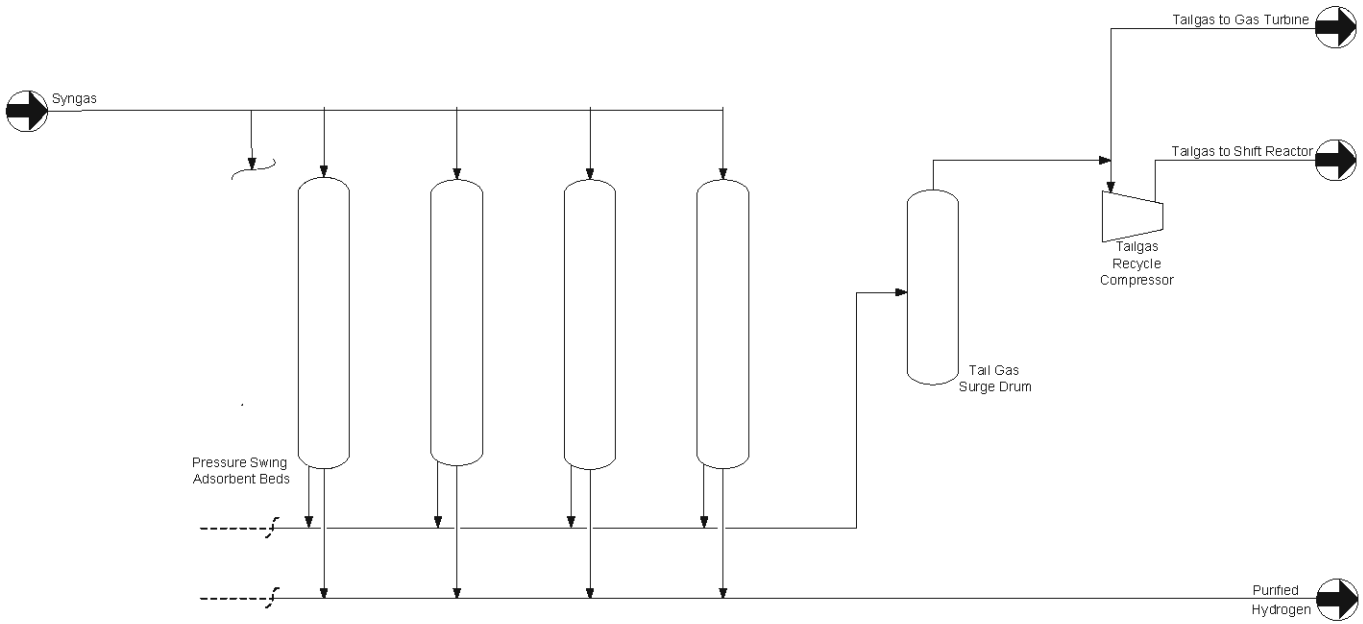

Mustang Engineering	Hyperion Resources Galaxy Project			
	IGCC Complex – PSA and Tailgas Recycle Compressor			
Mustang Job # 12588	DATE Sep-16-07	BY JMM	DWG NO SK-206	REV A
	SCALE	None	SHEET	1 OF 1

Appendix C

Emission Calculations

Hyperion Energy Center
Emission Calculations
Process Heaters

# of Units [1]	Service	Max. Firing Rate [MMBtu/hr]		Pollutant	lb/MMBtu	Emission Rate	
		(LHV)	(HHV)			[#/hr]	[ton/yr]
2	CDU/VDU Crude Charge Heater	472.88	530.15	NOx	0.0060	6.4	27.9
				SO2	0.0046	4.9	21.5
				CO	0.040	42.4	185.8
				VOC	0.0047	5.0	21.8
				PM10	0.0075	8.0	34.8
				PM	0.0019	2.0	8.8
				H2SO4	0.0007	0.8	3.3
				Org HAP	0.0047	5.0	21.8
				HCl	0.0012	1.3	5.6
				NH3	0.0022	2.3	10.2
2	CDU/VDU Vacuum Charge Heater	191.47	214.66	NOx	0.0060	2.6	11.3
				SO2	0.0046	2.0	8.7
				CO	0.040	17.2	75.2
				VOC	0.0047	2.0	8.8
				PM10	0.0075	3.2	14.1
				PM	0.0019	0.8	3.6
				H2SO4	0.0007	0.3	1.3
				Org HAP	0.0047	2.0	8.8
				HCl	0.0012	0.5	2.3
				NH3	0.0022	0.9	4.1
1	NHT with Splitter Charge Heater	178.04	199.60	NOx	0.0060	1.2	5.2
				SO2	0.0046	0.9	4.0
				CO	0.040	8.0	35.0
				VOC	0.0047	0.9	4.1
				PM10	0.0075	1.5	6.6
				PM	0.0019	0.4	1.7
				H2SO4	0.0007	0.1	0.6
				Org HAP	0.0047	0.9	4.1
				HCl	0.0012	0.2	1.0
				NH3	0.0022	0.4	1.9
1	NHT with Splitter Stripper Reboiler Heater	150.54	168.78	NOx	0.0060	1.0	4.4
				SO2	0.0046	0.8	3.4
				CO	0.040	6.8	29.6
				VOC	0.0047	0.8	3.5
				PM10	0.0075	1.3	5.5
				PM	0.0019	0.3	1.4
				H2SO4	0.0007	0.1	0.5
				Org HAP	0.0047	0.8	3.5
				HCl	0.0012	0.2	0.9
				NH3	0.0022	0.4	1.6
1	NHT with Splitter Naphtha Splitter Reboiler Heater	220.18	246.84	NOx	0.0060	1.5	6.5
				SO2	0.0046	1.1	5.0
				CO	0.040	9.9	43.2
				VOC	0.0047	1.2	5.1
				PM10	0.0075	1.9	8.1
				PM	0.0019	0.5	2.1
				H2SO4	0.0007	0.2	0.8
				Org HAP	0.0047	1.2	5.1
				HCl	0.0012	0.3	1.3
				NH3	0.0022	0.5	2.4

Hyperion Energy Center
Emission Calculations
Process Heaters

# of Units [1]	Service	Max. Firing Rate [MMBtu/hr] (LHV)	Max. Firing Rate [MMBtu/hr] (HHV)	Pollutant	lb/MMBtu	Emission Rate [#/hr]	Emission Rate [ton/yr]
1	DHT Combined Feed Heater	125.37	140.55	NOx	0.0060	0.8	3.7
				SO2	0.0046	0.7	2.8
				CO	0.040	5.6	24.6
				VOC	0.0047	0.7	2.9
				PM10	0.0075	1.1	4.6
				PM	0.0019	0.3	1.2
				H2SO4	0.0007	0.1	0.4
				Org HAP	0.0047	0.7	2.9
				HCl	0.0012	0.2	0.7
				NH3	0.0022	0.3	1.4
2	Delayed Coker Unit Drum Pair 1	216.26	242.46	NOx	0.0060	2.9	12.7
				SO2	0.0046	2.2	9.8
				CO	0.040	19.4	85.0
				VOC	0.0047	2.3	10.0
				PM10	0.0075	3.6	15.9
				PM	0.0019	0.9	4.0
				H2SO4	0.0007	0.3	1.5
				Org HAP	0.0047	2.3	10.0
				HCl	0.0012	0.6	2.5
				NH3	0.0022	1.1	4.7
2	Delayed Coker Unit Drum Pair 2	216.26	242.46	NOx	0.0060	2.9	12.7
				SO2	0.0046	2.2	9.8
				CO	0.040	19.4	85.0
				VOC	0.0047	2.3	10.0
				PM10	0.0075	3.6	15.9
				PM	0.0019	0.9	4.0
				H2SO4	0.0007	0.3	1.5
				Org HAP	0.0047	2.3	10.0
				HCl	0.0012	0.6	2.5
				NH3	0.0022	1.1	4.7
2	CCR Platforming Charge Heater + Interheater No.1 + Common Convection - HTR001/002	735.45	824.52	NOx	0.0060	9.9	43.3
				SO2	0.0046	7.6	33.4
				CO	0.040	66.0	288.9
				VOC	0.0047	7.7	33.9
				PM10	0.0075	12.4	54.2
				PM	0.0019	3.1	13.7
				H2SO4	0.0007	1.2	5.1
				Org HAP	0.0047	7.7	33.9
				HCl	0.0012	2.0	8.7
				NH3	0.0022	3.6	15.9
2	CCR Platforming No. 2 Interheater + No. 3 Interheater + Common Convection - HTR003/004	439.61	492.85	NOx	0.0060	5.9	25.9
				SO2	0.0046	4.6	20.0
				CO	0.040	39.4	172.7
				VOC	0.0047	4.6	20.3
				PM10	0.0075	7.4	32.4
				PM	0.0019	1.9	8.2
				H2SO4	0.0007	0.7	3.1
				Org HAP	0.0047	4.6	20.3
				HCl	0.0012	1.2	5.2
				NH3	0.0022	2.2	9.5

Hyperion Energy Center
Emission Calculations
Process Heaters

# of Units [1]	Service	Max. Firing Rate [MMBtu/hr]		Pollutant	lb/MMBtu	Emission Rate	
		(LHV)	(HHV)			[#/hr]	[ton/yr]
1	CCR Reformate Splitter CCR Reformate Splitter Reboiler	123.09	138.00	NOx	0.0060	0.8	3.6
				SO2	0.0046	0.6	2.8
				CO	0.040	5.5	24.2
				VOC	0.0047	0.6	2.8
				PM10	0.0075	1.0	4.5
				PM	0.0019	0.3	1.1
				H2SO4	0.0007	0.1	0.4
				Org HAP	0.0047	0.6	2.8
				HCl	0.0012	0.2	0.7
				NH3	0.0022	0.3	1.3
2	Hydrocracker Rxn Section Stage 1 Recycle Gas Heater Train 1	59.64	66.86	NOx	0.025	3.3	14.6
				SO2	0.0046	0.6	2.7
				CO	0.040	5.3	23.4
				VOC	0.0047	0.6	2.8
				PM10	0.0075	1.0	4.4
				PM	0.0019	0.3	1.1
				H2SO4	0.0001	0.0	0.1
				Org HAP	0.0047	0.6	2.8
				HCl	0.0012	0.2	0.7
2	Hydrocracker Rxn Section Stage 1 Recycle Gas Heater Train 2	59.64	66.86	NOx	0.025	3.3	14.6
				SO2	0.0046	0.6	2.7
				CO	0.040	5.3	23.4
				VOC	0.0047	0.6	2.8
				PM10	0.0075	1.0	4.4
				PM	0.0019	0.3	1.1
				H2SO4	0.0001	0.0	0.1
				Org HAP	0.0047	0.6	2.8
				HCl	0.0012	0.2	0.7
2	Hydrocracker Rxn Section Stage 1 Recycle Gas Heater Train 3	59.64	66.86	NOx	0.025	3.3	14.6
				SO2	0.0046	0.6	2.7
				CO	0.040	5.3	23.4
				VOC	0.0047	0.6	2.8
				PM10	0.0075	1.0	4.4
				PM	0.0019	0.3	1.1
				H2SO4	0.0001	0.0	0.1
				Org HAP	0.0047	0.6	2.8
				HCl	0.0012	0.2	0.7
2	Hydrocracker Rxn Section Stage 2 Recycle Gas Heater Train 1	57.89	64.91	NOx	0.025	3.2	14.2
				SO2	0.0046	0.6	2.6
				CO	0.040	5.2	22.7
				VOC	0.0047	0.6	2.7
				PM10	0.0075	1.0	4.3
				PM	0.0019	0.2	1.1
				H2SO4	0.0001	0.0	0.1
				Org HAP	0.0047	0.6	2.7
				HCl	0.0012	0.2	0.7

Hyperion Energy Center
Emission Calculations
Process Heaters

# of Units [1]	Service	Max. Firing Rate [MMBtu/hr]		Pollutant	lb/MMBtu	Emission Rate	
		(LHV)	(HHV)			[#/hr]	[ton/yr]
2	Hydrocracker Rxn Section Stage 2 Recycle Gas Heater Train 2	57.89	64.91	NOx	0.025	3.2	14.2
				SO2	0.0046	0.6	2.6
				CO	0.040	5.2	22.7
				VOC	0.0047	0.6	2.7
				PM10	0.0075	1.0	4.3
				PM	0.0019	0.2	1.1
				H2SO4	0.0001	0.0	0.1
				Org HAP	0.0047	0.6	2.7
				HCl	0.0012	0.2	0.7
2	Hydrocracker Frac Section Product Fractionator Feed Heater	602.54	675.52	NOx	0.0060	8.1	35.5
				SO2	0.0046	6.3	27.4
				CO	0.040	54.0	236.7
				VOC	0.0047	6.3	27.8
				PM10	0.0075	10.1	44.4
				PM	0.0019	2.6	11.2
				H2SO4	0.0007	1.0	4.2
				Org HAP	0.0047	6.3	27.8
				HCl	0.0012	1.6	7.1
				NH3	0.0022	3.0	13.1
1	Oleflex Charge Heater+ Interheater No. 1 + Interheater No. 2 + Convection Steam Generation + Convection Economizer	539.14	604.43	NOx	0.0060	3.6	15.9
				SO2	0.0046	2.8	12.3
				CO	0.040	24.2	105.9
				VOC	0.0047	2.8	12.4
				PM10	0.0075	4.5	19.9
				PM	0.0019	1.1	5.0
				H2SO4	0.0007	0.4	1.9
				Org HAP	0.0047	2.8	12.4
				HCl	0.0012	0.7	3.2
				NH3	0.0022	1.3	5.8

Notes:

1. In cases where there are multiple units, heat input rate is provided for one heater; emission rates are provided for all heaters in total.

Hyperion Energy Center
Emission Calculations
Refinery Flare

# of Units	Service	Max. Firing Rate [MMBtu/hr]		Pollutant	lb/MMBtu	Emission Rate	
		(LHV)	(HHV)			[#/hr]	[ton/yr]
5	Refinery Flare Pilot	0.9	1.00	NOx	0.068	0.1	0.3
				SO2	0.0046	0.0	0.0
				CO	0.37	0.4	1.6
				VOC	0.14	0.1	0.6
				PM10	0.0061	0.0	0.0
				PM	0.0015	0.0	0.0
				H2SO4	0.00008	0.0	0.0
				Org HAP	0.0047	0.0	0.0
				HCl	0.0012	0.0	0.0

Hyperion Energy Center
Emission Calculations
Sulfur Recovery Plant

# of Units	Service	Max. Firing Rate [MMBtu/hr]		Pollutant	lb/MMBtu	Emission Rate	
		(LHV)	(HHV)			[#/hr]	[ton/yr]
4	Sulfur Recovery Plant Thermal Oxidizer (Maximum Coke Design Case)	89.75	100.62	NOx	0.068	27.4	119.9
				SO2	n/a	114.2	500.2
				CO	0.082	33.1	145.2
				VOC	0.005	2.2	9.5
				PM10	0.0278	11.2	49.0
				PM	0.0070	2.8	12.4
				H2SO4	n/a	8.7	38.3
				Org HAP	0.0047	1.9	8.3
				H2S	n/a	0.3	1.3
				HCL	0.0012	0.5	2.1
4	Sulfur Recovery Plant Thermal Oxidizer (Natural Gas Design Case)	89.75	100.62	NOx	0.068	27.4	119.9
				SO2	n/a	105.5	462.1
				CO	0.082	33.1	145.2
				VOC	0.005	2.2	9.5
				PM10	0.0262	10.5	46.1
				PM	0.0066	2.7	11.7
				H2SO4	n/a	8.1	35.4
				Org HAP	0.0047	1.9	8.3
				H2S	n/a	0.3	1.3
				HCL	0.0012	0.5	2.1

Heat input rate is provided for one thermal oxidizer; emission rates are provided for entire plant.

SOx limits calculated as 0.03 percent of design sulfur feed rate, reported as SO2.

Using Maximum Coke Design Case to illustrate:

(2040 lt/day) * (2240 lbs/lt) * 0.0003 * (2 lbs SO2/lb S) / (24 hr/day) = 114.2 lbs SO2 / hr

SO2 emissions assumed equal to SOx emission limit

H2SO4 emissions assumed equal to 5% of SOx emission limit, corrected for molecular weight:

Using Maximum Coke Design Case to illustrate:

(114.2 lbs SO2 / hr) * 0.05 * (98 lbs H2SO4 / 64 lbs SO2)

H2S based on BACT emission limit

Hyperion Energy Center
Emission Calculations
Storage Tanks VOC

Tank ID	Description		Qnty	Total Nominal Volume of One Tank Gallons	Total Working Volume of One Tank Gallons	Total Annual VOC Emissions from One Tank Pounds	Total Annual VOC Emissions from One Tank Tons	Total Annual VOC Emissions from Storage Pounds	Total Annual VOC Emissions from Storage Tons	Notes
Refinery Feeds										
RF1	Crude		10	21,328,296	17,329,241	5,329	2.66	53,287	26.64	1,3
Refinery Products										
RP4	Conventional Regular Gasoline	Sum/Win	2	8,440,788	6,858,140	3,478	1.74	6,957	3.48	1
RP5	Conventional Premium Gasoline	Sum/Win	1	8,440,788	6,858,140	3,321	1.66	3,321	1.66	1
RP6	Conventional Regular Subgrade Gasoline	Sum/Win	7	8,440,788	6,858,140	3,523	1.76	24,663	12.33	1
RP7	Conventional Premium Subgrade Gasoline	Sum/Win	1	8,440,788	6,858,140	3,516	1.76	3,516	1.76	1
RP8	RBOB Regular Gasoline	Sum/Win	4	8,440,788	6,858,140	3,516	1.76	14,063	7.03	1
RP9	RBOB Premium Gasoline	Sum/Win	1	8,440,788	6,858,140	3,434	1.72	3,434	1.72	1
RP10	Jet Fuel (HC Kerosene)		3	8,440,788	6,858,140	291	0.15	872	0.44	1
RP11	ULSD Diesel Product		11	8,440,788	6,858,140	359	0.18	3,944	1.97	1
Intermediate Products										
IP3	LSR from Crude Unit		2	10,505,226	8,535,496	6,739	3.37	13,478	6.74	1
IP4	Coker Naphtha		1	8,440,788	6,858,140	1,473	0.74	1,473	0.74	1, 3
IP5	Hydrotreated Light Nap (HT LN) (Penex Feed)		2	6,345,609	5,155,807	1,396	0.70	2,792	1.40	1, 3
IP6	Hydrotreated Heavy Nap (HT HN) (Blendstock+ CCR Feed)		2	8,440,788	6,858,140	1,575	0.79	3,151	1.58	1, 3
IP7	HCHN (To Reformers)		2	14,277,620	11,600,566	2,416	1.21	4,832	2.42	1, 3
IP8	HCLN (Total Bensat Feed+Blend Component)		2	6,345,609	5,155,807	1,363	0.68	2,725	1.36	1, 3
IP9	Light Reformate (Alternate Bensat Feed)		1	4,197,691	3,410,624	1,061	0.53	1,061	0.53	1, 3
IP10	Saturated HCLN (Bensat product)		2	2,085,872	1,694,771	735	0.37	1,470	0.74	1, 3
IP11	Reformate		4	8,440,788	6,858,140	1,541	0.77	6,164	3.08	1, 3
IP12	Heavy Reformate		1	8,440,788	6,858,140	1,678	0.84	1,678	0.84	1, 3
IP13	Isomerate		2	6,345,609	5,155,807	9,516	4.76	19,031	9.52	1, 5
IP14	Inalk Alkylate		2	2,545,294	2,068,052	599	0.30	1,199	0.60	1, 6
IP15	Inalk C12+ Stream		1	451,243	366,635	114	0.06	114	0.06	1, 7
IP16	Straight Run Kerosene (To DHDS)		2	4,197,691	3,410,624	343	0.17	685	0.34	1
IP17	Straight Run Diesel (To DHDS)		3	4,197,691	3,410,624	446	0.22	1,338	0.67	1
IP18	AGO (To DHDS)		1	4,197,691	3,410,624	6,519	3.26	6,519	3.26	1, 8
IP19	Coker LCGO (To DHDS)		2	4,197,691	3,410,624	542	0.27	1,083	0.54	1, 9
IP20	DHDS ULSD Product		3	8,440,788	6,858,140	690	0.35	2,071	1.04	1, 3
IP21	DHDS Naphtha Product		1	2,085,872	1,694,771	684	0.34	684	0.34	1, 3
IP22	Hydrocracker Diesel		2	8,440,788	6,858,140	690	0.35	1,381	0.69	1, 3
IP23	VGO		3	14,277,620	11,600,566	21,670	10.84	65,010	32.51	1, 8
IP24	Coker HCGO (Hydrocracker Charge)		2	4,197,691	3,410,624	3,866	1.93	7,732	3.87	1, 10
IP25	VR (Coker Charge)		2	21,328,296	17,329,241	9,253	4.63	18,505	9.25	1, 11
IP26	Ethanol		2	146,889	113,839	94	0.05	188	0.09	1
Support Systems Tanks										
SS1	Slop		2	3,412,527	2,772,678	3,966	1.98	7,931	3.97	1, 12
SS2	Sour Water - Coker / Crude/Vac		1	4,197,691	3,410,624	3,087	1.54	3,087	1.54	13
SS3	Sour Water - HC / HDS		1	6,345,609	5,155,807	3,642	1.82	3,642	1.82	13
SS4	Sour Water - Swing		1	6,345,609	5,155,807	3,642	1.82	3,642	1.82	13
SS5	Stormwater Surge		3	26,235,567	21,316,398	0				4
SS6	Caustic (Fresh)		1	113,751	108,063	0				4
SS7	Caustic (Spent)		1	113,751	108,063	0				4
SS8	Amine (Lean)		1	6,345,609	5,684,608	1,229	0.61	1,229	0.61	14
SS9	Amine (Rich)		1	6,345,609	5,155,807	117	0.06	117	0.06	14
SS10	Amine Swing Tank (Either Sour or Sweet)		1	6,345,609	5,155,807	117	0.06	117	0.06	14
SS11	Fire Water		3	26,235,567	23,502,695					4
SS12	Potable water		2	128,528	121,184					4
SS13	Molten Sulfur		2	2,085,872	1,998,961					4
SS14	Gasoline Product Tank (w/additives) Truck Loading Day Tank 1		1	149,192	121,219	1,041	0.52	1,041	0.52	1
SS15	Gasoline Product Tank (w/additives) Truck Loading Day Tank 2		1	149,192	121,219	1,041	0.52	1,041	0.52	1
SS16	Gasoline Product Tank (w/additives) Truck Loading Day Tank 3		1	149,192	121,219	1,041	0.52	1,041	0.52	1
SS17	Gasoline Product Tank (w/additives) Truck Loading Day Tank 4		1	149,192	121,219	1,041	0.52	1,041	0.52	1
SS18	Gasoline Product Tank (w/additives) Truck Loading Day Tank 5		1	149,192	121,219	1,041	0.52	1,041	0.52	1
SS19	Gasoline Product Tank (w/additives) Truck Loading Day Tank 6		1	149,192	121,219	1,041	0.52	1,041	0.52	1
SS20	Kerosine Product Tank (w/additives) Truck Loading Day Tank		1	149,192	121,219	456	0.23	456	0.23	1
SS21	Diesel Product Tank (w/additives) Truck Loading Day Tank		1	149,192	121,219	462	0.23	462	0.23	1
SS22	Methanol Storage Tank for Rectisol Unit		1	31,172	26,417	93	0.05	93	0.05	1
	Total Emissions					***124,826***	***62***	***305,445***	***153***	

1 Assumed welded deck type with typical fittings. Tanks equipped with liquid-mounted primary seal and rim-mounted secondary seal.
2 Assumed Pressurized tank with negligible emissions per EPA Guidance
3 Assumed Naphtha is Jet Naphtha for TANKS program
4 No VOC emissions
5 Assumed Isopentane.
6 Assumed iso-octane
7 Assumed n-dodecane
8 Assumed similar to #4 fuel oil (50% #2f.o. + 50% #6f.o.)
9 Assumed similar to #3 fuel oil 80% #2f.o. + 20% #6f.o.)
10 Assumed similar to #5 fuel oil (25% #2f.o. + 75% #6f.o.)
11 Assumed similar asphalt pitch with vapor pressure of 0.04 psia (per Mustang Engineering)
12 Assumed similar to crude oil
13 Assumed layer of gasoline floats on top of sour water (RPV 8)
14 Assumed monoethanolamine

Hyperion Energy Center
Emission Calculations
Storage Tanks HAP

Tank ID	Description		Qnty	Total Annual HAP Emissions	Total Annual Benzene Emissions	Total Annual Ethylbenzene Emissions	Total Annual Hexane Emissions	Total Annual Methanol Emissions	Total Annual MTBE Emissions	Total Annual Naphthalene Emissions	Total Annual Toluene Emissions	Total Annual Xylene Emissions	Notes
				Tons	Pounds	Pounds	Pounds	Pounds	Pounds	Pounds	Pounds	Pounds	
Refinery Feeds													
RF1	Crude		10	0.53	1,066	0	0	0	0	0	0	0	1,3
Refinery Products													1
RP4	Conventional Regular Gasoline	Sum/Win	2	1.65	40	209	278	0	0	0	1,739	1,044	1
RP5	Conventional Premium Gasoline	Sum/Win	1	0.79	19	100	133	0	0	0	830	498	1
RP6	Conventional Regular Subgrade Gasoline	Sum/Win	7	5.87	141	740	987	0	0	0	6,166	3,699	1
RP7	Conventional Premium Subgrade Gasoline	Sum/Win	1	0.84	20	105	141	0	0	0	879	527	1
RP8	RBOB Regular Gasoline	Sum/Win	4	3.34	80	422	563	0	0	0	3,516	2,109	1
RP9	RBOB Premium Gasoline	Sum/Win	1	0.82	20	103	137	0	0	0	858	515	1
RP10	Jet Fuel (HC Kerosene)		3	0.01	8	0	0	0	0	4	7	7	1
RP11	ULSD Diesel Product		11	0.02	0	0	0	0	0	39	0	0	
													1
Intermediate Products													1, 3
IP3	LSR from Crude Unit		2	3.21	77	404	539	0	0	0	3,369	2,022	1, 3
IP4	Coker Naphtha		1	0.08	29	0	0	0	0	0	44	88	1, 3
IP5	Hydrotreated Light Nap (HT LN) (Penex Feed)		2	0.15	56	0	0	0	0	0	84	168	1, 3
IP6	Hydrotreated Heavy Nap (HT HN) (Blendstock+ CCR Feed)		2	0.17	63	0	0	0	0	0	95	189	1, 3
IP7	HCHN (To Reformers)		2	0.27	97	0	0	0	0	0	145	290	1, 3
IP8	HCLN (Total Bensat Feed+Blend Component)		2	0.15	55	0	0	0	0	0	82	164	1, 3
IP9	Light Reformate (Alternate Bensat Feed)		1	0.06	21	0	0	0	0	0	32	64	1, 3
IP10	Saturated HCLN (Bensat product)		2	0.08	29	0	0	0	0	0	44	88	1, 3
IP11	Reformate		4	0.34	123	0	0	0	0	0	185	370	1, 5
IP12	Heavy Reformate		1	0.09	34	0	0	0	0	0	50	101	1, 6
IP13	Isomerate		2	0.00	0	0	0	0	0	0	0	0	1, 7
IP14	Inalk Alkylate		2	0.00	0	0	0	0	0	0	0	0	1
IP15	Inalk C12+ Stream		1	0.00	0	0	0	0	0	0	0	0	1
IP16	Straight Run Kerosene (To DHDS)		2	0.01	0	0	0	0	0	21	0	0	1, 8
IP17	Straight Run Diesel (To DHDS)		3	0.01	0	0	0	0	0	13	0	0	1, 9
IP18	AGO (To DHDS)		1	0.00	0	0	0	0	0	0	0	0	1, 3
IP19	Coker LCGO (To DHDS)		2	0.00	0	0	0	0	0	0	0	0	1, 3
IP20	DHDS ULSD Product		3	0.01	0	0	0	0	0	21	0	0	1, 3
IP21	DHDS Naphtha Product		1	0.04	14	0	0	0	0	0	21	41	1, 8
IP22	Hydrocracker Diesel		2	0.01	0	0	0	0	0	14	0	0	1, 10
IP23	VGO		3	0.00	0	0	0	0	0	0	0	0	1, 11
IP24	Coker HCGO (Hydrocracker Charge)		2	0.00	0	0	0	0	0	0	0	0	1
IP25	VR (Coker Charge)		2	0.00	0	0	0	0	0	0	0	0	
													1, 12
IP26	Ethanol		2	0.00				0					13
													13
Support Systems Tanks													13
SS1	Slop		2	0.08	159	0	0	0	0	0	0	0	4
SS2	Sour Water - Coker / Crude/Vac		1	0.73	18	93	123	0	0	0	772	463	4
SS3	Sour Water - HC / HDS		1	0.87	21	109	146	0	0	0	910	546	4
SS4	Sour Water - Swing		1	0.87	21	109	146	0	0	0	910	546	14
SS5	Stormwater Surge		3	0.00									14
SS6	Caustic (Fresh)		1	0.00									14
SS7	Caustic (Spent)		1	0.00									4
SS8	Amine (Lean)		1	0.00	0	0	0	0	0	0	0	0	4
SS9	Amine (Rich)		1	0.00	0	0	0	0	0	0	0	0	4
SS10	Amine Swing Tank (Either Sour or Sweet)		1	0.00	0	0	0	0	0	0	0	0	1
SS11	Fire Water		3										1
SS12	Potable water		2										1
SS13	Molten Sulfur		2										1
													1
SS14	Gasoline Product Tank (w/additives) Truck Loading Day Tank 1		1	0.25	6	31	42	0	0	0	260	156	1
SS15	Gasoline Product Tank (w/additives) Truck Loading Day Tank 2		1	0.25	6	31	42	0	0	0	260	156	1
SS16	Gasoline Product Tank (w/additives) Truck Loading Day Tank 3		1	0.25	6	31	42	0	0	0	260	156	1
SS17	Gasoline Product Tank (w/additives) Truck Loading Day Tank 4		1	0.25	6	31	42	0	0	0	260	156	1
SS18	Gasoline Product Tank (w/additives) Truck Loading Day Tank 5		1	0.25	6	31	42	0	0	0	260	156	
SS19	Gasoline Product Tank (w/additives) Truck Loading Day Tank 6		1	0.25	6	31	42	0	0	0	260	156	
SS20	Kerosine Product Tank (w/additives) Truck Loading Day Tank		1	0.01	0	0	0	0	0	14	0	0	
SS21	Diesel Product Tank (w/additives) Truck Loading Day Tank		1	0.00	0	0	0	0	0	5	0	0	
SS22	Methanol Storage Tank for Rectisol Unit		1	0.05	0	0	0	93	0	0	0	0	
	Total Emissions			***22.63***	***2,243***	***2,581***	***3,442***		***0***	***131***	***22,300***	***14,476***	

1 Assumed welded deck type with typical fittings. Tanks equipped with liquid-mounted primary seal and rim-mounted secondary seal.
2 Assumed Pressurized tank with negligible emissions per EPA Guidance
3 Assumed Naphtha is Jet Naphtha for TANKS program
4 [reserved]
5 Assumed Isopentane.
6 Assumed iso-octane
7 Assumed n-dodecane
8 Assumed similar to #4 fuel oil (50% #2f.o. + 50% #6f.o.)
9 Assumed similar to #3 fuel oil 80% #2f.o. + 20% #6f.o.)
10 Assumed similar to #5 fuel oil (25% #2f.o. + 75% #6f.o.)
11 Assumed similar asphalt pitch with vapor pressure of 0.016 psia (per Tom Emmel)
12 Assumed similar to crude oil
13 Assumed composition similar to Hovensa sourwater - negligible VOC emissions.
14 Assumed monoethanolamine

Hyperion Energy Center
Emission Calculations
Catalyst Regenerators

		Reformer Regenerator Vents (2)					Oleflex Regenerator Vent					2xReformer + Olfelex	
exhaust gas flow rate		1,123 scf/min					203 scf/min						
		177 lb-mol/hr					32 lb-mol/hr						
		concentration					concentration					=G8*2+M8	=H8*2+N8
	molecular wt.	ppmv	lbmole/hr	gr/dscf	lbs/hr	tpy	ppmv	lbmole/hr	gr/dscf	lbs/hr	tpy	lbs/hr	tpy
CO	28	100	0.018		0.50	2.17	100	0.003		0.09	0.39	1.08	4.7
PM10	n/a			0.001	0.01	0.04			0.001	0.00	0.01	0.02	0.1
SO2	64	15	0.0027		0.17	0.75	14	0.0005		0.03	0.13	0.37	1.6
Cl2	71	25	0.0044		0.31	1.38	21	0.0007		0.05	0.21	0.68	3.0
HCl	36.5	60	0.0107		0.39	1.70	57	0.0018		0.07	0.29	0.84	3.7
NOx	46	10	0.0018		0.08	0.36	10	0.0003		0.01	0.06	0.18	0.8

Exhaust gas flow rates are provided per unit. Emission rates are total for all units.

Hyperion Energy Center
Emission Calculations
Cooling Tower

Water Circulation	130,000	gallons/minute
TDS	3,750	ppmw
Drift Specification	0.0005	percent of circulation rate

Pollutant	Emission Factor	Emission Rate	
		lb/hr	ton/yr [3]
PM-10 [1]	n/a	1.22	5.34
VOC [2]	.7 lb VOC/MMgal water	5.46	23.91

1 - Emissions calculated by mass balance
2 - Emission factor from AP-42 Table 5.1-2 for well-controlled systems.
3 - Annual emissions based on 8,760 hr/yr operation.

Emissions from Paved Roads

Source ID	Material Handled	Material Throughput (bbl/day)	Total Distance Roundtrip (miles)	Average Load Per Vehicle (bbl)	Potential VMT (miles/day)	Emission Factor (lb/VMT)	Maximum Short-term Emissions (lb/hr)	Potential Annual Emissions (tons/yr)
TSP	Gasoline and Propane	9,500	0.5600	190.00	28	0.706	2.470	3.606
PM10	Gasoline and Propane	9,500	0.5600	190.00	28	0.137	0.481	0.702
PM2.5	Gasoline and Propane	9,500	0.5600	190.00	28	0.020	0.071	0.104

Emission Factor (AP-42, 5th Edition, 11/06, Sec. 13.2.1, Paved Roads)

		E[1]	k[2]	sL[3]			W[4]	C[5]	p[6]	n[7]
Pollutant	Material Handled	Size Specific Emission Factor (lb/VMT)	Particle Size Multiplier (lb/VMT)	Road Surface Silt Loading (g/m2)	Average Load Per Vehicle (tons)	Unloaded Vehicle Weight (tons)	Mean Vehicle Weight (tons)	EF for 1980's vehicle exhaust, brake wear, tire wear	number of days with > 0.01 inches of precipitation	Number of days in period
TSP	Gasoline and Propane	**0.706**	0.082	0.4	25.0	14	26.5	0.00047	95	365
PM10	Gasoline and Propane	**0.137**	0.016	0.4	25.0	14	26.5	0.00047	95	365
PM2.5	Gasoline and Propane	**0.020**	0.0024	0.4	25.0	14	26.5	0.00036	95	365

Notes:

1) E (lb/VMT) = $(k\ (sL/2)^{0.65}\ (W/3)^{1.5} - C)\ (1-(p/(4*n))$	(AP-42, 5th Edition, 11/06, Chapter 13.2.1-4, equation 1)
2) k, particle size multiplier (lb/VMT)	(AP-42, 5th Edition, 11/06, Table 13.2-1.1)
3) sL, Road surface silt loading, g/m^2 =	(AP-42, 5th Edition, 11/06, Table 13.2.1-4)
4) W, mean vehicle weight (tons)	(= (Unloaded vehicle weight + Loaded vehicle weight) / 2)
5) C, EF for 1980's vehicle exhaust, brake and tire wear	(AP-42, 5th Edition, 11/06, Table 13.2.1-2)
6) p, number of days with > 0.01 inches of precipitation	(AP-42, 5th Edition, 11/06, Figure 13.2.1-2)
7) n, number of days in period	(365 days/year)

Hyperion Energy Center
Emission Calculations
Wastewater Treatment

From Water9 modeling:

	API Separator	DAF Separator	Equalization	Aeration Tanks	Total
VOC uncontrolled	70.5 lb/hr	5210.2 lb/day	0.24 lb/day	20.19 lb/day	5301.1 lb/day
Control efficiency	0.98	0.98			
VOC controlled	0.1 lb/hr	4.3 lb/hr	0.01 lb/hr	0.84 lb/hr	5.25 lb/hr
					23.00 tpy
NOx created					5.00 lb/hr
					21.90 tpy

Hyperion Energy Center
Emission Calculations
Material Handling

REFINERY FUGITIVE PM CHOPPER/CRUSHER EMISSIONS

Source Numbers	Process Description	Material	Potential Throughput (tons/hr)	Potential Throughput (tons/yr)				Emission Factor (lbs/ton)	Control Reduction (%)	Emission Factor &% Control References	Maximum Hours of Operation (hrs/yr)	Maximum Hourly Emissions (lb/hr)	Potential Annual Emissions (tons/yr)
DCU 1 Wet Coke Chopper/Crusher	Coke chopping & crushing	wet coke	172	1,505,625				1.20E-03	0%	AP-42, 5th Ed., 8/04, Stone Crushing Table 11.19.2-2 for PM from tertiary crushing controlled with moisture	8,760	0.002	0.009
DCU 2 Wet Coke Chopper/Crusher	Coke chopping & crushing	wet coke	172	1,505,625				1.20E-03	0%	AP-42, 5th Ed., 8/04, Stone Crushing Table 11.19.2-2 for PM from tertiary crushing controlled with moisture	8,760	0.002	0.009

REFINERY FUGITIVE PM DROP EMISSIONS

Source Numbers	Process Description	Material	Potential Throughput (tons/hr)	Potential Throughput (tons/yr)	k (particle size multiplier)	Mean Wind Speed (mph)	Moisture Content (%)	Emission Factor (lbs/ton)	Control Reduction (%)	Emission Factor &% Control References	Maximum Hours of Operation (hrs/yr)	Maximum Hourly Emissions (lb/hr)	Potential Annual Emissions (tons/yr)
Coke Drum DCU1-1 Coke Drum DCU1-2 Coke Drum DCU1-3 Coke Drum DCU1-4	Wet coke drop from bottom of coke drum to concrete pit	wet coke	171.9	1,505,625	0.74	11	10.0	6.93E-04	0%	AP-42, 5th Ed., 1/96, Sec. 13.2.4 - Agg. Hand. & Storage Piles for PM; no reduction credit taken for concrete wall around the pit area.	8,760	0.12	0.52
DCU1 Movement of wet coke from pit under drums to concrete pad	drop from clam shell to concrete pad or front end loader	wet coke	171.9	1,505,625	0.74	11	10.0	6.93E-04	0%	AP-42, 5th Ed., 1/96, Sec. 13.2.4 - Agg. Hand. & Storage Piles for PM; no reduction credit taken for concrete wall around the pit area.	8,760	0.12	0.52
DCU1 Drop to Chopper	drop from clam shell to chopper	wet coke	172	1,505,625	0.74	11	10.0	6.93E-04	0%	AP-42, 5th Ed., 1/96, Sec. 13.2.4 - Agg. Hand. & Storage Piles for PM	8,760	0.12	0.52
DCU1 Grinder drop to Conveyor	to Coke Storage Building Conveyor/Pile	wet coke	172	1,505,625	0.74	11	10.0	6.93E-04	0%	AP-42, 5th Ed., 1/96, Sec. 13.2.4 - Agg. Hand. & Storage Piles for PM	8,760	0.12	0.52
Coke Drum DCU2-1 Coke Drum DCU2-2 Coke Drum DCU2-3 Coke Drum DCU2-4	drop from bottom of coke drum to concrete pit	wet coke	172	1,505,625	0.74	11	10.0	6.93E-04	0%	AP-42, 5th Ed., 1/96, Sec. 13.2.4 - Agg. Hand. & Storage Piles for PM; no reduction credit taken for concrete wall around the pit area.	8,760	0.12	0.52
DCU2 Movement of wet coke from pit under drums to concrete pad	drop from clam shell to concrete pad or front end loader	wet coke	172	1,505,625	0.74	11	10.0	6.93E-04	0%	AP-42, 5th Ed., 1/96, Sec. 13.2.4 - Agg. Hand. & Storage Piles for PM; no reduction credit taken for concrete wall around the pit area.	8,760	0.12	0.52
DCU2 Drop to Chopper	drop from clam shell to chopper	wet coke	172	1,505,625	0.74	11	10.0	6.93E-04	0%	AP-42, 5th Ed., 1/96, Sec. 13.2.4 - Agg. Hand. & Storage Piles for PM	8,760	0.12	0.52
DCU2 Grinder drop to Conveyor	to Coke Storage Building Conveyor/Pile	wet coke	172	1,505,625	0.74	11	10.0	6.93E-04	0%	AP-42, 5th Ed., 1/96, Sec. 13.2.4 - Agg. Hand. & Storage Piles for PM	8,760	0.12	0.52

REFINERY CONVEYOR PM EMISSIONS

Source Numbers	Description of Source	Material Handled	Potential Throughput (tons/hr)	Potential Throughput (tons/yr)				Emission Factor (lbs/ton)	Control Reduction (%)	Emission Factor &% Control References	Maximum Hours of Operation (hrs/yr)	Maximum Hourly Emissions (lb/hr)	Potential Annual Emissions (tons/yr)
DCU 1 Drop on conveyor to storage Bldg	Wet coke drop from crusher to conveyor going to storage Bldg	wet coke	171.9	1,505,625				4.60E-05	0%	AP-42, 5th Ed., 8/04, Stone Crushing Table 11.19.2-2 for PM from controlled conveyor transfer	8,760	0.008	0.035
DCU 2 Drop on conveyor to storage Bldg	Wet coke drop from crusher to conveyor going to storage Bldg	wet coke	171.9	1,505,625				4.60E-05	0%	AP-42, 5th Ed., 8/04, Stone Crushing Table 11.19.2-2 for PM from controlled conveyor transfer	8,760	0.008	0.035
													4.263

Hyperion Energy Center
Emission Calculations
Material Handling

IGCC POWER PLANT BAGHOUSE & DUST COLLECTOR PM EMISSIONS

Source Numbers	Description of Source	Material Handled	Dust Collector Flowrate (acfm)	Temp. (^oF)	Dust Collector Flowrate (dscfm)	PM/PM10 Emissions (gr/dscf)				Emission Factor &% Control References	Maximum Hours of Operation (hrs/yr)	Maximum Hourly Emissions (lbs/hr)	Maximum Annual Emissions (tons/yr)
Coke Storage Bldg	North FF-1	coke/coal	60,000	100	56,584	0.005					8,760	2.43	10.62
Coke Storage Bldg	North FF-2	coke/coal	60,000	100	56,584	0.005					8,760	2.43	10.62
Coke Storage Bldg	South FF-1	coke/coal	60,000	100	56,584	0.005					8,760	2.43	10.62
Coke Storage Bldg	South FF-2	coke/coal	60,000	100	56,584	0.005					8,760	2.43	10.62
Coal/Coke Unloading Bldg	Rail Unloading Bldg	coke/coal	20,000	80	19,557	0.005					8,760	0.84	3.67
Flux Unloading Bldg	Rail Unloading Bldg	flux	10,000	80	9,779	0.005					8,760	0.42	1.84
Slag loading Bldg	Rail Loading Bldg	slag	10,000	80	9,779	0.005					8,760	0.42	1.84

IGCC POWER PLANT FUGITIVE PM DROP EMISSIONS

Source Numbers	Process Description	Material	Potential Throughput (tons/hr)	Potential Throughput (tons/yr)	k (particle size multiplier)	Mean Wind Speed (mph)	Moisture Content (%)	Emission Factor (lbs/ton)	Control Reduction (%)	Emission Factor &% Control References	Maximum Hours of Operation (hrs/yr)	Maximum Hourly Emissions (lb/hr)	Potential Annual Emissions (tons/yr)
Slag drop into truck	slag drop into dump truck	wet/dry slag	8	69,498	0.74	11	4.0	2.50E-03	0%	AP-42, 5th Ed., 1/96, Sec. 13.2.4 - Agg. Hand. & Storage Piles for PM	8,760	0.02	0.09
Flux drop into conveyor shut	Flux drop at truck dump	dry flux	16	138,995	0.74	11	4.0	2.50E-03	0%	AP-42, 5th Ed., 1/96, Sec. 13.2.4 - Agg. Hand. & Storage Piles for PM	8,760	0.04	0.17

IGCC POWER PLANT CONVEYOR PM EMISSIONS

Source Numbers	Description of Source	Material Handled	Potential Throughput (tons/hr)	Potential Throughput (tons/yr)				Emission Factor (lbs/ton)	Control Reduction (%)	Emission Factor &% Control References	Maximum Hours of Operation (hrs/yr)	Maximum Hourly Emissions (lb/hr)	Potential Annual Emissions (tons/yr)
Railcar Unloading drop to conveyor	Coke/Coal drop from railcar to conveyor to storage building	dry coke/coal	61.9	542,621				4.60E-05	0%	AP-42, 5th Ed., 8/04, Stone Crushing Table 11.19.2-2 for PM from controlled conveyor transfer	8,760	0.003	0.012
Railcar Unloading conveyor drop in storage Bldg	Coke/Coal drop from conveyor in storage building	dry coke/coal	61.9	542,621				4.60E-05	0%	AP-42, 5th Ed., 8/04, Stone Crushing Table 11.19.2-2 for PM from controlled conveyor transfer	8,760	0.003	0.012
Storage Bldg to Feed Prep	Coke/Coal drop from conveyor to Feed Prep	wet coke/coal	61.9	542,621				4.60E-05	0%	AP-42, 5th Ed., 8/04, Stone Crushing Table 11.19.2-2 for PM from controlled conveyor transfer	8,760	0.003	0.012
Slag drop/conveying to truck	slag drop to conveyor	wet/dry slag	61.9	542,621				4.60E-05	0%	AP-42, 5th Ed., 8/04, Stone Crushing Table 11.19.2-2 for PM from controlled conveyor transfer	8,760	0.003	0.012
Flux conveyor drop in storage Bldg	Flux drop in storage bldg	dry flux	61.9	542,621				4.60E-05	0%	AP-42, 5th Ed., 8/04, Stone Crushing Table 11.19.2-2 for PM from controlled conveyor transfer	8,760	0.003	0.012
													50.15

Hyperion Energy Center
Emission Calculations
Material Handling

REFINERY FUGITIVE PM-10 CHOPPER/CRUSHER EMISSIONS

Source Numbers	Process Description	Material	Potential Throughput (tons/hr)	Potential Throughput (tons/yr)				Emission Factor (lbs/ton)	Control Reduction (%)	Emission Factor &% Control References	Maximum Hours of Operation (hrs/yr)	Maximum Hourly Emissions (lb/hr)	Potential Annual Emissions (tons/yr)
DCU 1 Wet Coke Chopper/Crusher	Coke chopping & crushing	wet coke	172	1,505,625				1.20E-03	0%	AP-42, 5th Ed., 8/04, Stone Crushing Table 11.19.2-2 for PM from tertiary crushing controlled with moisture	8,760	0.002	0.009
DCU 2 Wet Coke Chopper/Crusher	Coke chopping & crushing	wet coke	172	1,505,625				1.20E-03	0%	AP-42, 5th Ed., 8/04, Stone Crushing Table 11.19.2-2 for PM from tertiary crushing controlled with moisture	8,760	0.002	0.009

REFINERY FUGITIVE PM-10 DROP EMISSIONS

Source Numbers	Process Description	Material	Potential Throughput (tons/hr)	Potential Throughput (tons/yr)	k (particle size multiplier)	Mean Wind Speed (mph)	Moisture Content (%)	Emission Factor (lbs/ton)	Control Reduction (%)	Emission Factor &% Control References	Maximum Hours of Operation (hrs/yr)	Maximum Hourly Emissions (lb/hr)	Potential Annual Emissions (tons/yr)
Coke Drum DCU1-1 Coke Drum DCU1-2 Coke Drum DCU1-3 Coke Drum DCU1-4	Wet coke drop from bottom of coke drum to concrete pit	wet coke	171.9	1,505,625	0.35	11	10.0	3.28E-04	0%	AP-42, 5th Ed., 1/96, Sec. 13.2.4 - Agg. Hand. & Storage Piles for PM; no reduction credit taken for concrete wall around the pit area.	8,760	0.06	0.25
DCU1 Movement of wet coke from pit under drums to concrete pad	drop from clam shell to concrete pad or front end loader	wet coke	171.9	1,505,625	0.35	11	10.0	3.28E-04	0%	AP-42, 5th Ed., 1/96, Sec. 13.2.4 - Agg. Hand. & Storage Piles for PM; no reduction credit taken for concrete wall around the pit area.	8,760	0.06	0.25
DCU1 Drop to Chopper	drop from clam shell to chopper	wet coke	172	1,505,625	0.35	11	10.0	3.28E-04	0%	AP-42, 5th Ed., 1/96, Sec. 13.2.4 - Agg. Hand. & Storage Piles for PM	8,760	0.06	0.25
DCU1 Grinder drop to Conveyor	to Coke Storage Building Conveyor/Pile	wet coke	172	1,505,625	0.35	11	10.0	3.28E-04	0%	AP-42, 5th Ed., 1/96, Sec. 13.2.4 - Agg. Hand. & Storage Piles for PM	8,760	0.06	0.25
Coke Drum DCU2-1 Coke Drum DCU2-2 Coke Drum DCU2-3 Coke Drum DCU2-4	drop from bottom of coke drum to concrete pit	wet coke	172	1,505,625	0.35	11	10.0	3.28E-04	0%	AP-42, 5th Ed., 1/96, Sec. 13.2.4 - Agg. Hand. & Storage Piles for PM; no reduction credit taken for concrete wall around the pit area.	8,760	0.06	0.25
DCU2 Movement of wet coke from pit under drums to concrete pad	drop from clam shell to concrete pad or front end loader	wet coke	172	1,505,625	0.35	11	10.0	3.28E-04	0%	AP-42, 5th Ed., 1/96, Sec. 13.2.4 - Agg. Hand. & Storage Piles for PM; no reduction credit taken for concrete wall around the pit area.	8,760	0.06	0.25
DCU2 Drop to Chopper	drop from clam shell to chopper	wet coke	172	1,505,625	0.35	11	10.0	3.28E-04	0%	AP-42, 5th Ed., 1/96, Sec. 13.2.4 - Agg. Hand. & Storage Piles for PM	8,760	0.06	0.25
DCU2 Drop from Conveyor	to Coke Storage Building Conveyor/Pile	wet coke	172	1,505,625	0.35	11	10.0	3.28E-04	0%	AP-42, 5th Ed., 1/96, Sec. 13.2.4 - Agg. Hand. & Storage Piles for PM	8,760	0.06	0.25

REFINERY CONVEYOR PM-10 EMISSIONS

Source Numbers	Description of Source	Material	Potential Throughput (tons/hr)	Potential Throughput (tons/yr)				Emission Factor (lbs/ton)	Control Reduction (%)	Emission Factor &% Control References	Maximum Hours of Operation (hrs/yr)	Maximum Hourly Emissions (lb/hr)	Potential Annual Emissions (tons/yr)
DCU 1 Drop on conveyor to storage Bldg	Wet coke drop from crusher to conveyor going to storage Bldg	wet coke	171.9	1,505,625				4.60E-05	0%	AP-42, 5th Ed., 8/04, Stone Crushing Table 11.19.2-2 for PM from controlled conveyor transfer	8,760	0.008	0.035
DCU 2 Drop on conveyor to storage Bldg	Wet coke drop from crusher to conveyor going to storage Bldg	wet coke	171.9	1,505,625				4.60E-05	0%	AP-42, 5th Ed., 8/04, Stone Crushing Table 11.19.2-2 for PM from controlled conveyor transfer	8,760	0.008	0.035
													2.062

Hyperion Energy Center
Emission Calculations
Material Handling

IGCC POWER PLANT BAGHOUSE & DUST COLLECTOR PM-10 EMISSIONS

Source Numbers	Description of Source	Material Handled	Dust Collector Flowrate (acfm)	Temp. (oF)	Dust Collector Flowrate (dscfm)	PM/PM10 Emissions (gr/dscf)				Emission Factor &% Control References	Maximum Hours of Operation (hrs/yr)	Maximum Hourly Emissions (lbs/hr)	Maximum Annual Emissions (tons/yr)
Coke Storage Bldg	North FF-1	coke/coal	60,000	100	56,584	0.005					8,760	2.43	10.62
Coke Storage Bldg	North FF-2	coke/coal	60,000	100	56,584	0.005					8,760	2.43	10.62
Coke Storage Bldg	South FF-1	coke/coal	60,000	100	56,584	0.005					8,760	2.43	10.62
Coke Storage Bldg	South FF-2	coke/coal	60,000	100	56,584	0.005					8,760	2.43	10.62
Coal/Coke Unloading Bldg	Rail Unloading Bldg	coke/coal	20,000	80	19,557	0.005					8,760	0.84	3.67
Flux Unloading Bldg	Rail Unloading Bldg	flux	10,000	80	9,779	0.005					8,760	0.42	1.84
Slag loading Bldg	Rail Loading Bldg	slag	10,000	80	9,779	0.005					8,760	0.42	1.84

IGCC POWER PLANT FUGITIVE PM-10 DROP EMISSIONS

Source Numbers	Process Description	Material	Potential Throughput (tons/hr)	Potential Throughput (tons/yr)	k (particle size multiplier)	Mean Wind Speed (mph)	Moisture Content (%)	Emission Factor (lbs/ton)	Control Reduction (%)	Emission Factor &% Control References	Maximum Hours of Operation (hrs/yr)	Maximum Hourly Emissions (lb/hr)	Potential Annual Emissions (tons/yr)
Slag drop into truck	slag drop into dump truck	wet/dry slag	8	69,498	0.35	11	4.0	1.18E-03	0%	AP-42, 5th Ed., 1/96, Sec. 13.2.4 - Agg. Hand. & Storage Piles for PM	8,760	0.01	0.04
Flux drop into conveyor shut	Flux drop at truck dump	dry flux	16	138,995	0.35	11	4.0	1.18E-03	0%	AP-42, 5th Ed., 1/96, Sec. 13.2.4 - Agg. Hand. & Storage Piles for PM	8,760	0.02	0.08

IGCC POWER PLANT CONVEYOR PM-10 EMISSIONS

Source Numbers	Description of Source	Material	Potential Throughput (tons/hr)	Potential Throughput (tons/yr)				Emission Factor (lbs/ton)	Control Reduction (%)	Emission Factor &% Control References	Maximum Hours of Operation (hrs/yr)	Maximum Hourly Emissions (lb/hr)	Potential Annual Emissions (tons/yr)
Railcar Unloading drop to conveyor	Coke/Coal drop from railcar to conveyor to storage building	dry coke/coal	61.9	542,621				4.60E-05	0%	AP-42, 5th Ed., 8/04, Stone Crushing Table 11.19.2-2 for PM from controlled conveyor transfer	8,760	0.003	0.012
Railcar Unloading conveyor drop in storage Bldg	Coke/Coal drop from conveyor in storage building	dry coke/coal	61.9	542,621				4.60E-05	0%	AP-42, 5th Ed., 8/04, Stone Crushing Table 11.19.2-2 for PM from controlled conveyor transfer	8,760	0.003	0.012
Storage Bldg to Feed Prep	Coke/Coal drop from conveyor to Feed Prep	wet coke/coal	61.9	542,621				4.60E-05	0%	AP-42, 5th Ed., 8/04, Stone Crushing Table 11.19.2-2 for PM from controlled conveyor transfer	8,760	0.003	0.012
Slag drop/conveying to truck	slag drop to conveyor	wet/dry slag	61.9	542,621				4.60E-05	0%	AP-42, 5th Ed., 8/04, Stone Crushing Table 11.19.2-2 for PM from controlled conveyor transfer	8,760	0.003	0.012
Flux conveyor drop in storage Bldg	Flux drop in storage bldg	dry flux	61.9	542,621				4.60E-05	0%	AP-42, 5th Ed., 8/04, Stone Crushing Table 11.19.2-2 for PM from controlled conveyor transfer	8,760	0.003	0.012
													50.01

Hyperion Energy Center
Emission Calculations
Equipment Leaks

			Total Amount	Leak Definition	Number Leakers	Emission Factor (kg/hr/source)	Emissions from Leakers (lb/yr)	Number of Non-leakers at Leak Definition	Emission Factor (kg/hr/source)	Emissions from Non-leakers at Leak Definition (lb/yr)	Number of Non-leakers at Default Zero	Emission Factor (kg/hr/source)	Emissions from Non-leakers at Default Zero (lb/yr)	Total Emissions (lb/yr)	Total Emissions (tpy)
Petroleum Refinery Annual VOC Fugitive Emission Estimates															
Gas	Compressor Seals		59	500	0.59	3.09E-03	3.51E+01	58.41	5.29E-04	5.96E+02	0	4.00E-06	0.00E+00	631	0.3
	Connectors	> 2"	18,072	100	54.21465	2.99E-03	3.13E+03	180.7155	1.17E-04	4.09E+02	17836.61985	3.10E-07	1.07E+02	3,644	1.8
	Valves	> 2"	4,997	100	14.99145	2.21E-03	6.38E+02	49.9715	7.11E-05	6.85E+01	4932.18705	7.80E-06	7.42E+02	1,449	0.7
	Sample Connections		108	500	1.08	3.09E-03	6.43E+01	1.08	5.29E-04	1.10E+01	105.84	4.00E-06	8.17E+00	84	0.0
	Relief Valves		31	500	0.31	3.09E-03	1.85E+01	0.31	5.29E-04	3.16E+00	30.38	4.00E-06	2.34E+00	24	0.0
	Open Ended Lines		183	500	1.83	1.44E-03	5.09E+01	1.83	1.75E-04	6.17E+00	179.34	2.00E-06	6.92E+00	64	0.0
Lght Liq	Pump Seals		450	500	4.5	1.39E-02	1.20E+03	222.75	2.23E-03	9.58E+03	222.75	2.40E-05	1.03E+02	10,883	5.4
	Connectors	> 2"	17,379	100	52.1355	2.99E-03	3.01E+03	173.785	1.17E-04	3.94E+02	17152.5795	3.10E-07	1.03E+02	3,504	1.8
	Valves	> 2"	5,411	100	16.23375	2.21E-03	6.91E+02	54.1125	7.11E-05	7.42E+01	5340.90375	7.80E-06	8.04E+02	1,569	0.8
	Sample Connections		183	500	1.8325	3.09E-03	1.09E+02	1.8325	5.29E-04	1.87E+01	179.585	4.00E-06	1.39E+01	142	0.1
	Relief Valves		0	500	0	3.09E-03	0.00E+00	0	5.29E-04	0.00E+00	0	4.00E-06	0.00E+00	0	0.0
	Open Ended Lines		88	500	0.884	1.44E-03	2.46E+01	0.884	1.75E-04	2.98E+00	86.632	2.00E-06	3.34E+00	31	0.0
Hvy Liq	Pump Seals		284	500	2.837	1.39E-02	7.58E+02	2.837	2.23E-03	1.22E+02	278.026	2.40E-05	1.29E+02	1,009	0.5
	Connectors	> 2"	18,309	500	183.088	2.99E-03	1.06E+04	183.088	3.64E-04	1.29E+03	17942.624	3.10E-07	1.07E+02	11,957	6.0
	Valves	> 2"	5,750	500	57.5025	2.21E-03	2.45E+03	57.5025	2.36E-04	2.62E+02	5635.245	7.80E-06	8.48E+02	3,559	1.8
	Sample Connection		67	500	0.672	3.09E-03	4.00E+01	0.672	5.29E-04	6.86E+00	65.856	4.00E-06	5.08E+00	52	0.0
	Relief Valves		0	500	0	3.09E-03	0.00E+00	0	5.29E-04	0.00E+00	0	4.00E-06	0.00E+00	0	0.0
	Open Ended Lines		14	500	0.142	1.44E-03	3.95E+00	0.142	1.75E-04	4.79E-01	13.916	2.00E-06	5.37E-01	5	0.0
Petroleum Refinery Annual H_2S Fugitive Emission Estimates															
Gas	Compressor Seals		0	500	0	1.36E-03	0.00E+00	0	5.29E-04	0.00E+00	0	4.00E-06	0.00E+00	0	0.0
	Connectors	> 2"	684	500	3.42	1.13E-03	7.45E+01	338.58	3.64E-04	2.38E+03	342	3.10E-07	2.05E+00	2,454	1.2
	Valves	> 2"	132	500	0.66	7.85E-04	9.99E+00	65.34	2.36E-04	2.98E+02	66	7.80E-06	9.93E+00	318	0.2
	Sample Connections		108	500	0.54	1.36E-03	1.42E+01	53.46	5.29E-04	5.45E+02	54	4.00E-06	4.17E+00	564	0.3
	Relief Valves		0	500	0	1.36E-03	0.00E+00	0	5.29E-04	0.00E+00	0	4.00E-06	0.00E+00	0	0.0
	Open Ended Lines		6	500	0.03	5.43E-04	3.14E-01	2.97	1.75E-04	1.00E+01	3	2.00E-06	1.16E-01	10	0.0
Lght Liq	Pump Seals		18	500	0.09	5.95E-03	1.03E+01	8.91	2.23E-03	3.83E+02	9	2.40E-05	4.17E+00	398	0.2
	Connectors	> 2"	414	500	2.07	1.13E-03	4.51E+01	204.93	3.64E-04	1.44E+03	207	3.10E-07	1.24E+00	1,486	0.7
	Valves	> 2"	120	500	0.6	7.85E-04	9.08E+00	59.4	2.36E-04	2.71E+02	60	7.80E-06	9.03E+00	289	0.1
	Sample Connections		6	500	0.03	1.36E-03	7.90E-01	2.97	5.29E-04	3.03E+01	3	4.00E-06	2.32E-01	31	0.0
	Relief Valves		0	500	0	1.36E-03	0.00E+00	0	5.29E-04	0.00E+00	0	4.00E-06	0.00E+00	0	0.0
	Open Ended Lines		0	500	0	5.43E-04	0.00E+00	0	1.75E-04	0.00E+00	0	2.00E-06	0.00E+00	0	0.0
Hvy Liq	Pump Seals		30	500	0.15	5.95E-03	1.72E+01	14.85	2.23E-03	6.38E+02	15	2.40E-05	6.95E+00	663	0.3
	Connectors	> 2"	936	500	4.68	1.13E-03	1.02E+02	463.32	3.64E-04	3.25E+03	468	3.10E-07	2.80E+00	3,359	1.7
	Valves	> 2"	264	500	1.32	7.85E-04	2.00E+01	130.68	2.36E-04	5.96E+02	132	7.80E-06	1.99E+01	635	0.3
	Sample Connection		18	500	0.09	1.36E-03	2.37E+00	8.91	5.29E-04	9.09E+01	9	4.00E-06	6.95E-01	94	0.0
	Relief Valves		0	500	0	1.36E-03	0.00E+00	0	5.29E-04	0.00E+00	0	4.00E-06	0.00E+00	0	0.0
	Open Ended Lines		0	500	0	5.43E-04	0.00E+00	0	1.75E-04	0.00E+00	0	2.00E-06	0.00E+00	0	0.0

Hyperion Energy Center
Emission Calculations
Equipment Leaks

			Total Amount	Leak Definition	Number Leakers	Emission Factor (kg/hr/source)	Emissions from Leakers (lb/yr)	Number of Non-leakers at Leak Definition	Emission Factor (kg/hr/source)	Emissions from Non-leakers at Leak Definition (lb/yr)	Number of Non-leakers at Default Zero	Emission Factor (kg/hr/source)	Emissions from Non-leakers at Default Zero (lb/yr)	Total Emissions (lb/yr)	Total Emissions (tpy)
IGCC Power Plant Annual VOC Fugitive Emission Estimates															
Gas	Compressor Seals			500	0	3.09E-03	0.00E+00	0	5.29E-04	0.00E+00	0	4.00E-06	0.00E+00	0	0.0
	Connectors	> 2"	3,474	100	10.422	2.99E-03	6.01E+02	34.74	1.17E-04	7.87E+01	3428.838	3.10E-07	2.05E+01	701	0.4
	Valves	> 2"	893	100	2.679	2.21E-03	1.14E+02	8.93	7.11E-05	1.22E+01	881.391	7.80E-06	1.33E+02	259	0.1
	Process Drains		5	500	0.05	3.09E-03	2.98E+00	0.05	5.29E-04	5.10E-01	4.9	4.00E-06	3.78E-01	4	0.0
	Relief Valves		28	500	0.28	3.09E-03	1.67E+01	0.28	5.29E-04	2.86E+00	27.44	4.00E-06	2.12E+00	22	0.0
	Open Ended Lines		98	500	0.98	1.44E-03	2.72E+01	0.98	1.75E-04	3.31E+00	96.04	2.00E-06	3.71E+00	34	0.0
Lght Liq	Pump Seals		72	500	0.72	1.39E-02	1.92E+02	35.64	2.23E-03	1.53E+03	35.64	2.40E-05	1.65E+01	1,741	0.9
	Connectors	> 2"	7,094	100	21.282	2.99E-03	1.23E+03	70.94	1.17E-04	1.61E+02	7001.778	3.10E-07	4.19E+01	1,430	0.7
	Valves	> 2"	1,984	100	5.952	2.21E-03	2.53E+02	19.84	7.11E-05	2.72E+01	1958.208	7.80E-06	2.95E+02	575	0.3
	Process Drains		608	500	6.08	3.09E-03	3.62E+02	6.08	5.29E-04	6.20E+01	595.84	4.00E-06	4.60E+01	470	0.2
	Relief Valves		14	500	0.14	3.09E-03	8.34E+00	0.14	5.29E-04	1.43E+00	13.72	4.00E-06	1.06E+00	11	0.0
	Open Ended Lines		12	500	0.12	1.44E-03	3.33E+00	0.12	1.75E-04	4.05E-01	11.76	2.00E-06	4.54E-01	4	0.0
Hvy Liq	Pump Seals		36	500	0.36	1.39E-02	9.62E+01	0.36	2.23E-03	1.55E+01	35.28	2.40E-05	1.63E+01	128	0.1
	Connectors	> 2"	3,309	500	33.09	2.99E-03	1.91E+03	33.09	3.64E-04	2.32E+02	3242.82	3.10E-07	1.94E+01	2,161	1.1
	Valves	> 2"	897	500	8.97	2.21E-03	3.82E+02	8.97	2.36E-04	4.09E+01	879.06	7.80E-06	1.32E+02	555	0.3
	Process Drains		144	500	1.44	3.09E-03	8.58E+01	1.44	5.29E-04	1.47E+01	141.12	4.00E-06	1.09E+01	111	0.1
	Relief Valves		27	500	0.27	3.09E-03	1.61E+01	0.27	5.29E-04	2.75E+00	26.46	4.00E-06	2.04E+00	21	0.0
	Open Ended Lines		177	500	1.77	1.44E-03	4.92E+01	1.77	1.75E-04	5.97E+00	173.46	2.00E-06	6.69E+00	62	0.0
IGCC Power Plant Annual H_2S Fugitive Emission Estimates															
Gas	Compressor Seals		0	500	0	1.36E-03	0.00E+00	0	5.29E-04	0.00E+00	0	4.00E-06	0.00E+00	0	0.0
	Connectors	> 2"	3,474	500	17.37	1.13E-03	1.39E+01	1719.63	3.64E-04	4.45E+02	1737	3.10E-07	3.83E-01	460	0.2
	Valves	> 2"	893	500	4.465	7.85E-04	2.68E+00	442.035	2.36E-04	7.97E+01	446.5	7.80E-06	2.66E+00	85	0.0
	Process Drains		5	500	0.025	1.36E-03	7.13E-02	2.475	5.29E-04	2.74E+00	2.5	4.00E-06	2.09E-02	3	0.0
	Relief Valves		28	500	0.14	1.36E-03	1.87E-01	13.86	5.29E-04	7.19E+00	14	4.00E-06	5.50E-02	7	0.0
	Open Ended Lines		98	500	0.49	5.43E-04	3.63E-01	48.51	1.75E-04	1.16E+01	49	2.00E-06	1.34E-01	12	0.0
Lght Liq	Pump Seals		72	500	0.36	5.95E-03	4.80E-02	35.64	2.23E-03	1.78E+00	36	2.40E-05	1.94E-02	2	0.0
	Connectors	> 2"	7,094	500	35.47	1.13E-03	8.17E-01	3511.53	3.64E-04	2.61E+01	3547	3.10E-07	2.24E-02	27	0.0
	Valves	> 2"	1,984	500	9.92	7.85E-04	1.74E-01	982.08	2.36E-04	5.18E+00	992	7.80E-06	1.73E-01	6	0.0
	Process Drains		608	500	3.04	1.36E-03	1.08E-01	300.96	5.29E-04	4.13E+00	304	4.00E-06	3.15E-02	4	0.0
	Relief Valves		14	500	0.07	1.36E-03	1.17E-03	6.93	5.29E-04	4.48E-02	7	4.00E-06	3.43E-04	0	0.0
	Open Ended Lines		12	500	0.06	5.43E-04	5.12E-04	5.94	1.75E-04	1.63E-02	6	2.00E-06	1.89E-04	0	0.0
Hvy Liq	Pump Seals		36	500	0.18	5.95E-03	1.82E-02	17.82	2.23E-03	6.76E-01	18	2.40E-05	7.35E-03	1	0.0
	Connectors	> 2"	3,309	500	16.545	1.13E-03	4.55E-01	1637.955	3.64E-04	1.45E+01	1654.5	3.10E-07	1.25E-02	15	0.0
	Valves	> 2"	897	500	4.485	7.85E-04	9.04E-02	444.015	2.36E-04	2.69E+00	448.5	7.80E-06	8.98E-02	3	0.0
	Process Drains		144	500	0.72	1.36E-03	2.39E-02	71.28	5.29E-04	9.19E-01	72	4.00E-06	7.02E-03	1	0.0
	Relief Valves		27	500	0.135	1.36E-03	4.58E-03	13.365	5.29E-04	1.76E-01	13.5	4.00E-06	1.34E-03	0	0.0
	Open Ended Lines		177	500	0.885	5.43E-04	1.18E-02	87.615	1.75E-04	3.76E-01	88.5	2.00E-06	4.35E-03	0	0.0

Hyperion Energy Center
Emission Calculations
Gasification

Service	Max. Firing Rate [MMBtu/hr] (LHV)	Max. Firing Rate [MMBtu/hr] (HHV)	Operation (hrs/yr)	Pollutant	lb/MMBtu	Emission Rate [#/hr]	Emission Rate [ton/yr]
Gasifier Startup Burners	16.4	18.00	1,344	NOx	0.068	1.2	0.8
				SO2	0.0063	0.1	0.08
				CO	0.37	6.7	4.5
				VOC	0.14	2.5	1.7
				PM10	0.0061	0.1	0.07
				PM	0.0015	0.0	0.02
				H2SO4	0.00011	0.0	0.00
				Org HAP	0.0047	0.1	0.06
Gasification Flare Pilot	0.9	1.00	8,760	NOx	0.068	0.1	0.3
				SO2	0.0063	0.01	0.03
				CO	0.37	0.4	1.6
				VOC	0.14	0.1	0.6
				PM10	0.0220	0.02	0.10
				PM	0.0056	0.01	0.02
				H2SO4	0.0001	0.00	0.00
				Org HAP	0.0047	0.00	0.02
Gasification Flare Events	677.53	786.43	189	NOx	0.068	53.5	5.1
				SO2	0.0200	15.7	1.49
				CO	0.37	291.0	27.5
				VOC	0.14	110.1	10.4
				PM10	0.0061	4.8	0.45
				PM	0.0015	1.2	0.11
				H2SO4	0.0003	0.3	0.03
				Org HAP	0.0047	3.7	0.35

Notes:
1. Heat input rate is provided for one unit; emission rates are provided for all units in total.

Gasifier Acid Gas Removal System Vent (CO2 Vent)	exhaust gas flow rate = 283,673 scf/min; 44,790 lb-mol/hr					
		molecular wt.	concentration ppmv	lbmole/hr	lbs/hr	tpy
	CO	28.0	20	0.896	25.09	109.90
	H2S	34.1	3	0.123	4.18	18.31

Hyperion Energy Center
Emission Calculations
Combined Cycle Gas Turbines

# of Units [1]	Fuel	Max. Firing Rate [MMBtu/hr]		Pollutant	lb/MMBtu	Emission Rate	
		(LHV)	(HHV)			[#/hr]	[ton/yr]
4	Syngas	1339.2	1677.4	NOx	0.0109	72.9	319.4
				SO2	0.0063	42.3	185.4
				CO	0.0066	44.4	194.4
				VOC	0.0017	11.4	50.0
				PM10	0.0220	147.6	646.5
				PM	0.0056	37.4	163.8
				H2SO4	0.0006	3.7	16.2
				Org HAP	0.00090	6.0	26.4
				Hg	0.00000059	0.0039	0.017
				NH3	0.0067	44.9	196.7
4	Diesel	1339.2	1677.4	NOx	0.0228	153.1	38.3
				SO2	0.0016	10.6	2.6
				CO	0.0066	44.4	11.1
				VOC	0.0017	11.4	2.9
				PM10	0.0220	147.6	36.9
				PM	0.0056	37.4	9.3
				H2SO4	0.0006	3.7	0.9
				Org HAP	0.00084	5.6	1.4
				Hg	0.00000081	0.0054	0.0014
				NH3	0.0067	44.9	11.2
4	Worst-Case [2]	1339.2	1677.4	NOx	0.0228	153.1	339.4
				SO2	0.0063	42.3	185.4
				CO	0.0066	44.4	194.4
				VOC	0.0017	11.4	50.0
				PM10	0.0220	147.6	646.5
				PM	0.0056	37.4	163.8
				H2SO4	0.0006	3.7	16.2
				Org HAP	0.0009	6.0	26.4
				Hg	0.00000081	0.005	0.018
				NH3	0.0067	44.9	196.7

Notes:
1. Heat input rate is provided for one unit; emission rates are provided for all units in total.
2. In the case of pollutants for which the diesel firing emission factor is higher, the annual emissions are calculated assuming 500 hrs/yr diesel firing and 8260 hrs/yr gas firing

Hyperion Energy Center
Emission Calculations
Diesel Engines

	units	kW	hrs/yr	kWh/yr	
Fire water pump 1	1	2250	300	675,000	
Fire water pump 2	1	2250	300	675,000	
Generator 1	1	600	300	180,000	
Generator 2	1	600	300	180,000	
Generator 3	1	600	300	180,000	
Generator 4	1	600	300	180,000	
	g/kWh				
	NOx	CO	SO2	VOC	PM
Fire water pump 1	6.4	3.5	0.0074	0.33	0.2
Fire water pump 2	6.4	3.5	0.0074	0.33	0.2
Generator 1	6.4	3.5	0.0074	0.33	0.2
Generator 2	6.4	3.5	0.0074	0.33	0.2
Generator 3	6.4	3.5	0.0074	0.33	0.2
Generator 4	6.4	3.5	0.0074	0.33	0.2
	hourly lb/hr				
	NOx	CO	SO2	VOC	PM
Fire water pump 1	31.75	17.36	0.04	1.64	0.99
Fire water pump 2	31.75	17.36	0.04	1.64	0.99
Generator 1	8.47	4.63	0.01	0.44	0.26
Generator 2	8.47	4.63	0.01	0.44	0.26
Generator 3	8.47	4.63	0.01	0.44	0.26
Generator 4	8.47	4.63	0.01	0.44	0.26
Totals	**97.4**	**53.2**	**0.1**	**5.0**	**3.0**
	annual tons/yr				
	NOx	CO	SO2	VOC	PM
Fire water pump 1	1.09	0.59	0.0013	0.056	0.034
Fire water pump 2	1.09	0.59	0.0013	0.056	0.034
Generator 1	0.29	0.16	0.0003	0.015	0.009
Generator 2	0.29	0.16	0.0003	0.015	0.009
Generator 3	0.29	0.16	0.0003	0.015	0.009
Generator 4	0.29	0.16	0.0003	0.015	0.009
Totals	**3.33**	**1.82**	**0.00**	**0.17**	**0.10**

Appendix D

Economic Impact Data for BACT Analyses

Hyperion Energy Center
Economic Impacts for BACT
Heater SCR Systems

PARAMETER	UNITS	Hydrocracker Rxn Section Stage 1 Recycle Gas Heater Train 1 or 2 or 3	Hydrocracker Rxn Section Stage 2 Recycle Gas Heater Trains 1-2	Hydrocracker Rxn Section Stage 1 Recycle Gas Heater Trains 1-3
Heater Data	MMBtu/hr	66.9	129.8	200.6
Flue Gas Data				
Flow Rate	scfm	12,953	25,147	38,858
	lb/hr wet	57,175	111,005	171,525
	dscfm	10,746	20,864	32,238
	lb/hr dry	50,886	98,795	152,657
MWw		27.88	27.88	27.88
MWd		29.91	29.91	29.91
Max SO3	m/hr	0.004	0.008	0.012
	lbs/hr	0.327	0.635	0.981
Normal SO3	m/hr	0.001	0.003	0.004
Max SO2	m/hr	0.023	0.044	0.068
Normal SO2	m/hr	0.007	0.014	0.021
SCR DATA				
Inlet NOx	lb/MMBtu	0.0250	0.0250	0.0250
	lb/hr	1.672	3.245	5.015
	ppmdvd (NO2)	18	18	18
Inlet Temp.	oF	650	525	650
Pressure drop	in water	3.5	3.5	3.5
Removal	%	76	76	76
Outlet NOx	lb/MMBtu	0.0060	0.0060	0.0060
	lb/hr	0.4	0.8	1.2
	tons/yr	1.8	3.4	5.3
	ppmdvd (NO2)	4.3	4.3	4.3
Ammonia				
	molar ratio	1.00	1.00	1.00
	m/hr	0.03	0.06	0.10
	lb/hr	0.56	1.08	1.67
Ammonia slip				
	ppmvd	2.5	2.5	2.5
	m/hr	0.00	0.01	0.01
	lb/hr	0.1	0.1	0.2
	tons/yr	0.3	0.6	1.0
Increased PM 2.5 Emissions				
	lb/hr	0.4	0.8	1.2
	tons/yr	1.8	3.4	5.3
SCR Capital Costs				
SCR Unit	$	101,165	130,507	163,496
Ammonia skid	$	75,000	75,000	75,000
Piping	$	in inst.	in inst.	in inst.
10,000 gal Tank	$	450,000	450,000	450,000
Electrical	$	in skids	in skids	in skids
Structural	$	128,306	148,336	170,855
Foundations	$	350,000	350,000	350,000
Platforms	$	in str.	in str.	in str.
Installation	$	406,463	436,086	469,390
Total Capital $	1.092	$1,650,345	$1,736,629	$1,833,635
SCR Annual Costs		$/yr	$/yr	$/yr
CR @	0.094	$155,781	$163,926	$173,082
Catalyst @	0.381	$83,849	$88,233	$93,161
Ammonia @	600	$1,623	$3,152	$4,870
Fuel Penalty @	10	$87,855	$170,572	$263,566
O&M Costs	0.04	$66,014	$69,465	$73,345
Total Annual $		$395,122	$495,347	$608,025
SCR $/Ton				
Tons NOx reduced		5.6	10.8	16.7
$/ton		71,012	45,853	36,425

Hyperion Energy Center

Economic Impacts for BACT

Refinery Fuel Gas Desulfurization

PARAMETERS			
	MDEA	SELEXOL	RECTISOL
REFINERY GAS SULFUR CONTENT, PPMV	35.0	10.0	1.0
ECONOMIC IMPACTS (relative to baseline)			
Total Capital Requirement:	Baseline	$15,387,117	$44,695,913
Annual O&M Costs:	Baseline	$1,928,660	$4,697,938
Capital Recovery Costs:	Baseline	$1,689,505	$4,907,611
Total Annual Costs:	Baseline	$3,618,166	$9,605,549
SO2 Reduction Cost Effectiveness to Baseline:	Baseline	$29,045	$56,698
ENERGY IMPACTS			
Power, MW:	Baseline	1.8	3.6
Efficiency Penalty:	Baseline	1.0%	1.0%
ENVIRONMENTAL IMPACTS			
Tons per Year SO2 Emissions:	174.4	49.8	5.0
Tons per Year SO2 Reduction:	Baseline	124.6	169.4

Hyperion Energy Center
Economic Impacts for BACT
Wastewater Treatment Plant

PARAMETER		API & DAF	API, DAF, Aeration
VOC IN	tpy	108.0	111.6
NG IN	MMBtu/yr	6,783	13,567
NG	$/HR	7.74	15.49
VOC OUT	tpy	2.16	2.23
VOC Delta	tpy	105.8	109.4
Capital COST	$	$ 700,000	$ 1,000,000
A Capital COST	$/Y	$ 76,856	$ 109,795
NG COST	$/Y	$ 67,834	$ 135,667
TOTAL A COST	$/Y	$ 144,690	$ 245,461
Total Cost Effectiveness	$/ton	$ 1,368	$ 2,244
Incremental Cost Effectiveness	$/ton	n/a	$ 27,893

Annual interest rate (fraction):	0.07
Control system life (years):	15
Catalyst life (years):	5
Capital recovery factor (system):	0.1098
Operating hours/yr:	8760

Hyperion Energy Center

Economic Impacts for BACT

Tank Farm Vapor Recovery System

PARAMETER			CASE 1		CASE 2
Flow Rate	MMSCF/day		10.8		2
VOC IN	tpy		143.5		75.9
REDUCTION	%		100.0		100.0
VOC OUT	tpy		0.0		0.0
VOC Delta	tpy		143.5		75.9
Capital COST	$		$ 75,000,000		$ 37,000,000
A Capital COST	$/Y		$ 7,079,469		$ 3,492,538
Cost Effectiveness	VOC		$ 49,345		$ 46,022

Annual interest rate (fraction):	0.07
Control system life (years):	20
Capital recovery factor (system):	0.0944
Operating hours/yr:	8760

Hyperion Energy Center

Economic Impacts for BACT

Tank Farm Thermal Oxidizer

PARAMETER			CASE 1		CASE 2
Flow Rate	ACFM		8600		2600
VOC IN	tpy		236.0		168.4
REDUCTION	%		98.0		98.0
NG IN	MMBtu/yr		11,102		3,356
VOC OUT	tpy		4.7		3.4
VOC Delta	tpy		231.3		165.0
Capital COST	$		$ 32,450,000		$ 17,200,000
A Capital COST	$/Y		$ 3,562,836		$ 1,888,468
NG COST	$/Y		$ 111,021		$ 33,565
TOTAL A COST	$/Y		$ 3,673,857		$ 1,922,032
NG	$/HR		12.67		3.83
TOTAL A COST	$/HR		419.39		219.41
Cost Effectiveness	VOC		$ 15,885		$ 11,645

Annual interest rate (fraction):	0.07
Control system life (years):	15
Capital recovery factor (system):	0.1098
Operating hours/yr:	8760

Appendix E

Air Dispersion Modeling and Class II Visibility Analysis Report

AIR DISPERSION MODELING AND CLASS II VISIBILITY ANALYSIS FOR THE PROPOSED HYPERION ENERGY CENTER IN UNION COUNTY, SOUTH DAKOTA

Prepared by:

RTP Environmental Associates
304A West Millbrook Rd.
Raleigh, NC 27609

October 2007

Table of Contents

1.0 Air Quality Modeling Summary 1
2.0 FACILITY LOCATION AND SITE DESCRIPTION 3
3.0 MODEL SELECTION 6
4.0 AERMOD APPLICATION 7
4.1 AERMAP 7
4.2 AERMET 9
4.3 AERMOD 10
5.0 SOURCE INPUT DATA, POLLUTANTS, GROUPINGS, AND PRELIMINARY ANALYSES 11
5.1 Source Parameters 11
5.2 Modeling Analysis Source Groupings 12
5.3 Good Engineering Practice (GEP) Stack Height Analysis 13
6.0 AERMOD RESULTS 14
6.1 Significant Impact Analysis Results 14
6.2 NAAQS and PSD Increment Analysis Results 14
6.3 One Microgram per Cubic Meter Footprints 17
6.4 Summary and Conclusions 17
7.0 CLASS II VISIBILITY ANALYSIS 21

Tables and Figures

Table 6-1. Significant Impact Analysis Results 15
Table 6-2. NAAQS and Increment Analysis Results 16
Table 7-1. Level-1 Class II Visibility Analysis Results 23
Table 7-2. PLUVUE II Class II Visibility Analysis Results 28

Figure 2-1. General Location of the Hyperion Energy Center 4
Figure 2-2. Specific Location of the Hyperion Energy Center 5
Figure 4-1. Hyperion Energy Center Receptor Grid 8
Figure 6-1. PM-10 Annual 1 $\mu g/m^3$ Footprint 18
Figure 6-2. SO_2 Annual 1 $\mu g/m^3$ Footprint 19
Figure 6-3. NO_X Annual 1 $\mu g/m^3$ Footprint 20
Figure 7-1. Wind Sector Analysis Results 26

1.0 Air Quality Modeling Summary

RTP conducted an air quality modeling analysis to assess the ambient impacts from the proposed Hyperion Energy Center (HEC) in Union County, South Dakota. The analysis results presented in this report, to be submitted as an appendix to the preconstruction PSD permit application for the HEC, satisfy the regulatory requirements for:

- Source Impact Analysis of 40 CFR § 52.21(k), and
- Air Quality Analysis of 40 CFR § 52.21(m).

The source impacts analysis requires a demonstration that the project will not cause or contribute to a violation of a National Ambient Air Quality Standard (NAAQS) or any applicable maximum allowable increase over the baseline concentration (increment). Air quality analysis requirements address the potential requirement for preconstruction ambient air quality monitoring. The air quality analysis quantifies only the impacts of the pollutants that are emitted in amounts in excess of PSD significant emission levels. For the proposed project, emissions of nitrogen oxides (NO_X), carbon monoxide (CO), sulfur dioxide (SO_2), particulate matter with an aerodynamic diameter of less than 10 µm (PM-10), particulate matter with an aerodynamic diameter of less than 2.5 µm (PM-2.5), and volatile organic compounds (VOC) will be emitted in significant quantities and were therefore evaluated in the modeling analysis.

Only the emissions from the proposed HEC were initially evaluated in the Source Impact Analysis of 40 CFR § 52.21(k) and Air Quality Analysis of 40 CFR § 52.21(m) for determining if the project would significantly impact local air quality. The resultant modeled concentrations were compared to the ambient significance levels for Class II areas. The results of this significant impacts analysis demonstrate that the proposed project will result in ambient impacts of SO_2, NO_X and PM-10 in excess of Class II significance levels. Therefore, a refined air quality analysis to calculate concentrations for comparison to the NAAQS and increments was required for these pollutants.[1]

[1] The South Dakota DENR also requested a NAAQS compliance evaluation for emissions of PM-2.5.

Furthermore, the preconstruction ambient monitoring exemption levels were determined to be exceeded due to emissions of SO_2 and PM-10. The results of the refined air quality analysis demonstrate that facility-wide, potential emissions from the proposed HEC upon completion of the proposed project will not cause or contribute to an exceedance of a NAAQS or increment.

The remainder of this document describes the modeling methodology and details the results of the analysis. The ambient impacts analysis was completed following the modeling protocol submitted in March 2007. In addition, the modeling conforms to the procedures specified in the Environmental Protection Agency's Guideline on Air Quality Models[2] and the New Source Review Workshop Manual (Draft)[3].

[2]. Guidelines on Air Quality Models, (Revised). EPA-450/2-78-027R, Appendix W of 40 CFR Part 51, U.S. Environmental Protection Agency, Office of Air Quality Planning and Standards, Research Triangle Park, North Carolina. August 1995.
[3]. New Source Review Workshop Manual (Draft), U.S. Environmental Protection Agency, Office of Air Quality Planning and Standards, Research Triangle Park, North Carolina, October 1990.

2.0 FACILITY LOCATION AND SITE DESCRIPTION

The HEC will be located approximately 40 kilometers north of Sioux City, IA and 10 kilometers north of Elk Point, South Dakota in Union County. The approximate Universal Transverse Mercator (UTM) coordinates of the facility are 684,395 meters east and 4,743,678 meters north (UTM Zone 14, NAD 27). Figure 2-1 shows the general location of the facility. Figure 2-2 shows the specific facility location on the Richland and Vermillion South East 7.5 minute USGS topographic maps. The terrain in the vicinity of the proposed HEC is generally flat. However, there is terrain to the north east with an elevation in excess of 430 meters (the base elevation of the facility is between 370 and 375 meters).

The proposed site is bordered by Interstate 29 south and west. The site encompasses approximately 2,000 acres of agricultural land. Union County is classified as attainment or unclassifiable for all regulated NSR pollutants.

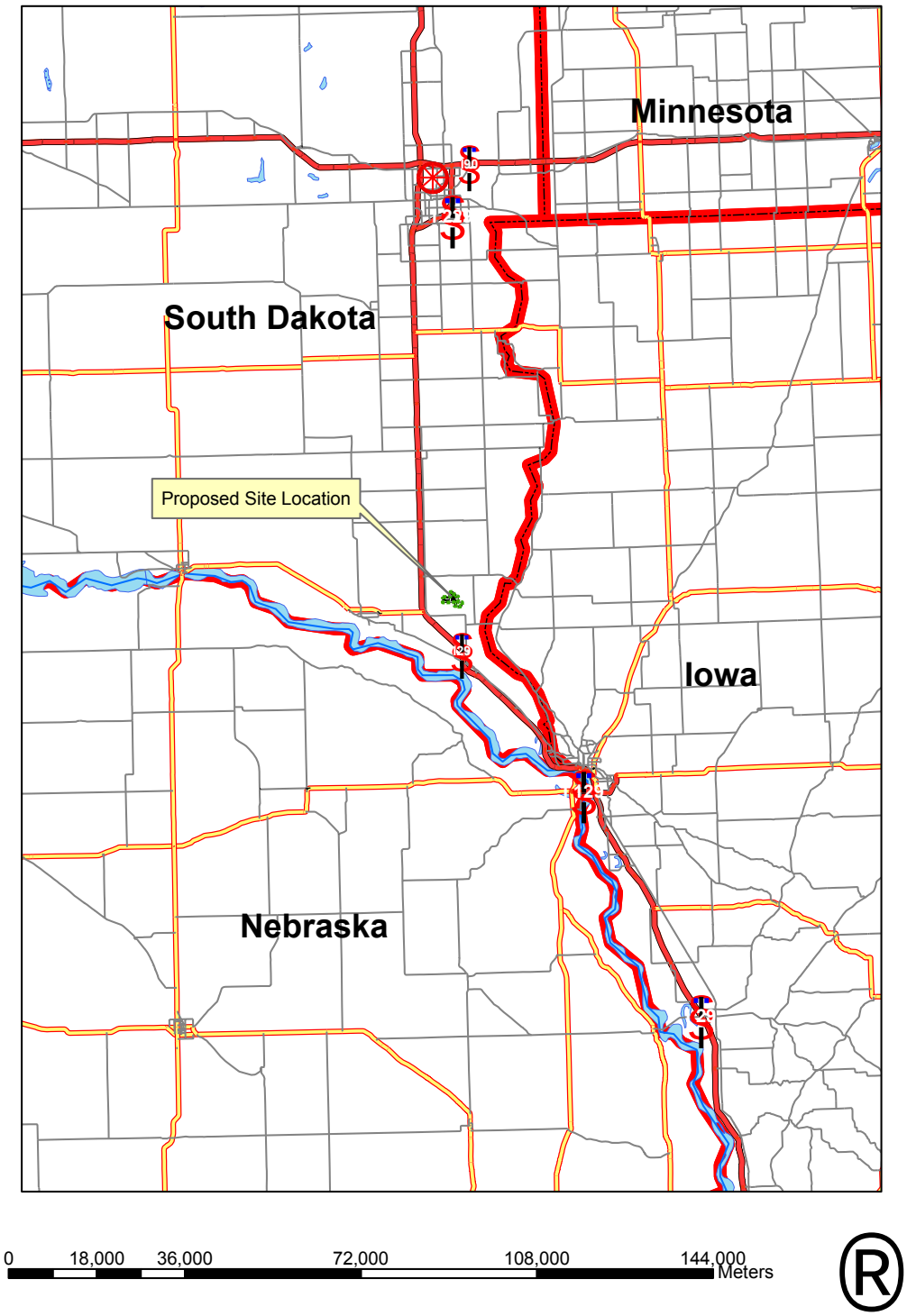

Figure 2-1. General Location of the Hyperion Energy Center

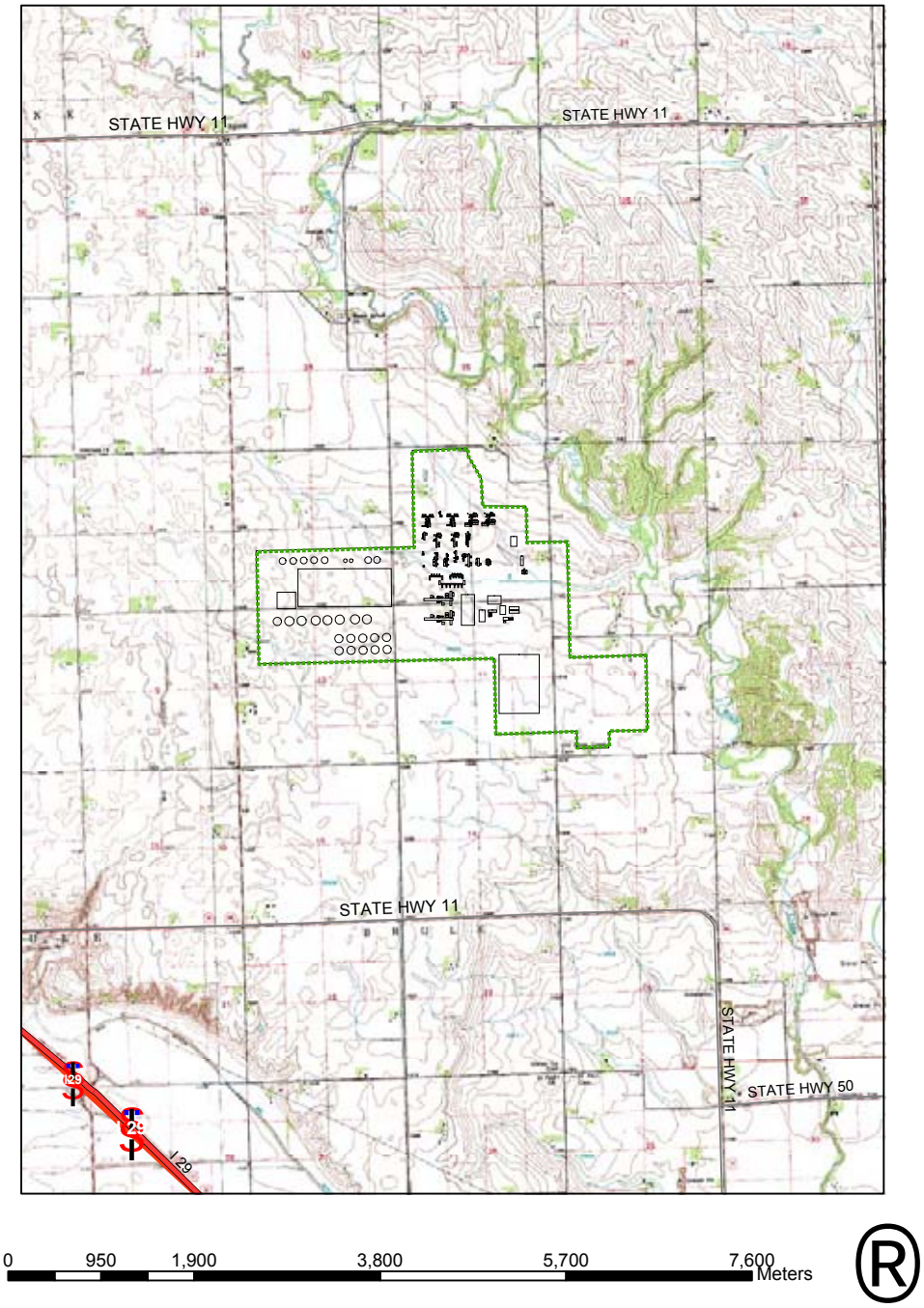

Figure 2-2. Specific Location of the Hyperion Energy Center

3.0 MODEL SELECTION

RTP used the latest version of the AMS/EPA Regulatory Model (AERMOD, Version 07026) to conduct the dispersion modeling analysis. AERMOD is the most appropriate model for calculating ambient concentrations near the HEC based on the model's ability to incorporate multiple sources and source types, the model's ability to incorporate building wake effects, and the model's ability to calculate concentrations within the cavity recirculation zone. It is also the model recommended for such studies by the South Dakota DENR. All model options were selected as recommended in the EPA Guidelines on Air Quality Models[4].

AERMOD is a Gaussian plume dispersion model that is based on planetary boundary layer principles for characterizing atmospheric stability. The model evaluates the non-Gaussian vertical behavior of plumes during convective conditions with the probability density function and the superposition of several Gaussian plumes.

[4] Guidelines on Air Quality Models, (Revised). EPA-450/2-78-027R, Appendix W of 40 CFR Part 51, U.S. Environmental Protection Agency, Office of Air Quality Planning and Standards, Research Triangle Park, North Carolina. August 1995.

4.0 AERMOD APPLICATION

AERMOD is a modeling system with three components: AERMAP is the terrain preprocessor program, AERMET is the meteorological data preprocessor, and AERMOD includes the dispersion modeling algorithms. AERMOD was developed to calculate concentrations in both simple and complex terrain. As with CTDMPLUS, AERMOD uses the dividing streamline concept to address plume interactions with elevated terrain.

4.1 AERMAP

RTP used the terrain pre-processor AERMAP to extract receptor elevations from USGS Digital Elevation Model (DEM) files for use as input to AERMOD. RTP obtained 7.5 minute-resolution DEM data files. Receptor locations were based on North American Datum of 1927 (NAD 27). AERMAP was used to generate the elevation and height scale for each receptor. The height scale is a measure of the height and distance of the local terrain feature that has the greatest influence on dispersion for that receptor.

The receptor grid consisted of three cartesian grids. The first cartesian grid extended to approximately 2500m from the fence in all directions. Receptors in this region were spaced at 100m intervals. The second grid extended from 2,500m to 5,000m. Receptor spacing in this region was 250m. The third Cartesian grid extended from 5,000m to 10,000m, with a receptor spacing of 1,000m. The grid was designed such that it extended beyond the maximum distance to a significant impact and such that maximum facility impacts fell within the 100m spacing of receptors.

Terrain within 5 km of the site is generally flat; however, as stated above, there are locations with terrain in excess of stack top elevation. Therefore, receptor elevations were input to the model for each receptor location. The receptor elevations were obtained from the 30-meter, USGS 7.5-minute DEM data files and were processed for input to the models using the Bowman BEEST program. The receptor grid used in the analysis is shown in Figure 4-1.

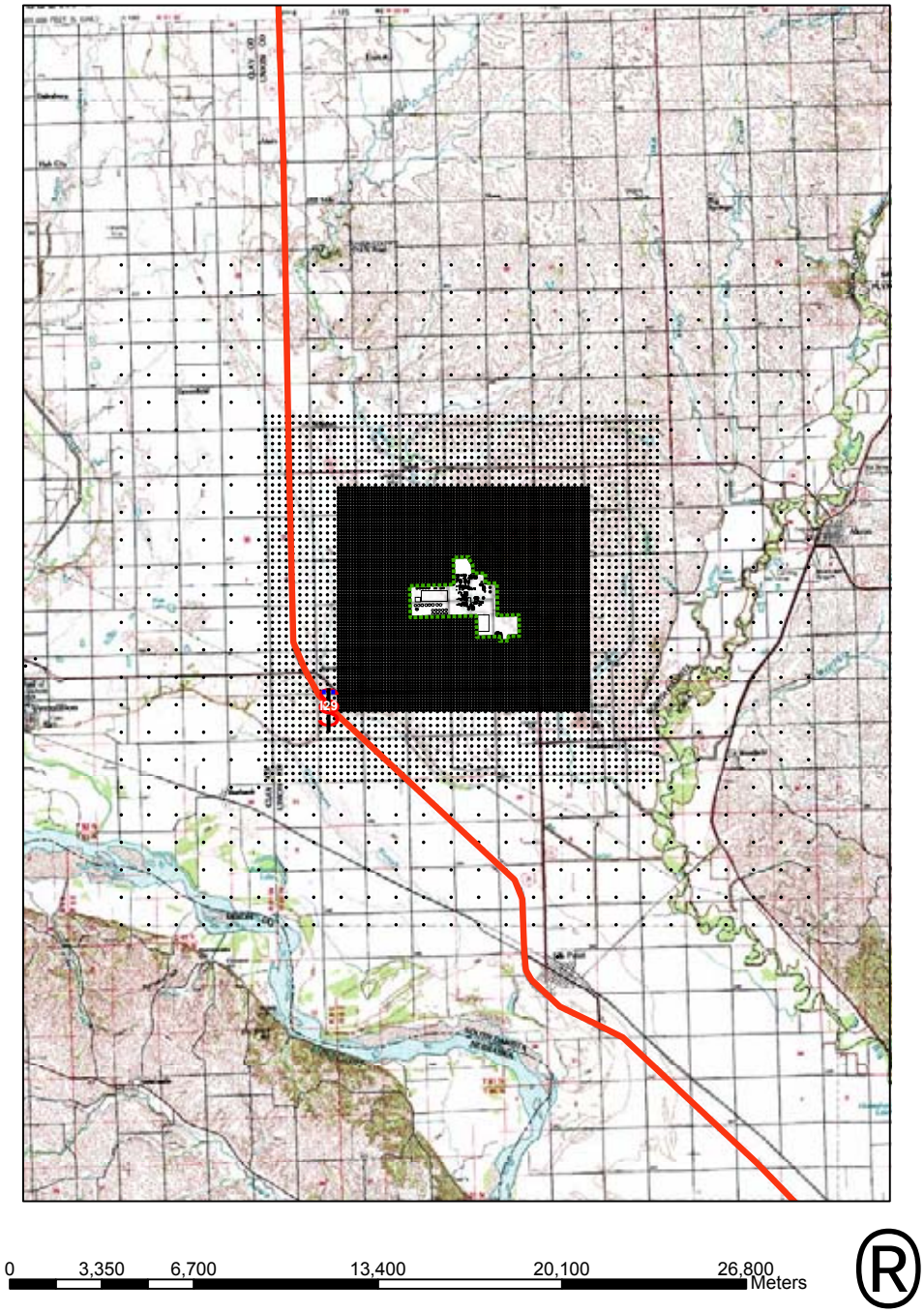

Figure 4-1. Hyperion Energy Center Receptor Grid

Generally, a fine-mesh receptor grid is placed around the location of maximum concentrations to pinpoint the absolute maximum concentrations calculated from a facility. Additional modeling using a fine-mesh receptor grid was not necessary however, because the maximum pollutant concentrations from the proposed facility occurred within areas of the receptor grids where spacing is 100m. Therefore, no fine mesh receptor grids were required.

4.2 AERMET

The meteorological data pre-processor AERMET was used to develop meteorological data for the AERMOD modeling system. The AERMET software processes surface meteorological data and twice-daily upper air sounding data into the proper format using a three-stage process. The first stage extracts the data and administers several data quality checks. The second stage merges the data, and the third stage estimates the required boundary layer parameters and writes the data in a format readable by AERMOD.

Five years (2000-2004) of meteorological data were processed for use in the analysis. Sequential hourly surface data from the National Weather Service (NWS) station in Sioux Falls, SD (WBAN No. 14944) and upper air data from the NWS station in Omaha, NE (WBAN No. 94980) were used. The profile base elevation was set equal to the Sioux Falls station elevation of 433m.

According to the EPA's AERMOD Implementation Guide[5], the surface characteristics should be similar for the NWS meteorological station and the study site. Based upon visual observation of aerial photographs of both the Sioux Falls, SD NWS and the proposed HEC site, RTP determined that the sites possess similar surface characteristics and that the Sioux Falls data are representative of the HEC site.

In defining the sectors for the surface characteristics, 45 degree sectors were specified with a seasonal frequency. A weighted average of surface characteristics by surface

[5] AERMOD Implementation Guide, EPA, September 27, 2005.

area was applied within each sector for 3 km upwind of the Sioux Falls NWS. The default AERMET Table 4-1 albedo values, Table 4-2b Bowen ratio values, and Table 4-3 surface roughness lengths were used in developing the seasonal weighted averages. The values employed can be found in Appendix A to this report.

4.3 AERMOD

AERMOD was run in the regulatory default mode using the rural land use dispersion option. The land use typing scheme of Auer was used to determine the proper land use classification of the Union County site.[6] Specifically, the USGS land use coverages were obtained for the area. The land use classification codes were then categorized as either urban or rural, based on the USGS land use classification codes. RTP determined that majority of the land use within the 3km radius of the area is rural. Therefore, AERMOD was not run using the urban dispersion option.

[6] Auer, Jr., A.H. "Correlation of Land Use and Cover with Meteorological Anomalies." Journal of Applied Meteorology, 17:636-643, 1978.

5.0 SOURCE INPUT DATA, POLLUTANTS, GROUPINGS, AND PRELIMINARY ANALYSES

5.1 Source Parameters

A total of 84 new point sources will be constructed as part of the proposed project. The point sources consist of process heaters, combustion turbines, process vents, fabric filter baghouse vents, cooling towers, flares, and internal combustion engines. There will also be coal and coke handling operations and emissions from the road dust created by truck traffic. RTP modeled these sources as fugitive volume sources.

RTP followed the procedures outlined in the Texas New Source Review Permits Division's Air Quality Modeling Guidelines[7] in defining the parameters for the roadway volume sources. These procedures are described below.

- Volume source input data for the roads were calculated based upon the following eight steps:
  1. We determined the adjusted width of the road. The adjusted width was defined as the actual width of the road plus 6 m. The additional width represents turbulence caused by the vehicle as it moves along the road. This width represents a side of the base of the volume.
  2. We then determined the number of volume sources by dividing the length of the road by the adjusted width. The result was the maximum number of volume sources that were used to represent the road.
  3. The height of the volume source was set equal to twice the height of the vehicle generating the emissions.
  4. The initial horizontal dispersion coefficient (sigma y) was calculated by dividing the adjusted width by 2.15.
  5. The initial vertical dispersion coefficient (sigma z) was calculated by dividing the height of the volume (as determined in step 3) by 2.15.
  6. The height of the release point was calculated by dividing the height of the volume (as determined in step 3) by 2. This is the center of the volume.

[7]. Air Quality Modeling Guidelines (RG-25, Revised), Texas New Source Review Permits Division, February 1999.

7. The total road emission rate was divided equally into the number of volume sources (as determined in step 2).
8. The UTM coordinates of each volume source was set to the location of the center of the base of the volume. This location must was at least 1 m from the nearest receptor.

Volume source parameters for the coal and coke handling operations were calculated based upon the suggested procedures of Table 3-1 of the AERMOD User's Guide.

The volume source parameter calculations for the roads and the coal/coke handling sources can be found in Appendix A to this report.

Emissions from the cooling towers were modeled as a series of point sources, one for each cooling cell. The stack diameter was calculated based on the area cross-section for the cooling tower exhaust fan. The stack height was set equal to the actual height of the cooling tower. A temperature of zero Kelvin was used, so that the gas exit temperature varied with ambient temperature.

RTP also included a number of off-site (i.e., non-Hyperion) sources in its evaluation of NAAQS and increment compliance. Emission rates and stack parameters for all of these off-site, or "nearby," sources were obtained from the South Dakota DENR, the Nebraska Department of Environmental Quality, and the Iowa Department of Natural Resources. A distance of 50km was added to the maximum distance to a significant impact from the proposed HEC (determined to be 6.0km) and used as the radius to define the screening area for identifying the off-site sources. Therefore a screening area radius of 56km was used.

All modeled source input data, including emission rates, can be found in Appendix A to this report.

5.2 Modeling Analysis Source Groupings

RTP modeled three source groups to assess compliance: 1) "SIA," 2) "NAAQS," and 3) "INCRMT." The "SIA" source group was used to asses the pollutants with a significant

impact. This source group consisted of all of the proposed new Hyperion sources. The "NAAQS" source group represents the sources that were modeled in assessing compliance with the NAAQS, including all of the HEC sources and all of the off-site sources. The "INCRMT" source group represents the sources that consume PSD increment and were therefore evaluated in the increment analyses. All of the proposed HEC sources consume increment and were therefore included in this source group. There were only three off-site sources that were not included as they were constructed before the appropriate PSD baseline date. Theses three sources (Basin Electric Power, Southeast Farmers Elevator Coop, and Standard Redimix) were therefore not included in the "INCRMT" source group.

5.3 Good Engineering Practice (GEP) Stack Height Analysis

A good engineering practice (GEP) stack height evaluation was conducted to determine if inclusion of building wake effects would be required in the modeling analysis. Procedures used in this analysis were in accordance with those described in the EPA Guideline for Determination of Good Engineering Practice Stack Height (Technical Support Document for the Stack Height Regulations - Revised).[8]

GEP formula stack height, as defined in 40 CFR part 51, is expressed as GEP = Hb + 1.5L, where Hb is the building height and L is the lesser of the building height or maximum projected width. Nearby is defined as the distance up to five times the lesser of the height or width of a structure, but not greater than one-half mile. Both the height and width of the structure are determined from the frontal area of the structure projected onto a plane perpendicular to the wind.

The proposed HEC is a complex facility from an atmospheric dispersion perspective. Since the stack heights at the HEC were determined to be affected by building downwash, AERMOD was run considering building wake effects.

[8] Guideline for Determination of Good Engineering Practice Stack Height (Technical Support Document for Stack Height Regulations (Revised). EPA-450/4-80-023R, U.S. Environmental Protection Agency. June 1985.

As recommended in the GEP Technical Support document, structures located less than 1L apart in the cross-wind direction are treated as one structure in the analysis. Structures were combined and direction-specific building dimensions were calculated using the EPA's BPIP-PRIME computer program (Version 04274). The base elevation for each building was calculated from the USGS DEM receptor elevations by the Bowman BEEST program.

6.0 AERMOD RESULTS

Appendix B to this report provides the model summary output. AERMOD input and output files, including the BPIP-PRIME files, are included on the enclosed CD.

6.1 Significant Impact Analysis Results

The significant impact analysis results are presented in Table 6-1. As shown, the project is expected to result in significant impacts for PM-10, SO_2, and NO_X. A more refined NAAQS and increment analysis was therefore conducted for each of these pollutants. Please also note that the significant monitoring concentration levels were also predicted to be exceeded due to emissions of SO_2 and PM-10. Existing ambient background pollutant data were used in lieu of site-specific preconstruction monitoring data in this modeling evaluation.

6.2 NAAQS and PSD Increment Analysis Results

The results of the NAAQS and increment analysis are presented in Table 6-2. The maximum combined impacts from all sources are presented. A background concentration was added to the modeled impacts in assessing compliance with the NAAQS. The background values were recommended by the South Dakota DENR. As shown, the model demonstrates compliance with the NAAQS and PSD increments for all pollutants.

Table 6-1. Significant Impact Analysis Results

Pollutant	Averaging Period	Maximum Modeled Impact ($\mu g/m^3$)	PSD Significant Class II Impact Level ($\mu g/m^3$)	Significant Monitoring Concentration ($\mu g/m^3$)	Maximum Distance to a Significant Impact (km)
PM-10	24-hour	14.8	5	10	4.3
	Annual	2.46	1	N/A	2.9
SO_2	3-hour	129	25	N/A	5.4
	24-hour	51.4	5	13	6.0
	Annual	4.88	1	N/A	3.2
NO_X	Annual	2.94	1	14	2.8
CO	1-hour	860	2,000	N/A	NA
	8-hour	459	500	575	NA

N/A – not applicable

Table 6-2. NAAQS and Increment Analysis Results

Pollutant	Averaging Period	Concentration ($\mu g/m^3$)[a]	Background Concentration ($\mu g/m^3$)	Total Concentration ($\mu g/m^3$)	Standard	%Standard	Analysis
PM-10	24-hr	23.27	49	72	150	48%	NAAQS
	ANNUAL	2.62	19	22	50	43%	NAAQS
	24-hr	14.38	NA	14	30	48%	Increment
	ANNUAL	2.59	NA	2.59	17	15%	Increment
PM-2.5	24-hr	9.49	23	32.49	35	93%	NAAQS
	ANNUAL	2.38	9	11.38	15	76%	NAAQS
SO_2	3-hr	107.44	21	128.4	1300	10%	NAAQS
	24-hr	40.45	5	45.4	365	12%	NAAQS
	ANNUAL	5.36	3	8.4	80	10%	NAAQS
	3-hr	107.44	NA	107.4	512	21%	Increment
	24-hr	40.45	NA	40.4	91	44%	Increment
	ANNUAL	5.31	NA	5.3	20	27%	Increment
NO_X	ANNUAL	3.43	10	13.4	100	13%	NAAQS
	ANNUAL	3.24	NA	3.2	25	13%	Increment

[a]Maximum impacts are presented for the annual averaging period. Highest second high values are presented for the short-term averaging periods, including PM-10. Highest 8th high value is presented for the 24-hour average PM-2.5 concentration.

6.3 One Microgram per Cubic Meter Footprints

The South Dakota DENR requested that Hyperion provide annual 1 $\mu g/m^3$ impact footprints for each of the pollutants with PSD increments. These footprints are provided in Figures 6-1 through 6-3.

6.4 Summary and Conclusions

Emissions of regulated pollutants were evaluated in a dispersion modeling analysis. The modeling demonstrates that the ground level concentrations of each pollutant are below the levels designed to protect human health and welfare. The modeling input and output files are provided on the attached CD. Model summary results are presented in Appendix B to this report. The summary results list the model file names associated with each phase of the analysis.[9]

[9] As a general rule, the AERMOD input files have a "dta" extension. The AERMOD output files have a "lst" extension.

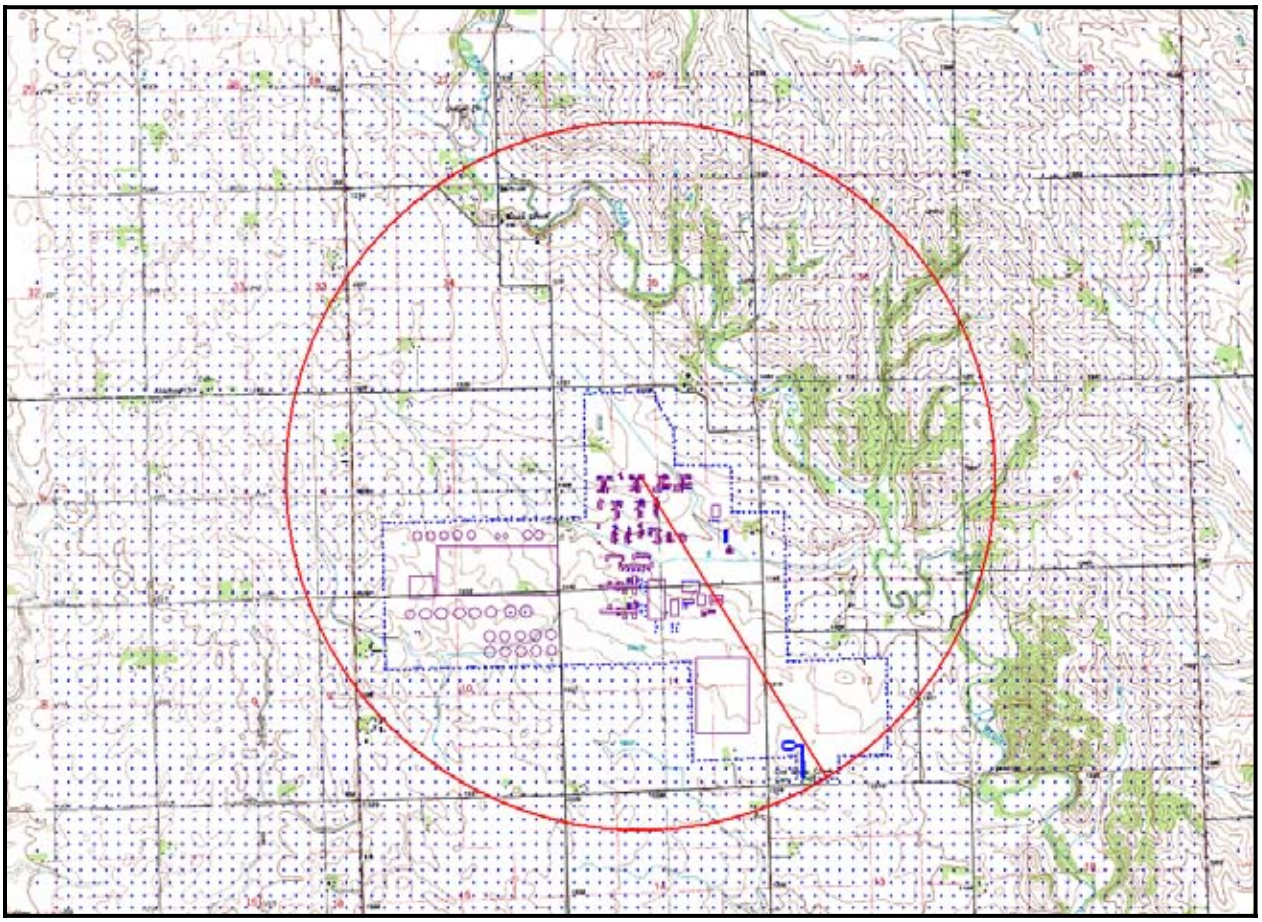

Figure 6-1. PM-10 Annual 1 µg/m^3 Footprint

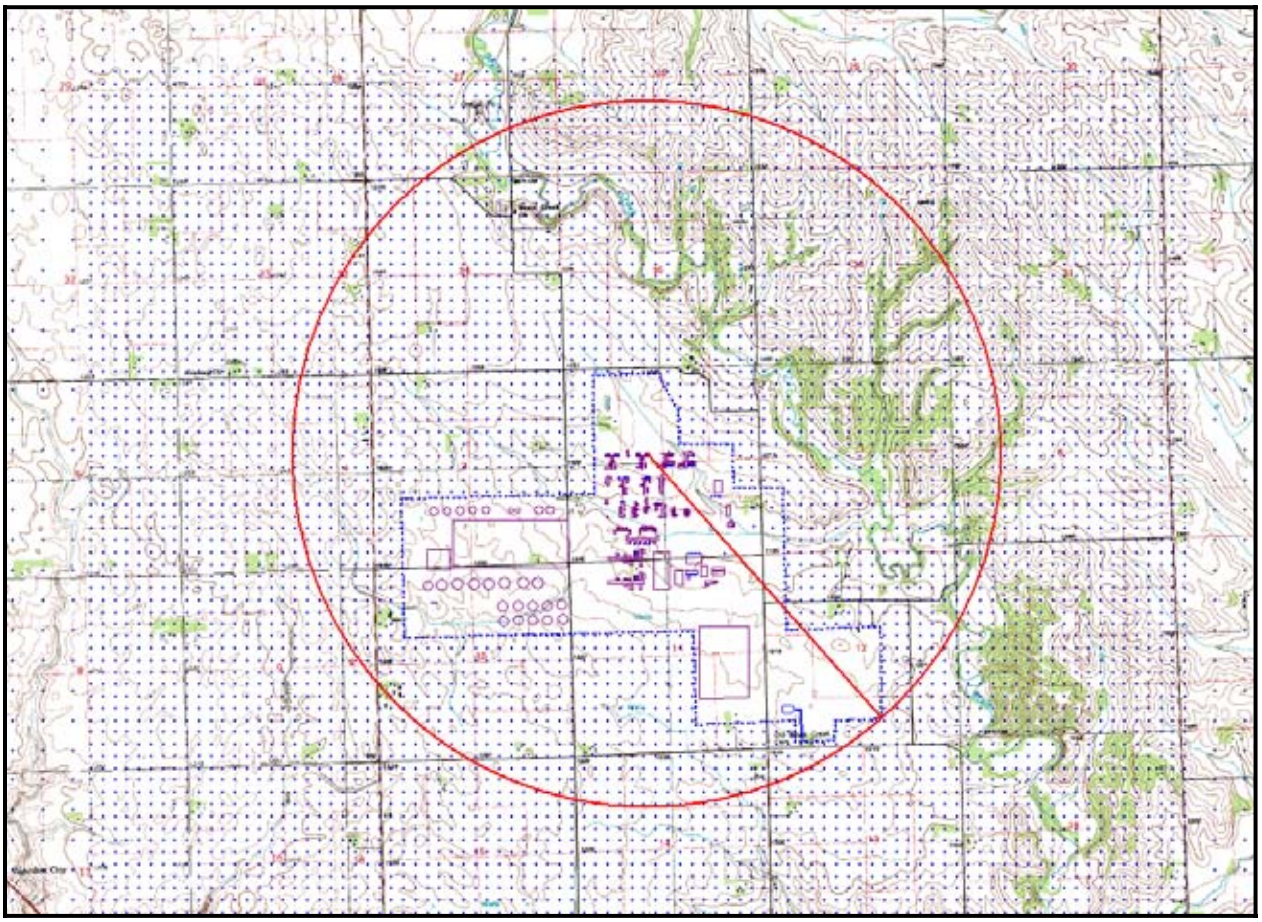

Figure 6-2. SO_2 Annual 1 µg/m^3 Footprint

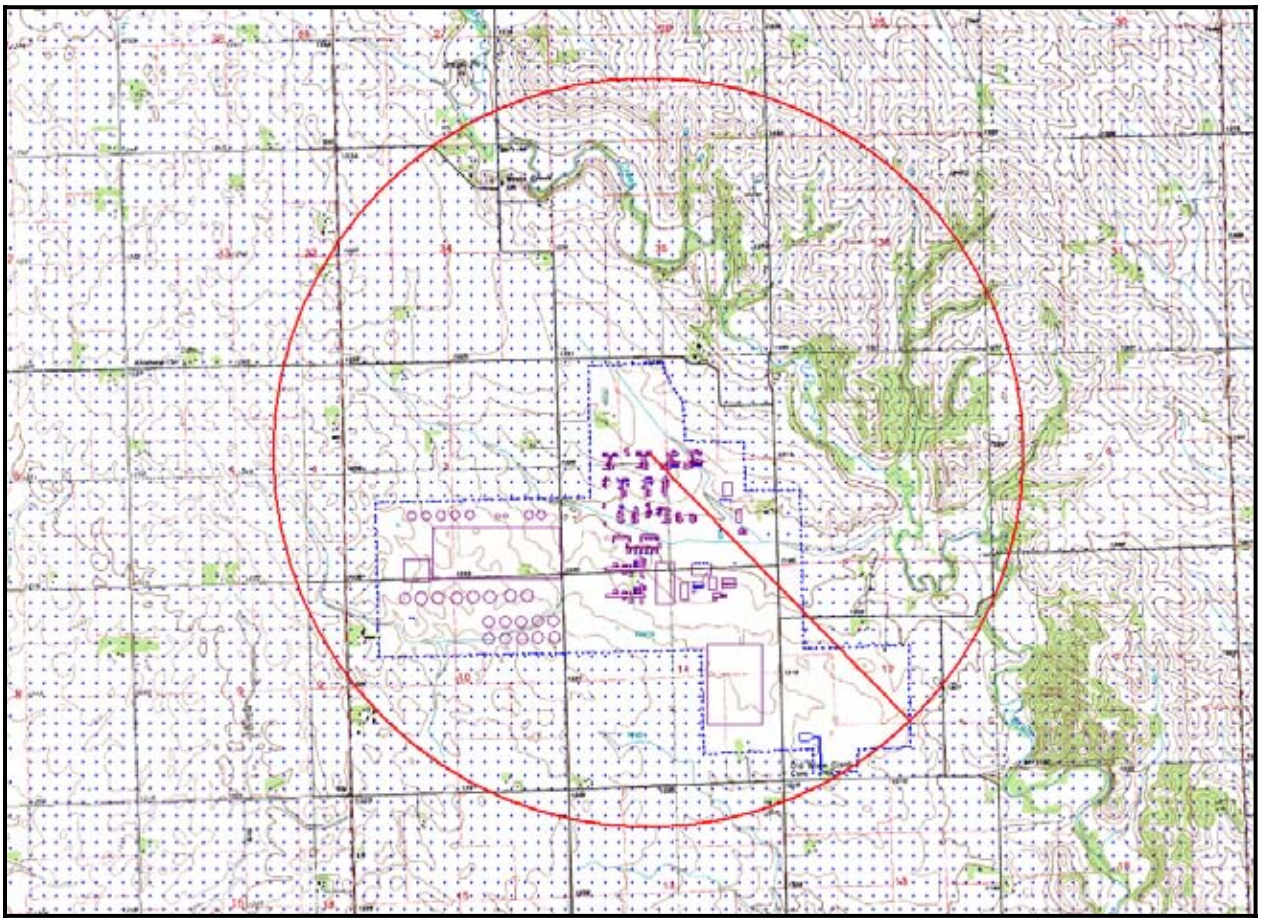

Figure 6-3. NO_X Annual 1 µg/m^3 Footprint

7.0 CLASS II VISIBILITY ANALYSIS

The CAA Amendments of 1977 require evaluation of new and modified emission sources to determine potential impacts on visibility. The maximum increase in hourly particulate matter and NO_X emissions from the proposed HEC were used as input parameters in the visibility analysis. Emissions were evaluated as described in the EPA Workbook for Plume Visual Impact Screening and Analysis[10] to determine potential contribution to atmospheric discoloration and visual range reduction.

Generally, atmospheric discoloration occurs when NO emissions from combustion sources react in the presence of atmospheric oxygen to form NO_2, a reddish-brown gas. Another form of atmospheric discoloration may be caused by particulate emissions and secondary aerosols formed by gaseous precursor emissions. The visual range reduction (increased haze) is caused primarily by particulate emissions and secondary aerosols such as sulfates and nitrates[11]. Both secondary sulfate and primary particulate emissions are accounted for in the analysis. Emission of other pollutants do not materially affect visibility.

EPA visibility impairment analysis guidelines were followed in conducting the analysis. A Level-1 analysis was performed using EPA's VISCREEN model for all National Park Service facilities located within 300km of the proposed HEC project site. The facilities evaluated included:

- Homestead National Monument (located at a distance of 167km from HEC);
- The Lewis & Clark National Historic Trail (at 106km);
- The Niobrara National Scenic River (at 101km);
- The Pipestone National Monument (at 92km); and,
- The Missouri National Recreational River (at 13km).

---

[10] U.S. EPA., Workbook for Plume Visual Impact Screening and Analysis. EPA Pub. No. 450/4-88-015. RTP, NC. September 1988.
[11] U.S. EPA., Workbook for Estimating Visibility Impairment.. EPA Pub. No. 450/4-80-031. RTP, NC. November 1980.

This analysis requires inputs of emission rates (PM and NO_X), regional visual range, distance between the source and the object of study, and worst-case dispersion parameters (i.e., wind speed and stability). Outputs from the model include:

- Plume contrast against the sky and terrain; and,
- Perceptibility of the plume (Delta E criteria).

Emission rates for PM and NO_X for the Level-1 analysis were set to 237 lb/hr and 278 lb/hr, respectively. These emissions represent the total facility emission proposed as part of the modification. The background visual range was set to 59.8km, which was calculated by the PLUVUE II model given background sulfate and nitrate concentrations. The VISCREEN default screening values for Delta E (2.0) and contrast (0.05) were assumed.

The results of the Level-1 screening analysis are presented in Table 7-1. As shown, visibility is not anticipated to be affected using the conservative assumptions associated with the VISCREEN Level-1 analysis, except at the Missouri National Recreational River. Exceedances of the default delta E and green contrast parameters were calculated at this park. Values in excess of the applicable screening level values are presented in Table 7-1 in bold italics. Therefore a more refined Level-3 PLUVUE II analysis was performed. For the more refined analysis, screening values for Delta E (1.0) and contrast (0.02) were assumed.

The primary step in the PLUVUE analysis was to identify the frequency of occurrence of the dispersion conditions associated with the wind directions that could transport the emissions towards the Missouri National Recreational River. The section of the Missouri River Park closest to the proposed Hyperion facility is located in a 200-240 degree wind sector (wind blowing towards the park) relative to the Hyperion facility. The closest portion of the park is located on a 220 degree wind vector at 13km. The frequency of occurrence of all meteorological conditions in the 200-240 degree wind sector were evaluated using the Iowa Department of Natural Resources Visibility

Table 7-1. Level-1 Class II Visibility Analysis Results

Viewing Background	Theta (degrees)	Azimuth (degrees)	Distance (km)	Alpha (degrees)	Delta E		Green Contrast	
					Criterion	Plume	Criterion	Plume
Homestead National Monument								
SKY	10	84	167	84	2	0.317	0.05	0.003
SKY	140	84	167	84	2	0.056	0.05	-0.003
TERRAIN	10	84	167	84	2	0.056	0.05	0.001
TERRAIN	140	84	167	84	2	0.015	0.05	0.000
Lewis & Clark National Historic Trail								
SKY	10	84	106	84	2	1.067	0.05	0.012
SKY	140	84	106	84	2	0.220	0.05	-0.010
TERRAIN	10	84	106	84	2	0.422	0.05	0.005
TERRAIN	140	84	106	84	2	0.092	0.05	0.003
Niobrara National Scenic River								
SKY	10	84	101	84	2	1.193	0.05	0.013
SKY	140	84	101	84	2	0.252	0.05	-0.011
TERRAIN	10	84	101	84	2	0.507	0.05	0.005
TERRAIN	140	84	101	84	2	0.108	0.05	0.004
Pipestone National Monument								
SKY	10	84	92	84	2	1.469	0.05	0.017
SKY	140	84	92	84	2	0.328	0.05	-0.013
TERRAIN	10	84	92	84	2	0.711	0.05	0.008
TERRAIN	140	84	92	84	2	0.145	0.05	0.005

Viewing Background	Theta (degrees)	Azimuth (degrees)	Distance (km)	Alpha (degrees)	Delta E		Green Contrast	
					Criterion	Plume	Criterion	Plume
Missouri National Recreational River								
SKY	10	120	15	48	2	***13.301****	0.05	***.178****
SKY	140	120	15	48	2	***5.898****	0.05	***-.144****
TERRAIN	10	84	13	84	2	***28.431****	0.05	***.245****
TERRAIN	140	84	13	84	2	***4.316****	0.05	***.096****

Screening Tool for the 2004 Sioux Falls meteorological dataset. This screening tool follows the procedures outlined in the visibility Workbook. Dispersion conditions for this wind sector were then ranked in order of decreasing severity. To obtain the worst-case dispersion conditions for input to the PLUVUE model, only those conditions with a cumulative probability of occurrence exceeding 1% were considered. Dispersion conditions which occur for less than 1% of the time (or for less than 12 hours) were not considered because it is unlikely that such conditions will allow for plume transport to the area of interest.

The results of this wind sector analysis are shown in Figure 7-1. It was determined that the morning hours (hours 1-6) with F stability and 1 m/sec wind speed are the worst-case conditions that have the potential to transport a plume to the Missouri National Recreational River. PLUVUE II was then executed with these dispersion conditions as input.

Currently, there is no recommended procedure for conducting an analysis of multiple sources. Therefore, total facility emissions were conservatively assumed to be emitted from a single stack with stack characteristics equal to one of the heaters at the proposed facility. The plume/observer geometries evaluated were consistent with available guidance. The greatest potential for visibility impacts will occur for wind directions that will carry the plume closest to the observer. Therefore, multiple downwind distances were modeled. Since it is important for accurate calculation of the oxidation of NOx to NO_2, the first four downwind locations were close together as recommend in the PLUVUE manual. The fourth distance was set equal to shortest distance between the boundary of the park and the proposed HEC facility. Distances of 1.0, 2.5, 5.0, 10, and 13 km were therefore modeled. A plume/observer off-set angle of 11.25 degrees and a 40 degree wind vector (wind blowing from) were used to determine the location of the observer relative to the plume. The 40 degree vector equates to the 220 degree (wind blowing towards) vector that the park is located on relative to the HEC facility. Since no terrain features or integral vistas are present at the park, only horizontal views with a clear sky as background were evaluated. Multiple sun angles

Figure 7-1. Wind Sector Analysis Results

Iowa DNR Level-2 Visibility Screening Tool

Facility:	Hyperion
Sensitive Area Being Evaluated:	Missouri National Recreation River
Project Number:	
Minimum Source-Site Angle:	200
Maximum Source-Site Angle:	240
Source-Observer Distance (km):	13
Meteorological Data Set:	Sioux Falls
Time Period Being Evaluated:	1/1/4 - 12/31/4

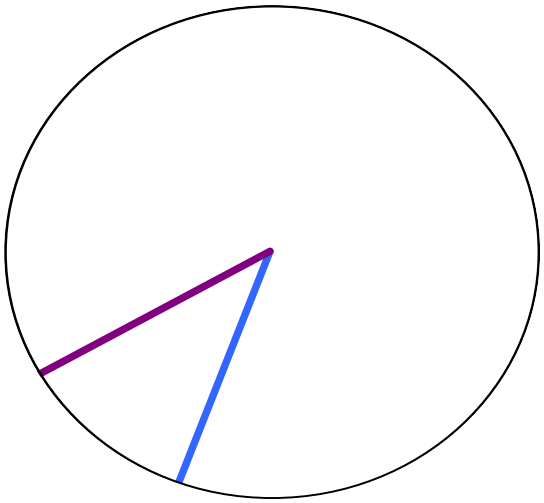

Worst-Case Meteorological Conditions Summary

Dispersion Condition (stability, wind speed)	σyσzu (m^3/s)	Transport Time (hours)	Frequency (f) and Cumulative Frequency (cf) of occurrence of given dispersion condition associated with source-site wind directions for given time of day (%)							
			1 - 6		7 - 12		13 - 18		19 - 24	
			f	cf	f	cf	f	cf	f	cf
F,1	1.77E+04	7.2	1.64	**1.64**	0.18	0.18	0.00	0.00	0.68	0.68
F,2	3.54E+04	2.4	0.73	2.37	0.14	0.32	0.05	0.05	0.36	**1.04**
E,1	4.59E+04	7.2	0.09	2.46	0.05	0.37	0.00	0.05	0.00	1.04
F,3	5.31E+04	1.4	1.64	4.10	0.09	0.46	0.00	0.05	1.05	2.09
E,2	9.19E+04	2.4	0.23	4.33	0.14	0.60	0.00	0.05	0.14	2.23
D,1	1.07E+05	7.2	0.18	4.51	0.00	0.60	0.00	0.05	0.00	2.23
E,3	1.38E+05	1.4	0.41	4.92	0.23	0.83	0.00	0.05	0.32	2.55
E,4	1.84E+05	1.0	0.46	5.38	0.09	0.92	0.09	0.14	0.87	3.42
D,2	2.15E+05	2.4	0.09	5.47	0.23	**1.15**	0.05	0.19	0.05	3.47
E,5	2.30E+05	0.8	0.55	6.02	0.05	1.20	0.14	0.33	1.18	4.65
D,3	3.22E+05	1.4	0.36	6.38	0.77	1.97	0.36	0.69	0.32	4.97
D,4	4.30E+05	1.0	0.68	7.06	0.64	2.61	0.77	**1.46**	0.59	5.56
D,5	5.37E+05	0.8	0.73	7.79	0.68	3.29	0.73	2.19	1.14	6.70
D,6	6.44E+05	0.7	0.96	8.75	1.14	4.43	1.28	3.47	1.18	7.88
D,7	7.52E+05	0.6	0.46	9.21	0.91	5.34	0.91	4.38	0.46	8.34
D,8	8.59E+05	0.5	0.32	9.53	0.36	5.70	0.46	4.84	0.18	8.52

were considered by modeling four different seasons (March 21, June 21, September 21, and December 21). Since the worst-case dispersion conditions were determined to occur in the morning, simulation times were selected as close after sunrise as allowed by the model. The simulations spanned a 2-hour period at half hour increments. Background pollutant concentration data for input to the model were obtained from the 2005 South Dakota monitoring report. A relative humidity values and ambient temperatures for each month were obtained from climatic data summaries from Sioux Falls, SD. Default values recommended in the PLUVUE manual were used for all other input values.

The results of the PLUVUE analysis are shown in Table 7-2. As shown, the maximum calculated plume contrast and delta e values are below the threshold values, demonstrating that the facility should not impact visibility at the park. The VISCREEN and PLUVUE II model files can be found on the attached disk.

Table 7-2. PLUVUE II Class II Visibility Analysis Results

Day	Delta E		Green Contrast	
	Criterion	Plume	Criterion	Plume
March 21	1.0	0.187	0.02	0.001
June 21	1.0	0.085	0.02	-0.001
September 21	1.0	0.187	0.02	0.001
December 21	1.0	0.179	0.02	0.000

APPENDIX A
MODEL INPUT DATA

Hyperion Union County SD AERMET Surface Characteristics

							Albedo Value (Table 4-1 AERMET)				Bowen Ratio Value (Table 4-2b AERMET)				Surface Roughness Length (m) (Table 4-3)			
Sector No.	Sector Beginning Direction (Degrees)	Sector Ending Direction (Degrees)	Land-Use Type	Land-Use Description	Land-Use Area (km^2)	Fraction Total	Spring	Summer	Autumn	Winter	Spring	Summer	Autumn	Winter	Spring	Summer	Autumn	Winter
1	0	45	21	Cultivated Land	1.80	0.51	0.14	0.20	0.18	0.60	0.30	0.50	0.70	1.50	0.03	0.20	0.05	0.01
			41, 61	Deciduous Forest	1.00	0.29	0.12	0.12	0.12	0.50	0.70	0.30	1.00	1.50	1.00	1.30	0.80	0.50
			11-17	Urban	0.70	0.20	0.14	0.16	0.18	0.35	1.00	2.00	2.00	1.50	1.00	1.00	1.00	1.00
				Total/*Weighted Avg.*	**3.50**	**1.00**	***0.13***	***0.17***	***0.16***	***0.52***	***0.55***	***0.74***	***1.05***	***1.50***	***0.50***	***0.67***	***0.45***	***0.35***
2	45	90	21	Cultivated Land	0.25	0.07	0.14	0.20	0.18	0.60	0.30	0.50	0.70	1.50	0.03	0.20	0.05	0.01
			41, 61	Deciduous Forest	0.50	0.14	0.12	0.12	0.12	0.50	0.70	0.30	1.00	1.50	1.00	1.30	0.80	0.50
			11-17	Urban	2.75	0.79	0.14	0.16	0.18	0.35	1.00	2.00	2.00	1.50	1.00	1.00	1.00	1.00
				Total/*Weighted Avg.*	**3.50**	**1.00**	***0.14***	***0.16***	***0.17***	***0.39***	***0.91***	***1.65***	***1.76***	***1.50***	***0.93***	***0.99***	***0.90***	***0.86***
3	90	135	21	Cultivated Land	1.00	0.29	0.14	0.20	0.18	0.60	0.30	0.50	0.70	1.50	0.03	0.20	0.05	0.01
			41, 61	Deciduous Forest	0.50	0.14	0.12	0.12	0.12	0.50	0.70	0.30	1.00	1.50	1.00	1.30	0.80	0.50
			11-17	Urban	2.00	0.57	0.14	0.16	0.18	0.35	1.00	2.00	2.00	1.50	1.00	1.00	1.00	1.00
				Total/*Weighted Avg.*	**3.50**	**1.00**	***0.14***	***0.17***	***0.17***	***0.44***	***0.76***	***1.33***	***1.49***	***1.50***	***0.72***	***0.81***	***0.70***	***0.65***
4	135	180	41, 61	Deciduous Forest	0.75	0.21	0.12	0.12	0.12	0.50	0.70	0.30	1.00	1.50	1.00	1.30	0.80	0.50
			11-17	Urban	2.75	0.79	0.14	0.16	0.18	0.35	1.00	2.00	2.00	1.50	1.00	1.00	1.00	1.00
				Total/*Weighted Avg.*	**3.50**	**1.00**	***0.14***	***0.15***	***0.17***	***0.38***	***0.94***	***1.64***	***1.79***	***1.50***	***1.00***	***1.06***	***0.96***	***0.89***
5	180	225	41, 61	Deciduous Forest	0.94	0.27	0.12	0.12	0.12	0.50	0.70	0.30	1.00	1.50	1.00	1.30	0.80	0.50
			11-17	Urban	2.56	0.73	0.14	0.16	0.18	0.35	1.00	2.00	2.00	1.50	1.00	1.00	1.00	1.00
				Total/*Weighted Avg.*	**3.50**	**1.00**	***0.13***	***0.15***	***0.16***	***0.39***	***0.92***	***1.54***	***1.73***	***1.50***	***1.00***	***1.08***	***0.95***	***0.87***
6	225	270	21	Cultivated Land	0.88	0.25	0.14	0.20	0.18	0.60	0.30	0.50	0.70	1.50	0.03	0.20	0.05	0.01
			41, 61	Deciduous Forest	0.75	0.21	0.12	0.12	0.12	0.50	0.70	0.30	1.00	1.50	1.00	1.30	0.80	0.50
			75	Strip Mines	0.50	0.14	0.30	0.28	0.28	0.45	3.00	4.00	6.00	6.00	0.30	0.30	0.30	0.15
			11-17	Urban	1.37	0.39	0.14	0.16	0.18	0.35	1.00	2.00	2.00	1.50	1.00	1.00	1.00	1.00
				Total/*Weighted Avg.*	**3.50**	**1.00**	***0.16***	***0.18***	***0.18***	***0.46***	***1.05***	***1.54***	***2.03***	***2.14***	***0.66***	***0.76***	***0.62***	***0.52***
7	270	315	21	Cultivated Land	2.99	0.85	0.14	0.20	0.18	0.60	0.30	0.50	0.70	1.50	0.03	0.20	0.05	0.01
			41, 61	Deciduous Forest	0.38	0.11	0.12	0.12	0.12	0.50	0.70	0.30	1.00	1.50	1.00	1.30	0.80	0.50
			11-17	Urban	0.13	0.04	0.14	0.16	0.18	0.35	1.00	2.00	2.00	1.50	1.00	1.00	1.00	1.00
				Total/*Weighted Avg.*	**3.50**	**1.00**	***0.14***	***0.19***	***0.17***	***0.58***	***0.37***	***0.53***	***0.78***	***1.50***	***0.17***	***0.35***	***0.17***	***0.10***
8	315	360	21	Cultivated Land	2.94	0.84	0.14	0.20	0.18	0.60	0.30	0.50	0.70	1.50	0.03	0.20	0.05	0.01
			41, 61	Deciduous Forest	0.56	0.16	0.12	0.12	0.12	0.50	0.70	0.30	1.00	1.50	1.00	1.30	0.80	0.50
				Total/*Weighted Avg.*	**3.50**	**1.00**	***0.14***	***0.19***	***0.17***	***0.58***	***0.36***	***0.47***	***0.75***	***1.50***	***0.19***	***0.38***	***0.17***	***0.09***

Sector directions reference direction from which the wind is blowing.

Truck Roadway Volume Source Parameter Calculation

Step 1: Adjusted Width of Road				
Road Width (ft) of	39	+ 20 ft (6 m) =	59	ft
Step 2: Maximum No. of Sources				
Road Length (ft) of	2957	/ Adj. Width =	50	
Step 3: Height of Volume				
Vehicle height (ft) of	15	X 2 =	30	ft
Step 4: Initial Sigma Y				
Adjusted road width (ft) of	59	/ 2.15 =	27.61	ft
Step 5: Initial Sigma Z				
Height of volume (ft) of	30	/ 2.15 =	13.95	ft
Step 6: Height of Release				
Height of volume (ft) of	30	/ 2 =	15	ft
Step 7: Emission rate				
Total TSP emission rate (lb/hr) of	1.646771	/# sources =	0.033608	lb/hr
Total PM10 emission rate (lb/hr) of	0.320496	/# sources =	0.006541	lb/hr
Total P2.5 emission rate (lb/hr) of	0.047443	/# sources =	0.00096822	lb/hr

59.14 min. distance between sources (ft)

Coal/Coke/Coker Handling Volume Source Parameter Calculation

		Source Dimensions					Initial Dispersion Coefficients		
Source ID	Source Description	Length (ft)	Width (ft)	Square Root of Area (ft)	Structure Height/Vertical Dimension (ft)	Release Height (ft)	Initial Horizontal Dimension s_Y (ft)	Initial Vertical Dimension s_Z (ft)	Note
CCFUG1	Coke Drums DCU1	10.00	10.00	10.00	160.00	80.00	2.33	74.42	Elevated source on or adjacent to building
CCFUG2	DCUI Movement	10.00	10.00	10.00	10.00	5.00	2.33	2.33	Elevated source not on a building
CCFUG3	DCUI Drop	10.00	10.00	10.00	10.00	10.00	2.33	2.33	Elevated source not on a building
CCFUG4	DCUI Grinder Drop	10.00	10.00	10.00	10.00	5.00	2.33	2.33	Elevated source not on a building
CCFUG5	Coke Drums DCU2	10.00	10.00	10.00	160.00	80.00	2.33	74.42	Elevated source on or adjacent to building
CCFUG6	DCU2 Movement	10.00	10.00	10.00	10.00	5.00	2.33	2.33	Elevated source not on a building
CCFUG7	DCU2 Drop	10.00	10.00	10.00	10.00	10.00	2.33	2.33	Elevated source not on a building
CCFUG8	DCU2 Grinder Drop	10.00	10.00	10.00	10.00	5.00	2.33	2.33	Elevated source not on a building
CCFUG9	Slag Drop 1	10.00	10.00	10.00	10.00	15.00	2.33	2.33	Elevated source not on a building
CCFUG10	Flux Drop 1	10.00	10.00	10.00	10.00	5.00	2.33	2.33	Elevated source not on a building
CCFUG11	DCUI Drop Storage	10.00	10.00	10.00	10.00	57.50	2.33	2.33	Elevated source not on a building
CCFUG12	DCU2 Drop Storage	10.00	10.00	10.00	10.00	57.50	2.33	2.33	Elevated source not on a building
CCFUG13	Railcar Unloading 1	10.00	10.00	10.00	10.00	57.50	2.33	2.33	Elevated source not on a building
CCFUG14	Railcar Unloading 2	10.00	10.00	10.00	10.00	57.50	2.33	2.33	Elevated source not on a building
CCFUG15	Storage to Feed	10.00	10.00	10.00	10.00	52.50	2.33	2.33	Elevated source not on a building
CCFUG16	Slag Drop 2	10.00	10.00	10.00	10.00	50.00	2.33	2.33	Elevated source not on a building
CCFUG17	Flux Drop 2	10.00	10.00	10.00	10.00	57.50	2.33	2.33	Elevated source not on a building
COKECRG1	Coker Charge Tank 1	10.00	10.00	10.00	44.00	44.00	2.33	20.47	Elevated source on or adjacent to building
COKECRG2	Coker Charge Tank 2	10.00	10.00	10.00	44.00	44.00	2.33	20.47	Elevated source on or adjacent to building

Sigma Y values calculated as the square root of the area, or average length of side, divided by 4.3 (Table 3-1 of AERMOD Manual for Single Volume Source).

Sigma Z values for elevated sources on or adjacent to a building calculated as the building height divided by 2.15 (Table 3-1 of AERMOD Manual for Elevated Source on or Adjacent to Building).

Sigma Z values for elevated sources not on or adjacent to a building calculated as the initial vertical dimension of source divided by 4.3 (Table 3-1 of AERMOD Manual for Elevated Source Not on or Adjacent to Building).

Release height equal to center of volume, or 1/2 sigma z value, for elevated sources on or adjacent to a building. Except for the coker charge releases which are at the top of the tank.

Hyperion Sources (NAD27, Zone 14)
Point Sources

Model Source No.	Analysis	Source ID	Stack Release Type	Source Description	Easting (X) (m)	Northing (Y) (m)	Base Elevation (ft)	Stack Height (ft)	Temp. (°F)	Exit Velocity (ft/sec)	Stack Diameter (ft)	PMTEN (lb/hr)	PM25 (PMF) (lb/hr)	SO2 (lb/hr)	NOX (lb/hr)	CO (lb/hr)	NH3 (lb/hr)
1	SIGNIF,NAAQS&INC	U1CRDH	DEFAULT	CDU/VDU Crude Charge Htr. 1	686266.88	4742708.00	1220	175	426	21.2	13.0	3.976	3.976	2.454	3.181	21.206	1.170
2	SIGNIF,NAAQS&INC	U2CRDH	DEFAULT	CDU/VDU Crude Charge Htr. 2	686521.00	4742715.00	1220	175	426	21.2	13.0	3.976	3.976	2.454	3.181	21.206	1.170
3	SIGNIF,NAAQS&INC	U1VACH	DEFAULT	CDU/VDU Vacuum Charge Htr. 1	686195.81	4742709.00	1220	175	426	22.7	8.0	1.610	1.610	0.994	1.288	8.586	0.474
4	SIGNIF,NAAQS&INC	U2VACH	DEFAULT	CDU/VDU Vacuum Charge Htr. 2	686448.56	4742715.00	1220	175	426	22.7	8.0	1.610	1.610	0.994	1.288	8.586	0.474
5	SIGNIF,NAAQS&INC	U6CRGH	DEFAULT	NHT with Splitter Charge Htr.	686332.94	4742316.50	1220	175	460	21.9	8.0	1.497	1.497	0.924	1.198	7.984	0.440
6	SIGNIF,NAAQS&INC	U6SRBH	DEFAULT	NHT with Splitter Stripper Re Htr.	686319.50	4742316.50	1220	175	460	24.2	7.0	1.266	1.266	0.781	1.013	6.751	0.372
7	SIGNIF,NAAQS&INC	U6STRH	DEFAULT	NHT with Splitter	686305.38	4742316.50	1220	175	460	21.4	9.0	1.851	1.851	1.143	1.481	9.874	0.545
8	SIGNIF,NAAQS&INC	U7CRGH	DEFAULT	DHT Combined Feed Htr.	686426.88	4742313.00	1220	175	426	26.4	6.0	1.054	1.054	0.651	0.843	5.622	0.310
9	SIGNIF,NAAQS&INC	U8COKH1	DEFAULT	Delayed Coker Unit Drum Pair 1-1	686428.13	4741873.00	1220	220	426	20.3	9.0	1.818	1.818	1.122	1.455	9.698	0.535
10	SIGNIF,NAAQS&INC	U9COKH1	DEFAULT	Delayed Coker Unit Drum Pair 1-2	686428.69	4741896.00	1220	220	426	20.3	9.0	1.818	1.818	1.122	1.455	9.698	0.535
11	SIGNIF,NAAQS&INC	U8COKH2	DEFAULT	Delayed Coker Unit Drum Pair 2-1	686429.88	4741675.00	1220	220	426	20.3	9.0	1.818	1.818	1.122	1.455	9.698	0.535
12	SIGNIF,NAAQS&INC	U9COKH2	DEFAULT	Delayed Coker Unit Drum Pair 2-2	686429.31	4741698.50	1220	220	426	20.3	9.0	1.818	1.818	1.122	1.455	9.698	0.535
13	SIGNIF,NAAQS&INC	U13CRGH1	DEFAULT	CCR Platforming Unit 1	686336.81	4742516.50	1220	150	426	24.7	15.0	6.184	6.184	3.817	4.947	32.981	1.819
14	SIGNIF,NAAQS&INC	U14CRGH1	DEFAULT	CCR Platforming Unit 2	686357.00	4742517.00	1220	150	426	24.7	15.0	6.184	6.184	3.817	4.947	32.981	1.819
15	SIGNIF,NAAQS&INC	U13CRGH2	DEFAULT	CCR Platforming No. 2 Unit 1	686513.63	4742521.50	1220	150	426	23.1	12.0	3.696	3.696	2.281	2.957	19.714	1.087
16	SIGNIF,NAAQS&INC	U14CRGH2	DEFAULT	CCR Platforming No. 2 Unit 2	686536.88	4742521.50	1220	150	426	23.1	12.0	3.696	3.696	2.281	2.957	19.714	1.087
17	SIGNIF,NAAQS&INC	U13RSRH	DEFAULT	CCR Reformate Splitter	686293.69	4742520.50	1220	150	802	20.7	8.0	1.035	1.035	0.639	0.828	5.520	0.304
18	SIGNIF,NAAQS&INC	U17S1H1	DEFAULT	Hydrocracker Stg 1 Htr Trn 1-1	686739.63	4742618.00	1220	200	650	21.8	5.0	0.501	0.501	0.309	1.672	2.674	0.000
19	SIGNIF,NAAQS&INC	U18S1H1	DEFAULT	Hydrocracker Stg 1 Htr Trn 1-2	686912.13	4742623.00	1220	200	650	21.8	5.0	0.501	0.501	0.309	1.672	2.674	0.000
20	SIGNIF,NAAQS&INC	U17S1H2	DEFAULT	Hydrocracker Stg 1 Htr Trn 2-1	686729.44	4742618.00	1220	200	650	21.8	5.0	0.501	0.501	0.309	1.672	2.674	0.000
21	SIGNIF,NAAQS&INC	U18S1H2	DEFAULT	Hydrocracker Stg 1 Htr Trn 2-2	686903.25	4742623.00	1220	200	650	21.8	5.0	0.501	0.501	0.309	1.672	2.674	0.000
22	SIGNIF,NAAQS&INC	U17S1H3	DEFAULT	Hydrocracker Stg 1 Htr Trn 3-1	686718.00	4742618.00	1220	200	650	21.8	5.0	0.501	0.501	0.309	1.672	2.674	0.000
23	SIGNIF,NAAQS&INC	U18S1H3	DEFAULT	Hydrocracker Stg 1 Htr Trn 3-2	686892.75	4742623.00	1220	200	650	21.8	5.0	0.501	0.501	0.309	1.672	2.674	0.000
24	SIGNIF,NAAQS&INC	U17S2H1	DEFAULT	Hydrocracker Stg 2 Htr Trn 1-1	686706.50	4742618.00	1220	200	474	27.8	4.0	0.487	0.487	0.300	1.623	2.596	0.000
25	SIGNIF,NAAQS&INC	U18S2H1	DEFAULT	Hydrocracker Stg 2 Htr Trn 1-2	686880.94	4742623.00	1220	200	474	27.8	4.0	0.487	0.487	0.300	1.623	2.596	0.000
26	SIGNIF,NAAQS&INC	U17S2H2	DEFAULT	Hydrocracker Stg 2 Htr Trn 2-1	686695.69	4742618.00	1220	200	474	27.8	4.0	0.487	0.487	0.300	1.623	2.596	0.000
27	SIGNIF,NAAQS&INC	U18S2H2	DEFAULT	Hydrocracker Stg 2 Htr Trn 2-2	686870.75	4742623.00	1220	200	474	27.8	4.0	0.487	0.487	0.300	1.623	2.596	0.000
28	SIGNIF,NAAQS&INC	U17FFH	DEFAULT	Hydrocracker Frac Section Htr 1	686737.69	4742694.50	1220	200	532	21.6	16.0	5.066	5.066	3.127	4.053	27.021	1.490
29	SIGNIF,NAAQS&INC	U18FFH	DEFAULT	Hydrocracker Frac Section Htr 2	686909.94	4742699.00	1220	200	532	21.6	16.0	5.066	5.066	3.127	4.053	27.021	1.490
30	SIGNIF,NAAQS&INC	U20CRGH	DEFAULT	Oleflex Heater	686609.63	4742305.50	1220	200	539	20.5	15.0	4.533	4.533	2.798	3.627	24.177	1.334
31	SIGNIF,NAAQS&INC	U26TO1	DEFAULT	SRU TO 1	686423.31	4741961.50	1220	100	525	23.4	6.0	0.609	0.609	28.605	6.842	37.229	0.000
32	SIGNIF,NAAQS&INC	U26TO2	DEFAULT	SRU TO 2	686461.13	4741961.50	1220	100	525	23.4	6.0	0.609	0.609	28.605	6.842	37.229	0.000
33	SIGNIF,NAAQS&INC	U26TO3	DEFAULT	SRU TO 3	686506.94	4741963.00	1220	100	525	23.4	6.0	0.609	0.609	28.605	6.842	37.229	0.000
34	SIGNIF,NAAQS&INC	U26TO4	DEFAULT	SRU TO 4	686543.81	4741963.00	1220	100	525	23.4	6.0	0.609	0.609	28.605	6.842	37.229	0.000
35	SIGNIF,NAAQS&INC	FLARE1	DEFAULT	Refinery Flare Pilot 1	687411.06	4742269.00	1220	213	1983	18.4	4.0	0.006	0.006	0.005	0.068	0.370	0.000
36	SIGNIF,NAAQS&INC	FLARE2	DEFAULT	Refinery Flare Pilot 2	687417.19	4742108.50	1220	213	1983	18.4	4.0	0.006	0.006	0.005	0.068	0.370	0.000
37	SIGNIF,NAAQS&INC	FLARE3	DEFAULT	Refinery Flare Pilot 3	687565.88	4742266.00	1220	213	1983	18.4	4.0	0.006	0.006	0.005	0.068	0.370	0.000
38	SIGNIF,NAAQS&INC	FLARE4	DEFAULT	Refinery Flare Pilot 4	687571.00	4742105.00	1220	213	1983	18.4	4.0	0.006	0.006	0.005	0.068	0.370	0.000
39	SIGNIF,NAAQS&INC	IGCCCT1	DEFAULT	Power Island CT 1	686874.25	4741885.50	1220	200	275	75.0	13.4	21.362	21.362	1.533	22.159	6.423	6.499
40	SIGNIF,NAAQS&INC	IGCCCT2	DEFAULT	Power Island CT 2	686904.00	4741885.50	1220	200	275	75.0	13.4	21.362	21.362	1.533	22.159	6.423	6.499
41	SIGNIF,NAAQS&INC	IGCCCT3	DEFAULT	Power Island CT 3	686933.75	4741885.50	1220	200	275	75.0	13.4	21.362	21.362	1.533	22.159	6.423	6.499
42	SIGNIF,NAAQS&INC	IGCCCT4	DEFAULT	Power Island CT 4	686962.88	4741885.50	1220	200	275	75.0	13.4	21.362	21.362	1.533	22.159	6.423	6.499
43	SIGNIF,NAAQS&INC	IGCCDB1	DEFAULT	Power Island Duct Burner 1	686874.25	4741885.50	1220	200	275	75	13.4	15.540	15.540	4.457	7.676	4.672	4.728
44	SIGNIF,NAAQS&INC	IGCCDB2	DEFAULT	Power Island Duct Burner 2	686904.00	4741885.50	1220	200	275	75	13.4	15.540	15.540	4.457	7.676	4.672	4.728
45	SIGNIF,NAAQS&INC	IGCCDB3	DEFAULT	Power Island Duct Burner 3	686933.75	4741885.50	1220	200	275	75	13.4	15.540	15.540	4.457	7.676	4.672	4.728
46	SIGNIF,NAAQS&INC	IGCCDB4	DEFAULT	Power Island Duct Burner 4	686962.88	4741885.50	1220	200	275	75	13.4	15.540	15.540	4.457	7.676	4.672	4.728
47	SIGNIF,NAAQS&INC	IGCCSV1	DEFAULT	Power Island Startup Vent 1	686860.00	4741711.00	1220	200	236	41.6	3.5	0.109	0.109	0.114	1.224	6.660	0.000
48	SIGNIF,NAAQS&INC	IGCCSV2	DEFAULT	Power Island Startup Vent 2	686874.00	4741711.00	1220	200	236	41.6	3.5	0.109	0.109	0.114	1.224	6.660	0.000
49	SIGNIF,NAAQS&INC	IGCCSV3	DEFAULT	Power Island Startup Vent 3	686888.00	4741711.00	1220	200	236	41.6	3.5	0.109	0.109	0.114	1.224	6.660	0.000
50	SIGNIF,NAAQS&INC	IGCCSV4	DEFAULT	Power Island Startup Vent 4	686902.00	4741711.00	1220	200	236	41.6	3.5	0.109	0.109	0.114	1.224	6.660	0.000
51	SIGNIF,NAAQS&INC	IGCCSV5	DEFAULT	Power Island Startup Vent 5	686916.00	4741711.00	1220	200	236	41.6	3.5	0.109	0.109	0.114	1.224	6.660	0.000
52	SIGNIF,NAAQS&INC	IGCCSV6	DEFAULT	Power Island Startup Vent 6	686930.00	4741711.00	1220	200	236	41.6	3.5	0.109	0.109	0.114	1.224	6.660	0.000
53	SIGNIF,NAAQS&INC	IGCCFL1	DEFAULT	Power Island Flare Pilot	687172.69	4741886.00	1220	213	1836	0.8	5.0	0.022	0.022	0.006	0.068	0.370	0.000
54	SIGNIF,NAAQS&INC	IGCCFL2	DEFAULT	Power Island Flare	687172.69	4741886.00	1220	213	1832	508.8	5.0	4.762	4.762	15.729	53.477	290.98	0.000
55	SIGNIF,NAAQS&INC	IGCCAGR	DEFAULT	Power Island Acid Gas Removal	687115.00	4741757.00	1220	200	100	63.64	10.0	0.000	0.000	0.000	0.000	2,279.29	0.000
56	SIGNIF,NAAQS&INC	U13REGN1	DEFAULT	Reformer Regenerator Unit 1	686366.63	4742475.50	1220	160	100	13.0	1.4	0.010	0.010	0.000	0.080	0.490	0.000
57	SIGNIF,NAAQS&INC	U13REGN2	DEFAULT	Reformer Regenerator Unit 2	686546.56	4742481.00	1220	160	100	13.0	1.4	0.010	0.010	0.000	0.080	0.490	0.000
58	SIGNIF,NAAQS&INC	U20REGN	DEFAULT	Oleflex Regenerator	686588.69	4742265.50	1220	160	100	18.0	0.5	0.002	0.002	0.000	0.015	0.089	0.000
59	SIGNIF,NAAQS&INC	WWTP	DEFAULT	Waste Water Treatment Oxidizer	687062.56	4742137.00	1220	50	500	53.7	0.3	0.000	0.000	0.000	5.000	0.000	0.000
60	SIGNIF,NAAQS&INC	COAL1	DEFAULT	North FF-1	686560.88	4741874.00	1220	115	100	50.96	5.0	2.425	2.425	0.000	0.000	0.000	0.000
61	SIGNIF,NAAQS&INC	COAL2	DEFAULT	North FF-2	686559.88	4741810.00	1220	115	100	50.96	5.0	2.425	2.425	0.000	0.000	0.000	0.000
62	SIGNIF,NAAQS&INC	COAL3	DEFAULT	South FF-1	686561.94	4741694.00	1220	115	100	50.96	5.0	2.425	2.425	0.000	0.000	0.000	0.000
63	SIGNIF,NAAQS&INC	COAL4	DEFAULT	South FF-2	686562.94	4741610.00	1220	115	100	50.96	5.0	2.425	2.425	0.000	0.000	0.000	0.000
64	SIGNIF,NAAQS&INC	COAL5	DEFAULT	Rail Unloading Bldg	686652.00	4741525.00	1220	40	80	47.18	3.0	0.838	0.838	0.000	0.000	0.000	0.000
65	SIGNIF,NAAQS&INC	COAL6	DEFAULT	Rail Unloading Bldg	686774.19	4741521.00	1220	40	80	23.59	3.0	0.419	0.419	0.000	0.000	0.000	0.000

Hyperion Sources (NAD27, Zone 14)
Point Sources

Model Source No.	Analysis	Source ID	Stack Release Type	Source Description	Easting (X) (m)	Northing (Y) (m)	Base Elevation (ft)	Stack Height (ft)	Temp. (°F)	Exit Velocity (ft/sec)	Stack Diameter (ft)	PMTEN (lb/hr)	PM25 (PMF) (lb/hr)	SO2 (lb/hr)	NOX (lb/hr)	CO (lb/hr)	NH3 (lb/hr)
66	SIGNIF,NAAQS&INC	COAL7	DEFAULT	Rail Loading Bldg	686812.50	4741519.00	1220	40	80	23.59	3.0	0.419	0.419	0.000	0.000	0.000	0.000
67	SIGNIF,NAAQS&INC	COOL1	DEFAULT	Cooling Tower Cell 1	687188.13	4742281.00	1220	50	-460	22.00	35.0	0.094	0.094	0.000	0.000	0.000	0.000
68	SIGNIF,NAAQS&INC	COOL2	DEFAULT	Cooling Tower Cell 2	687200.75	4742281.00	1220	50	-460	22.00	35.0	0.094	0.094	0.000	0.000	0.000	0.000
69	SIGNIF,NAAQS&INC	COOL3	DEFAULT	Cooling Tower Cell 3	687187.38	4742266.00	1220	50	-460	22.00	35.0	0.094	0.094	0.000	0.000	0.000	0.000
70	SIGNIF,NAAQS&INC	COOL4	DEFAULT	Cooling Tower Cell 4	687200.75	4742266.50	1220	50	-460	22.00	35.0	0.094	0.094	0.000	0.000	0.000	0.000
71	SIGNIF,NAAQS&INC	COOL5	DEFAULT	Cooling Tower Cell 5	687187.38	4742249.50	1220	50	-460	22.00	35.0	0.094	0.094	0.000	0.000	0.000	0.000
72	SIGNIF,NAAQS&INC	COOL6	DEFAULT	Cooling Tower Cell 6	687200.75	4742250.50	1220	50	-460	22.00	35.0	0.094	0.094	0.000	0.000	0.000	0.000
73	SIGNIF,NAAQS&INC	COOL7	DEFAULT	Cooling Tower Cell 7	687187.38	4742233.50	1220	50	-460	22.00	35.0	0.094	0.094	0.000	0.000	0.000	0.000
74	SIGNIF,NAAQS&INC	COOL8	DEFAULT	Cooling Tower Cell 8	687200.75	4742234.00	1220	50	-460	22.00	35.0	0.094	0.094	0.000	0.000	0.000	0.000
75	SIGNIF,NAAQS&INC	COOL9	DEFAULT	Cooling Tower Cell 9	687187.38	4742218.50	1220	50	-460	22.00	35.0	0.094	0.094	0.000	0.000	0.000	0.000
76	SIGNIF,NAAQS&INC	COOL10	DEFAULT	Cooling Tower Cell 10	687200.75	4742219.50	1220	50	-460	22.00	35.0	0.094	0.094	0.000	0.000	0.000	0.000
77	SIGNIF,NAAQS&INC	COOL11	DEFAULT	Cooling Tower Cell 11	687187.38	4742206.50	1220	50	-460	22.00	35.0	0.094	0.094	0.000	0.000	0.000	0.000
78	SIGNIF,NAAQS&INC	COOL12	DEFAULT	Cooling Tower Cell 12	687200.75	4742205.50	1220	50	-460	22.00	35.0	0.094	0.094	0.000	0.000	0.000	0.000
79	SIGNIF,NAAQS&INC	COOL13	DEFAULT	Cooling Tower Cell 13	687186.69	4742194.00	1220	50	-460	22.00	35.0	0.094	0.094	0.000	0.000	0.000	0.000
80	SIGNIF,NAAQS&INC	FIREWP1	DEFAULT	Fire Water Pump No. 1	684740.00	4741479.00	1220	25	850	267.00	1.0	0.992	0.992	0.037	0.248	17.361	0.000
81	SIGNIF,NAAQS&INC	FIREWP2	DEFAULT	Fire Water Pump No. 2	684770.00	4741479.00	1220	25	850	267.00	1.0	0.992	0.992	0.037	0.248	17.361	0.000
82	SIGNIF,NAAQS&INC	GEN1	DEFAULT	Emergency Generator No. 1	687063.00	4742365.00	1220	25	950	109.00	1.0	0.265	0.265	0.010	0.066	4.630	0.000
83	SIGNIF,NAAQS&INC	GEN2	DEFAULT	Emergency Generator No. 2	687088.00	4742365.00	1220	25	950	109.00	1.0	0.265	0.265	0.010	0.066	4.630	0.000
84	SIGNIF,NAAQS&INC	GEN3	DEFAULT	Emergency Generator No. 3	687113.00	4742365.00	1220	25	950	109.00	1.0	0.265	0.265	0.010	0.066	4.630	0.000
85	SIGNIF,NAAQS&INC	GEN4	DEFAULT	Emergency Generator No. 4	687138.00	4742365.00	1220	25	950	109.00	1.0	0.265	0.265	0.010	0.066	4.630	0.000

Hyperion Sources
Volume Sources

Model Source No.	Analysis	Source ID	Source Description	Easting (X)	Northing (Y)	Base Elevation (ft)	Release Height (ft)	Horizontal Dimension (ft)	Vertical Dimension (ft)	PMTEN (lb/hr)	PM25 (PMF) (lb/hr)	SO2 (lb/hr)	NOX (lb/hr)	CO (lb/hr)	NH3 (lb/hr)
86	SIGNIF,NAAQS&INC	CCFUG1	Coke Drums DCU1	686493.56	4741895.00	1220	80.0	2.3	74.4	5.64E-02	8.54E-03	0.0000	0.0000	0.0000	0.0000
87	SIGNIF,NAAQS&INC	CCFUG2	DCUI Movement	686523.63	4741897.00	1220	5.0	2.3	2.3	5.64E-02	8.54E-03	0.0000	0.0000	0.0000	0.0000
88	SIGNIF,NAAQS&INC	CCFUG3	DCUI Drop	686522.56	4741862.00	1220	10.0	2.3	2.3	5.64E-02	8.54E-03	0.0000	0.0000	0.0000	0.0000
89	SIGNIF,NAAQS&INC	CCFUG4	DCUI Grinder Drop	686521.56	4741842.00	1220	5.0	2.3	2.3	5.84E-02	8.66E-03	0.0000	0.0000	0.0000	0.0000
90	SIGNIF,NAAQS&INC	CCFUG5	Coke Drums DCU2	686493.56	4741696.00	1220	80.0	2.3	74.4	5.64E-02	8.54E-03	0.0000	0.0000	0.0000	0.0000
91	SIGNIF,NAAQS&INC	CCFUG6	DCU2 Movement	686526.69	4741697.00	1220	5.0	2.3	2.3	5.64E-02	8.54E-03	0.0000	0.0000	0.0000	0.0000
92	SIGNIF,NAAQS&INC	CCFUG7	DCU2 Drop	686524.63	4741655.50	1220	10.0	2.3	2.3	5.64E-02	8.54E-03	0.0000	0.0000	0.0000	0.0000
93	SIGNIF,NAAQS&INC	CCFUG8	DCU2 Grinder Drop	686524.63	4741636.00	1220	5.0	2.3	2.3	5.84E-02	8.66E-03	0.0000	0.0000	0.0000	0.0000
94	SIGNIF,NAAQS&INC	CCFUG9	Slag Drop 1	686774.19	4741485.50	1220	15.0	2.3	2.3	9.38E-03	1.42E-03	0.0000	0.0000	0.0000	0.0000
95	SIGNIF,NAAQS&INC	CCFUG10	Flux Drop 1	686812.50	4741485.50	1220	5.0	2.3	2.3	1.88E-02	2.84E-03	0.0000	0.0000	0.0000	0.0000
96	SIGNIF,NAAQS&INC	CCFUG11	DCUI Drop Storage	686558.81	4741838.00	1220	57.5	2.3	2.3	7.91E-03	2.23E-03	0.0000	0.0000	0.0000	0.0000
97	SIGNIF,NAAQS&INC	CCFUG12	DCU2 Drop Storage	686562.94	4741653.50	1220	57.5	2.3	2.3	7.91E-03	2.23E-03	0.0000	0.0000	0.0000	0.0000
98	SIGNIF,NAAQS&INC	CCFUG13	Railcar Unloading 1	686639.56	4741482.50	1220	57.5	2.3	2.3	2.85E-03	8.05E-04	0.0000	0.0000	0.0000	0.0000
99	SIGNIF,NAAQS&INC	CCFUG14	Railcar Unloading 2	686636.50	4741557.00	1220	57.5	2.3	2.3	2.85E-03	8.05E-04	0.0000	0.0000	0.0000	0.0000
100	SIGNIF,NAAQS&INC	CCFUG15	Storage to Feed	686726.56	4741637.00	1220	52.5	2.3	2.3	2.85E-03	8.05E-04	0.0000	0.0000	0.0000	0.0000
101	SIGNIF,NAAQS&INC	CCFUG16	Slag Drop 2	686813.56	4741553.00	1220	50.0	2.3	2.3	2.85E-03	8.05E-04	0.0000	0.0000	0.0000	0.0000
102	SIGNIF,NAAQS&INC	CCFUG17	Flux Drop 2	686774.19	4741552.00	1220	57.5	2.3	2.3	2.85E-03	8.05E-04	0.0000	0.0000	0.0000	0.0000
103	SIGNIF,NAAQS&INC	COKECRG1	Coker Charge Tank 1	685490.19	4741641.00	1220	44.0	2.3	20.5	2.32E-01	2.32E-01	0.0000	0.0000	0.0000	0.0000
104	SIGNIF,NAAQS&INC	COKECRG2	Coker Charge Tank 2	685611.88	4741641.00	1220	44.0	2.3	20.5	2.32E-01	2.32E-01	0.0000	0.0000	0.0000	0.0000
105	SIGNIF,NAAQS&INC	ROAD1	Gasoline and Propane Customer Road	687810.50	4740339.50	1220	15.0	27.6	14.0	6.54E-03	9.68E-04	0.0000	0.0000	0.0000	0.0000
106	SIGNIF,NAAQS&INC	ROAD2	Gasoline and Propane Customer Road	687809.92	4740357.47	1220	15.0	27.6	14.0	6.54E-03	9.68E-04	0.0000	0.0000	0.0000	0.0000
107	SIGNIF,NAAQS&INC	ROAD3	Gasoline and Propane Customer Road	687809.35	4740375.45	1220	15.0	27.6	14.0	6.54E-03	9.68E-04	0.0000	0.0000	0.0000	0.0000
108	SIGNIF,NAAQS&INC	ROAD4	Gasoline and Propane Customer Road	687808.77	4740393.42	1220	15.0	27.6	14.0	6.54E-03	9.68E-04	0.0000	0.0000	0.0000	0.0000
109	SIGNIF,NAAQS&INC	ROAD5	Gasoline and Propane Customer Road	687808.20	4740411.40	1220	15.0	27.6	14.0	6.54E-03	9.68E-04	0.0000	0.0000	0.0000	0.0000
110	SIGNIF,NAAQS&INC	ROAD6	Gasoline and Propane Customer Road	687807.62	4740429.37	1220	15.0	27.6	14.0	6.54E-03	9.68E-04	0.0000	0.0000	0.0000	0.0000
111	SIGNIF,NAAQS&INC	ROAD7	Gasoline and Propane Customer Road	687807.05	4740447.34	1220	15.0	27.6	14.0	6.54E-03	9.68E-04	0.0000	0.0000	0.0000	0.0000
112	SIGNIF,NAAQS&INC	ROAD8	Gasoline and Propane Customer Road	687806.47	4740465.32	1220	15.0	27.6	14.0	6.54E-03	9.68E-04	0.0000	0.0000	0.0000	0.0000
113	SIGNIF,NAAQS&INC	ROAD9	Gasoline and Propane Customer Road	687805.90	4740483.29	1220	15.0	27.6	14.0	6.54E-03	9.68E-04	0.0000	0.0000	0.0000	0.0000
114	SIGNIF,NAAQS&INC	ROAD10	Gasoline and Propane Customer Road	687805.32	4740501.27	1220	15.0	27.6	14.0	6.54E-03	9.68E-04	0.0000	0.0000	0.0000	0.0000
115	SIGNIF,NAAQS&INC	ROAD11	Gasoline and Propane Customer Road	687804.75	4740519.24	1220	15.0	27.6	14.0	6.54E-03	9.68E-04	0.0000	0.0000	0.0000	0.0000
116	SIGNIF,NAAQS&INC	ROAD12	Gasoline and Propane Customer Road	687804.17	4740537.21	1220	15.0	27.6	14.0	6.54E-03	9.68E-04	0.0000	0.0000	0.0000	0.0000
117	SIGNIF,NAAQS&INC	ROAD13	Gasoline and Propane Customer Road	687803.60	4740555.19	1220	15.0	27.6	14.0	6.54E-03	9.68E-04	0.0000	0.0000	0.0000	0.0000
118	SIGNIF,NAAQS&INC	ROAD14	Gasoline and Propane Customer Road	687803.02	4740573.16	1220	15.0	27.6	14.0	6.54E-03	9.68E-04	0.0000	0.0000	0.0000	0.0000
119	SIGNIF,NAAQS&INC	ROAD15	Gasoline and Propane Customer Road	687800.86	4740589.47	1220	15.0	27.6	14.0	6.54E-03	9.68E-04	0.0000	0.0000	0.0000	0.0000
120	SIGNIF,NAAQS&INC	ROAD16	Gasoline and Propane Customer Road	687782.88	4740589.10	1220	15.0	27.6	14.0	6.54E-03	9.68E-04	0.0000	0.0000	0.0000	0.0000
121	SIGNIF,NAAQS&INC	ROAD17	Gasoline and Propane Customer Road	687764.90	4740588.73	1220	15.0	27.6	14.0	6.54E-03	9.68E-04	0.0000	0.0000	0.0000	0.0000
122	SIGNIF,NAAQS&INC	ROAD18	Gasoline and Propane Customer Road	687748.71	4740592.96	1220	15.0	27.6	14.0	6.54E-03	9.68E-04	0.0000	0.0000	0.0000	0.0000
123	SIGNIF,NAAQS&INC	ROAD19	Gasoline and Propane Customer Road	687735.70	4740605.37	1220	15.0	27.6	14.0	6.54E-03	9.68E-04	0.0000	0.0000	0.0000	0.0000
124	SIGNIF,NAAQS&INC	ROAD20	Gasoline and Propane Customer Road	687721.37	4740614.40	1220	15.0	27.6	14.0	6.54E-03	9.68E-04	0.0000	0.0000	0.0000	0.0000
125	SIGNIF,NAAQS&INC	ROAD21	Gasoline and Propane Customer Road	687703.39	4740614.02	1220	15.0	27.6	14.0	6.54E-03	9.68E-04	0.0000	0.0000	0.0000	0.0000
126	SIGNIF,NAAQS&INC	ROAD22	Gasoline and Propane Customer Road	687685.41	4740613.64	1220	15.0	27.6	14.0	6.54E-03	9.68E-04	0.0000	0.0000	0.0000	0.0000
127	SIGNIF,NAAQS&INC	ROAD23	Gasoline and Propane Customer Road	687667.43	4740613.26	1220	15.0	27.6	14.0	6.54E-03	9.68E-04	0.0000	0.0000	0.0000	0.0000
128	SIGNIF,NAAQS&INC	ROAD24	Gasoline and Propane Customer Road	687650.67	4740609.51	1220	15.0	27.6	14.0	6.54E-03	9.68E-04	0.0000	0.0000	0.0000	0.0000
129	SIGNIF,NAAQS&INC	ROAD25	Gasoline and Propane Customer Road	687643.75	4740594.86	1220	15.0	27.6	14.0	6.54E-03	9.68E-04	0.0000	0.0000	0.0000	0.0000
130	SIGNIF,NAAQS&INC	ROAD26	Gasoline and Propane Customer Road	687643.75	4740576.88	1220	15.0	27.6	14.0	6.54E-03	9.68E-04	0.0000	0.0000	0.0000	0.0000
131	SIGNIF,NAAQS&INC	ROAD27	Gasoline and Propane Customer Road	687648.18	4740560.60	1220	15.0	27.6	14.0	6.54E-03	9.68E-04	0.0000	0.0000	0.0000	0.0000
132	SIGNIF,NAAQS&INC	ROAD28	Gasoline and Propane Customer Road	687662.79	4740553.06	1220	15.0	27.6	14.0	6.54E-03	9.68E-04	0.0000	0.0000	0.0000	0.0000
133	SIGNIF,NAAQS&INC	ROAD29	Gasoline and Propane Customer Road	687680.77	4740553.19	1220	15.0	27.6	14.0	6.54E-03	9.68E-04	0.0000	0.0000	0.0000	0.0000
134	SIGNIF,NAAQS&INC	ROAD30	Gasoline and Propane Customer Road	687698.75	4740553.32	1220	15.0	27.6	14.0	6.54E-03	9.68E-04	0.0000	0.0000	0.0000	0.0000
135	SIGNIF,NAAQS&INC	ROAD31	Gasoline and Propane Customer Road	687716.74	4740553.45	1220	15.0	27.6	14.0	6.54E-03	9.68E-04	0.0000	0.0000	0.0000	0.0000
136	SIGNIF,NAAQS&INC	ROAD32	Gasoline and Propane Customer Road	687731.60	4740561.27	1220	15.0	27.6	14.0	6.54E-03	9.68E-04	0.0000	0.0000	0.0000	0.0000
137	SIGNIF,NAAQS&INC	ROAD33	Gasoline and Propane Customer Road	687744.57	4740573.71	1220	15.0	27.6	14.0	6.54E-03	9.68E-04	0.0000	0.0000	0.0000	0.0000
138	SIGNIF,NAAQS&INC	ROAD34	Gasoline and Propane Customer Road	687759.43	4740581.58	1220	15.0	27.6	14.0	6.54E-03	9.68E-04	0.0000	0.0000	0.0000	0.0000
139	SIGNIF,NAAQS&INC	ROAD35	Gasoline and Propane Customer Road	687777.41	4740581.80	1220	15.0	27.6	14.0	6.54E-03	9.68E-04	0.0000	0.0000	0.0000	0.0000
140	SIGNIF,NAAQS&INC	ROAD36	Gasoline and Propane Customer Road	687793.31	4740579.86	1220	15.0	27.6	14.0	6.54E-03	9.68E-04	0.0000	0.0000	0.0000	0.0000
141	SIGNIF,NAAQS&INC	ROAD37	Gasoline and Propane Customer Road	687793.85	4740561.89	1220	15.0	27.6	14.0	6.54E-03	9.68E-04	0.0000	0.0000	0.0000	0.0000
142	SIGNIF,NAAQS&INC	ROAD38	Gasoline and Propane Customer Road	687794.39	4740543.91	1220	15.0	27.6	14.0	6.54E-03	9.68E-04	0.0000	0.0000	0.0000	0.0000
143	SIGNIF,NAAQS&INC	ROAD39	Gasoline and Propane Customer Road	687794.92	4740525.94	1220	15.0	27.6	14.0	6.54E-03	9.68E-04	0.0000	0.0000	0.0000	0.0000
144	SIGNIF,NAAQS&INC	ROAD40	Gasoline and Propane Customer Road	687795.46	4740507.96	1220	15.0	27.6	14.0	6.54E-03	9.68E-04	0.0000	0.0000	0.0000	0.0000
145	SIGNIF,NAAQS&INC	ROAD41	Gasoline and Propane Customer Road	687796.00	4740489.98	1220	15.0	27.6	14.0	6.54E-03	9.68E-04	0.0000	0.0000	0.0000	0.0000
146	SIGNIF,NAAQS&INC	ROAD42	Gasoline and Propane Customer Road	687796.53	4740472.01	1220	15.0	27.6	14.0	6.54E-03	9.68E-04	0.0000	0.0000	0.0000	0.0000
147	SIGNIF,NAAQS&INC	ROAD43	Gasoline and Propane Customer Road	687797.07	4740454.03	1220	15.0	27.6	14.0	6.54E-03	9.68E-04	0.0000	0.0000	0.0000	0.0000

Hyperion Sources
Volume Sources

Model Source No.	Analysis	Source ID	Source Description	Easting (X)	Northing (Y)	Base Elevation (ft)	Release Height (ft)	Horizontal Dimension (ft)	Vertical Dimension (ft)	PMTEN (lb/hr)	PM25 (PMF) (lb/hr)	SO2 (lb/hr)	NOX (lb/hr)	CO (lb/hr)	NH3 (lb/hr)
148	SIGNIF,NAAQS&INC	ROAD44	Gasoline and Propane Customer Road	687797.60	4740436.06	1220	15.0	27.6	14.0	6.54E-03	9.68E-04	0.0000	0.0000	0.0000	0.0000
149	SIGNIF,NAAQS&INC	ROAD45	Gasoline and Propane Customer Road	687798.14	4740418.08	1220	15.0	27.6	14.0	6.54E-03	9.68E-04	0.0000	0.0000	0.0000	0.0000
150	SIGNIF,NAAQS&INC	ROAD46	Gasoline and Propane Customer Road	687798.68	4740400.11	1220	15.0	27.6	14.0	6.54E-03	9.68E-04	0.0000	0.0000	0.0000	0.0000
151	SIGNIF,NAAQS&INC	ROAD47	Gasoline and Propane Customer Road	687799.21	4740382.13	1220	15.0	27.6	14.0	6.54E-03	9.68E-04	0.0000	0.0000	0.0000	0.0000
152	SIGNIF,NAAQS&INC	ROAD48	Gasoline and Propane Customer Road	687799.75	4740364.16	1220	15.0	27.6	14.0	6.54E-03	9.68E-04	0.0000	0.0000	0.0000	0.0000
153	SIGNIF,NAAQS&INC	ROAD49	Gasoline and Propane Customer Road	687800.29	4740346.18	1220	15.0	27.6	14.0	6.54E-03	9.68E-04	0.0000	0.0000	0.0000	0.0000

	PM10	PM25	SO2	NOx	CO	NH3
lb/hr ->	**237.00**	**236.29**	**194.75**	**277.99**	**3203.85**	**62.43**
tpd ->	**2.84**		**2.34**	**3.34**		

Hyperion Off-Site Sources
Point Sources

Model Source No.	Analysis	Source ID	Stack Release Type	Source Description	Easting (X) (m)	Northing (Y) (m)	Base Elevation (ft)	Stack Height (ft)	Temp. (°F)	Exit Velocity (ft/sec)	Stack Diameter (ft)	PMTEN (lb/hr)	PM25 (PMF) (lb/hr)	SO2 (lb/hr)	NOX (lb/hr)	CO (lb/hr)	Distance from Hyperion (km)
154	NAAQS&INC	SD1	DEFAULT	University of South Dakota - Boilers	669691.36	4739049.32	1230.0	80.0	350	2.03	14.0	1.39	1.39	51.62	22.81	13.36	15.4
155	NAAQS&INC	SD2	DEFAULT	Northwestern Public Service Co. - Generators	634450.90	4750264.45	1194.2	22.4	700	195.95	1.7	7.99	7.99	69.63	440.87	117.12	50.4
156	NAAQS	SD3	DEFAULT	Basin Electric Power Coop - Turbines	664075.37	4751355.67	1285.9	53.1	990	109.67	17.6	73.06	73.06	670.78	1477.63	5.48	21.7
157	NAAQS&INC	IA1	DEFAULT	Midamerican George Neal North - EP3	715822.62	4689110.50	1071.7	400.0	325	107.60	20.0	0.00	0.00	6025.20	2510.50	6326.50	62.9
158	NAAQS&INC	IA2	DEFAULT	Midamerican George Neal North - EP1	715917.31	4688913.00	1070.0	225.0	320	129.00	9.4	368.01	368.01	1635.60	1302.20	1717.40	63.2
159	NAAQS&INC	IA3	DEFAULT	Midamerican George Neal North - EP2	715936.50	4688820.00	1069.6	300.0	290	104.02	15.2	831.87	831.87	3697.20	1540.50	5028.19	63.2
160	NAAQS&INC	IA4	DEFAULT	Midamerican George Neal North - EP9	715919.50	4688961.50	1070.7	165.0	70	70.70	3.7	7.68	7.68	0.00	0.00	0.00	63.1
161	NAAQS&INC	IA5	DEFAULT	Midamerican George Neal North - EP37	715899.19	4689070.50	1072.0	105.0	70	0.00	0.9	0.23	0.23	0.00	0.00	0.00	63.0
162	NAAQS&INC	IA6	DEFAULT	Midamerican George Neal North - EP38	715899.69	4689071.00	1072.0	105.0	70	0.00	0.9	0.23	0.23	0.00	0.00	0.00	63.0
163	NAAQS&INC	IA7	DEFAULT	Midamerican George Neal North - EP11	715947.00	4688907.00	1070.0	180.0	70	78.50	3.0	2.65	2.65	0.00	0.00	0.00	63.2
164	NAAQS&INC	IA8	DEFAULT	Midamerican George Neal North - EP10	715958.50	4688883.00	1070.3	14.0	70	52.10	3.5	5.16	5.16	0.00	0.00	0.00	63.2
165	NAAQS&INC	IA9	DEFAULT	Midamerican George Neal North - EP8	716089.69	4688845.00	1071.6	28.0	70	101.50	2.7	5.83	5.83	0.00	0.00	0.00	63.3
166	NAAQS&INC	IA10	DEFAULT	Midamerican George Neal North - EP7	716196.69	4688788.50	1072.2	19.0	70	54.00	2.7	3.10	3.10	0.00	0.00	0.00	63.4
167	NAAQS&INC	IA11	DEFAULT	Midamerican George Neal North - EP6	716246.69	4688571.00	1070.0	13.0	70	63.70	2.7	3.09	3.09	0.00	0.00	0.00	63.6
168	NAAQS&INC	IA12	DEFAULT	Midamerican George Neal North - EP36	715979.50	4688846.50	1070.0	116.0	70	0.00	0.9	0.28	0.28	0.00	0.00	0.00	63.2
169	NAAQS&INC	IA13	DEFAULT	Midamerican George Neal North - EP35	715978.62	4688845.50	1070.0	116.0	70	0.00	0.9	0.28	0.28	0.00	0.00	0.00	63.2
170	NAAQS&INC	IA14	DEFAULT	Midamerican George Neal South - EP3	717523.88	4686335.00	1072.0	469.0	237	67.30	25.0	690.00	690.00	8280.00	3450.00	8694.00	66.2
171	NAAQS&INC	IA15	DEFAULT	Midamerican George Neal South - EP6	717726.62	4686542.00	1070.7	227.5	70	0.00	2.1	0.00	0.00	0.00	0.00	0.00	66.1
172	NAAQS&INC	IA16	DEFAULT	Midamerican George Neal South - EP8	718023.19	4686690.50	1080.0	43.0	70	0.00	3.6	3.43	3.43	0.00	0.00	0.00	66.1
173	NAAQS&INC	IA17	DEFAULT	Midamerican George Neal South - EP7	718185.31	4686635.00	1079.6	89.0	70	0.00	3.1	10.71	10.71	0.00	0.00	0.00	66.3
174	NAAQS&INC	IA18	DEFAULT	Midamerican George Neal South - EP9	717563.31	4686469.00	1072.2	224.0	70	61.40	2.3	13.50	13.50	0.00	0.00	0.00	66.1
175	NAAQS&INC	IA19	DEFAULT	Midamerican George Neal South - EP10	718019.81	4686564.00	1079.0	8.0	70	0.00	3.9	15.60	15.60	0.00	0.00	0.00	66.2
176	NAAQS&INC	IA20	DEFAULT	Midamerican George Neal South - EP22	717652.31	4686295.50	1071.0	105.0	275	0.00	1.7	3.69	3.69	0.00	0.00	0.00	66.3
177	NAAQS&INC	IA21	DEFAULT	Midamerican George Neal South - EP23	717662.50	4686275.50	1071.0	105.0	275	0.00	1.7	3.69	3.69	0.00	0.00	0.00	66.3
178	NAAQS&INC	IA22	DEFAULT	Terra Nitrogen Port Neal - EP1	715926.00	4689498.00	1076.0	50.0	300	26.40	3.8	1659.15	1659.15	0.00	11.00	538.61	62.7
179	NAAQS&INC	IA23	DEFAULT	Terra Nitrogen Port Neal - EP1N	715926.00	4689498.00	1076.0	50.0	300	29.00	3.8	0.00	0.00	0.00	11.00	0.00	62.7
180	NAAQS&INC	IA24	DEFAULT	Terra Nitrogen Port Neal - EP2	715926.00	4689498.00	1076.0	50.0	300	26.40	3.8	0.00	0.00	0.00	11.00	0.00	62.7
181	NAAQS&INC	IA25	DEFAULT	Terra Nitrogen Port Neal - EP4	715926.00	4689498.00	1076.0	90.0	265	22.40	11.0	0.00	0.00	0.00	200.00	0.00	62.7
182	NAAQS&INC	IA26	DEFAULT	Terra Nitrogen Port Neal - EP7	715926.00	4689498.00	1076.0	72.0	500	46.00	3.3	0.00	0.00	0.00	50.60	0.00	62.7
183	NAAQS&INC	IA27	DEFAULT	Terra Nitrogen Port Neal - EP21	715926.00	4689498.00	1076.0	72.5	1500	4.70	8.1	0.00	0.00	0.00	3.00	0.00	62.7
184	NAAQS&INC	IA28	DEFAULT	Terra Nitrogen Port Neal - EP22	715926.00	4689498.00	1076.0	72.0	100	517.00	0.8	0.00	0.00	0.00	245.00	0.00	62.7
185	NAAQS&INC	IA29	DEFAULT	Terra Nitrogen Port Neal - EP25	715926.00	4689498.00	1076.0	120.0	330	86.00	3.3	0.00	0.00	0.00	50.60	0.00	62.7
186	NAAQS&INC	NE1	DEFAULT	Siouxland Ethanol - Thermal Oxidizer (dyer)	697765.00	4702873.00	1137.4	125.0	205	64.84	6.0	4.21	4.21	9.630	21.97	21.38	42.9
187	NAAQS&INC	NE2	DEFAULT	Siouxland Ethanol - Grain Unloading	697739.00	4702905.00	1137.6	40.0	65	67.56	3.5	0.19	0.19	0.000	0.00	0.00	42.9
188	NAAQS&INC	NE3	DEFAULT	Hammermilling Baghouse	697721.00	4702888.00	1139.3	40.0	65	52.24	2.7	0.42	0.42	0.000	0.00	0.00	42.9
189	NAAQS&INC	NE4	DEFAULT	Siouxland Ethanol - CO2 Scrubber	697659.00	4702796.00	1147.7	45.0	65	64.78	1.3	0.04	0.04	0.000	0.00	0.00	42.9
190	NAAQS&INC	NE5	DEFAULT	Siouxland Ethanol - Truck Loadout Flare	697598.00	4702959.00	1145.9	36.0	1800	21.73	2.5	0.00	0.00	0.000	1.71	2.36	42.8
191	NAAQS&INC	NE6	DEFAULT	Siouxland Ethanol - Methanator Flare	697657.00	4702895.00	1145.0	11.0	1800	33.68	1.4	0.00	0.00	0.000	1.04	2.38	42.8
192	NAAQS&INC	NE7	DEFAULT	DDGS Cooling Cyclone and Baghouse	697705.00	4702909.00	1139.9	45.0	65	66.02	45.0	0.06	0.06	0.000	0.00	0.00	42.8
193	NAAQS&INC	NE8	DEFAULT	Siouxland Ethanol - Cooling Tower	697544.00	4702933.00	1151.5	28.0	85	127.72	18.0	0.39	0.39	0.000	0.00	0.00	42.8
194	NAAQS&INC	NE9	DEFAULT	Siouxland Ethanol - Cooling Tower	697552.00	4702933.00	1150.8	28.0	85	127.72	18.0	0.39	0.39	0.000	0.00	0.00	42.8
195	NAAQS&INC	NE10	DEFAULT	Siouxland Ethanol - Cooling Tower	697559.00	4702939.00	1149.8	28.0	85	127.72	18.0	0.39	0.39	0.000	0.00	0.00	42.8
196	NAAQS&INC	NE11	DEFAULT	Siouxland Ethanol - Cooling Tower	697567.00	4702944.00	1148.9	28.0	85	127.72	18.0	0.39	0.39	0.000	0.00	0.00	42.8
197	NAAQS&INC	NE12	DEFAULT	Siouxland Ethanol - DDGS Loadout Baghouse	697722.00	4702924.00	1138.1	40.0	65	58.13	1.2	0.16	0.16	0.000	0.00	0.00	42.8
198	NAAQS&INC	NE13	DEFAULT	Siouxland Ethanol - Emergency Water Pump	697524.00	4702912.00	1155.0	8.0	770	590.78	0.3	0.08	0.08	0.400	3.44	0.18	42.8

Volume Sources

Model Source No.	Analysis	Source ID	Source Description	Easting (X)	Northing (Y)	Base Elevation (ft)	Release Height (ft)	Horizontal Dimension (ft)	Vertical Dimension (ft)	PMTEN (lb/hr)	PM25 (PMF) (lb/hr)	SO2 (lb/hr)	NOX (lb/hr)	CO (lb/hr)	Distance from Hyperion (km)
199	NAAQS&INC	SD4	Midwest Ready Mix	670876	4739676	1233.6	5	1.2	2.3	22.6	4.52	0.0	0.0	0.0	14.1
200	NAAQS&INC	SD5	Vermillion Fertilizer and Grain	666773	4739089	1141.1	5	1.2	2.3	22.6	4.52	0.0	0.0	0.0	18.2
201	NAAQS	SD6	Southeast Farmers Elevator Cooperative	689868	4728833	1124.5	5	1.2	2.3	22.6	4.52	0.0	0.0	0.0	15.8
202	NAAQS	SD7	Standard Ready Mix	670518	4739411	1230.6	5	1.2	2.3	22.6	4.52	0.0	0.0	0.0	14.5
203	NAAQS&INC	NE14	Tyson-Dakota City (IBP)	712732	4700538	1099.1	32.8	7.6	15.3	41.19	41.19	21.51	62.49	49.25	51.6

APPENDIX B
MODEL SUMMARY OUTPUT

9/26/07 Hyperion Final Permit Application AERMOD Summary Results

Model	File	Pol	Average	Group	Rank	Conc.	East(X)	North(Y)	Elev	Time	Met File	Sources	Groups	Rec.	
AERMOD	Hyperion_00_CO.USF	CO	1-HR	EMERG	1ST	213.0929	687242.7	4742526	368.28	22003	SIOUXF00.SFC	77	5	9678	
AERMOD	Hyperion_01_CO.USF	CO	1-HR	EMERG	1ST	234.6009	687239.3	4742662	370	1110219	SIOUXF01.SFC	77	5	9678	
AERMOD	Hyperion_02_CO.USF	CO	1-HR	EMERG	1ST	227.7341	687239.3	4742662	370	2122719	SIOUXF02.SFC	77	5	9678	
AERMOD	Hyperion_03_CO.USF	CO	1-HR	EMERG	1ST	200.8988	687243.9	4742481	368	3020705	SIOUXF03.SFC	77	5	9678	
AERMOD	Hyperion_04_CO.USF	CO	1-HR	EMERG	1ST	198.6047	687243.9	4742481	368	4122324	SIOUXF04.SFC	77	5	9678	
AERMOD	Hyperion_00_CO.USF	CO	1-HR	EMERG	2ND	209.5992	687242.7	4742526	368.28	40807	SIOUXF00.SFC	77	5	9678	
AERMOD	Hyperion_01_CO.USF	CO	1-HR	EMERG	2ND	188.2874	687240.4	4742617	369.23	1112105	SIOUXF01.SFC	77	5	9678	
AERMOD	Hyperion_02_CO.USF	CO	1-HR	EMERG	2ND	198.1219	687243.9	4742481	368	2082423	SIOUXF02.SFC	77	5	9678	
AERMOD	Hyperion_03_CO.USF	CO	1-HR	EMERG	2ND	189.555	687245.1	4742435.5	368	3112818	SIOUXF03.SFC	77	5	9678	
AERMOD	Hyperion_04_CO.USF	CO	1-HR	EMERG	2ND	179.8571	687243.9	4742481	368	4012022	SIOUXF04.SFC	77	5	9678	
AERMOD	Hyperion_00_CO.USF	CO	1-HR	INCRMT	1ST	788.1315	687700	4741500	367	80108	SIOUXF00.SFC	77	5	9678	
AERMOD	Hyperion_01_CO.USF	CO	1-HR	INCRMT	1ST	813.8851	687675	4741547	366.44	1110316	SIOUXF01.SFC	77	5	9678	
AERMOD	Hyperion_02_CO.USF	CO	1-HR	INCRMT	1ST	741.2431	687675	4741547	366.44	2081518	SIOUXF02.SFC	77	5	9678	
AERMOD	Hyperion_03_CO.USF	CO	1-HR	INCRMT	1ST	860.5303	687675	4741547	366.44	3101814	SIOUXF03.SFC	77	5	9678	
AERMOD	Hyperion_04_CO.USF	CO	1-HR	INCRMT	1ST	807.3553	687700	4741600	365	4110616	SIOUXF04.SFC	77	5	9678	
AERMOD	Hyperion_00_CO.USF	CO	1-HR	INCRMT	2ND	698.1694	687675	4741547	366.44	91910	SIOUXF00.SFC	77	5	9678	
AERMOD	Hyperion_01_CO.USF	CO	1-HR	INCRMT	2ND	711.8812	687800	4741500	367	1090708	SIOUXF01.SFC	77	5	9678	
AERMOD	Hyperion_02_CO.USF	CO	1-HR	INCRMT	2ND	710.5646	687676.2	4741497.5	367.09	2071007	SIOUXF02.SFC	77	5	9678	
AERMOD	Hyperion_03_CO.USF	CO	1-HR	INCRMT	2ND	761.2034	687700	4741500	367	3071507	SIOUXF03.SFC	77	5	9678	
AERMOD	Hyperion_04_CO.USF	CO	1-HR	INCRMT	2ND	754.8978	687800	4741600	366	4053019	SIOUXF04.SFC	77	5	9678	
AERMOD	Hyperion_00_CO.USF	CO	1-HR	NAAQS	1ST	788.144	687700	4741500	367	80108	SIOUXF00.SFC	77	5	9678	
AERMOD	Hyperion_01_CO.USF	CO	1-HR	NAAQS	1ST	813.9061	687675	4741547	366.44	1110316	SIOUXF01.SFC	77	5	9678	
AERMOD	Hyperion_02_CO.USF	CO	1-HR	NAAQS	1ST	741.2534	687675	4741547	366.44	2081518	SIOUXF02.SFC	77	5	9678	
AERMOD	Hyperion_03_CO.USF	CO	1-HR	NAAQS	1ST	860.5415	687675	4741547	366.44	3101814	SIOUXF03.SFC	77	5	9678	
AERMOD	Hyperion_04_CO.USF	CO	1-HR	NAAQS	1ST	807.356	687700	4741600	365	4110616	SIOUXF04.SFC	77	5	9678	
AERMOD	Hyperion_00_CO.USF	CO	1-HR	NAAQS	2ND	698.1787	687675	4741547	366.44	91910	SIOUXF00.SFC	77	5	9678	
AERMOD	Hyperion_01_CO.USF	CO	1-HR	NAAQS	2ND	711.8882	687800	4741500	367	1090708	SIOUXF01.SFC	77	5	9678	
AERMOD	Hyperion_02_CO.USF	CO	1-HR	NAAQS	2ND	710.568	687676.2	4741497.5	367.09	2071007	SIOUXF02.SFC	77	5	9678	
AERMOD	Hyperion_03_CO.USF	CO	1-HR	NAAQS	2ND	761.2092	687700	4741500	367	3071507	SIOUXF03.SFC	77	5	9678	
AERMOD	Hyperion_04_CO.USF	CO	1-HR	NAAQS	2ND	754.8987	687800	4741600	366	4053019	SIOUXF04.SFC	77	5	9678	
AERMOD	Hyperion_00_CO.USF	CO	1-HR	OFFSITE	1ST	122.5051	699000	4730000	363.67	80701	SIOUXF00.SFC	77	5	9678	
AERMOD	Hyperion_01_CO.USF	CO	1-HR	OFFSITE	1ST	62.78654	698000	4730000	341.33	1080608	SIOUXF01.SFC	77	5	9678	
AERMOD	Hyperion_02_CO.USF	CO	1-HR	OFFSITE	1ST	67.99663	696000	4730000	338	2071502	SIOUXF02.SFC	77	5	9678	
AERMOD	Hyperion_03_CO.USF	CO	1-HR	OFFSITE	1ST	68.26711	683000	4730000	344.73	3042208	SIOUXF03.SFC	77	5	9678	
AERMOD	Hyperion_04_CO.USF	CO	1-HR	OFFSITE	1ST	77.7147	699000	4739000	357.67	4010911	SIOUXF04.SFC	77	5	9678	
AERMOD	Hyperion_00_CO.USF	CO	1-HR	OFFSITE	2ND	61.71437	690000	4732000	340.77	41720	SIOUXF00.SFC	77	5	9678	
AERMOD	Hyperion_01_CO.USF	CO	1-HR	OFFSITE	2ND	61.55347	699000	4734000	424	1071704	SIOUXF01.SFC	77	5	9678	
AERMOD	Hyperion_02_CO.USF	CO	1-HR	OFFSITE	2ND	65.04697	697000	4730000	338.67	2071502	SIOUXF02.SFC	77	5	9678	
AERMOD	Hyperion_03_CO.USF	CO	1-HR	OFFSITE	2ND	56.01654	698000	4730000	341.33	3060321	SIOUXF03.SFC	77	5	9678	
AERMOD	Hyperion_04_CO.USF	CO	1-HR	OFFSITE	2ND	56.14856	699000	4735000	402.67	4010124	SIOUXF04.SFC	77	5	9678	
AERMOD	Hyperion_00_CO.USF	CO	1-HR	SIA	1ST	787.9254	687700	4741500	367	80108	SIOUXF00.SFC	77	5	9678	
AERMOD	Hyperion_01_CO.USF	CO	1-HR	SIA	1ST	813.6581	687675	4741547	366.44	1110316	SIOUXF01.SFC	77	5	9678	
AERMOD	Hyperion_02_CO.USF	CO	1-HR	SIA	1ST	741.1527	687675	4741547	366.44	2081518	SIOUXF02.SFC	77	5	9678	
AERMOD	Hyperion_03_CO.USF	CO	1-HR	SIA	1ST	860.4124	687675	4741547	366.44	3101814	SIOUXF03.SFC	77	5	9678	
AERMOD	Hyperion_04_CO.USF	CO	1-HR	SIA	1ST	807.184	687700	4741600	365	4110616	SIOUXF04.SFC	77	5	9678	
AERMOD	Hyperion_00_CO.USF	CO	1-HR	SIA	2ND	698.0607	687675	4741547	366.44	91910	SIOUXF00.SFC	77	5	9678	
AERMOD	Hyperion_01_CO.USF	CO	1-HR	SIA	2ND	711.7519	687800	4741500	367	1090708	SIOUXF01.SFC	77	5	9678	
AERMOD	Hyperion_02_CO.USF	CO	1-HR	SIA	2ND	710.5067	687676.2	4741497.5	367.09	2071007	SIOUXF02.SFC	77	5	9678	
AERMOD	Hyperion_03_CO.USF	CO	1-HR	SIA	2ND	761.1003	687700	4741500	367	3071507	SIOUXF03.SFC	77	5	9678	
AERMOD	Hyperion_04_CO.USF	CO	1-HR	SIA	2ND	754.737	687800	4741600	366	4053019	SIOUXF04.SFC	77	5	9678	
AERMOD	Hyperion_00_CO.USF	CO	8-HR	EMERG	1ST	128.9835	687242.7	4742526	368.28	11724	SIOUXF00.SFC	77	5	9678	
AERMOD	Hyperion_01_CO.USF	CO	8-HR	EMERG	1ST	140.4838	687243.9	4742481	368	1112024	SIOUXF01.SFC	77	5	9678	
AERMOD	Hyperion_02_CO.USF	CO	8-HR	EMERG	1ST	116.5587	684802.1	4741192	373	2012724	SIOUXF02.SFC	77	5	9678	

9/26/07 Hyperion Final Permit Application AERMOD Summary Results

Model	File	Pol	Average	Group	Rank	Conc.	East(X)	North(Y)	Elev	Time	Met File	Sources	Groups	Rec.	
AERMOD	Hyperion_03_CO.USF	CO	8-HR	EMERG	1ST	127.2395	684851.2	4741193	372.63	3121008	SIOUXF03.SFC	77	5	9678	
AERMOD	Hyperion_04_CO.USF	CO	8-HR	EMERG	1ST	118.5893	684802.1	4741192	373	4011808	SIOUXF04.SFC	77	5	9678	
AERMOD	Hyperion_00_CO.USF	CO	8-HR	EMERG	2ND	117.5172	687243.9	4742481	368	11724	SIOUXF00.SFC	77	5	9678	
AERMOD	Hyperion_01_CO.USF	CO	8-HR	EMERG	2ND	96.9383	687242.7	4742526	368.28	1040108	SIOUXF01.SFC	77	5	9678	
AERMOD	Hyperion_02_CO.USF	CO	8-HR	EMERG	2ND	105.2565	684851.2	4741193	372.63	2022008	SIOUXF02.SFC	77	5	9678	
AERMOD	Hyperion_03_CO.USF	CO	8-HR	EMERG	2ND	116.3857	684851.2	4741193	372.63	3012208	SIOUXF03.SFC	77	5	9678	
AERMOD	Hyperion_04_CO.USF	CO	8-HR	EMERG	2ND	89.71595	687245.1	4742435.5	368	4092408	SIOUXF04.SFC	77	5	9678	
AERMOD	Hyperion_00_CO.USF	CO	8-HR	INCRMT	1ST	417.5737	687290.5	4742435.5	368	82508	SIOUXF00.SFC	77	5	9678	
AERMOD	Hyperion_01_CO.USF	CO	8-HR	INCRMT	1ST	436.09	687290.5	4742435.5	368	1051508	SIOUXF01.SFC	77	5	9678	
AERMOD	Hyperion_02_CO.USF	CO	8-HR	INCRMT	1ST	385.2259	687241.6	4742571.5	369	2082908	SIOUXF02.SFC	77	5	9678	
AERMOD	Hyperion_03_CO.USF	CO	8-HR	INCRMT	1ST	447.9826	687676.2	4741497.5	367.09	3101816	SIOUXF03.SFC	77	5	9678	
AERMOD	Hyperion_04_CO.USF	CO	8-HR	INCRMT	1ST	459.4985	687675	4741547	366.44	4072216	SIOUXF04.SFC	77	5	9678	
AERMOD	Hyperion_00_CO.USF	CO	8-HR	INCRMT	2ND	406.9059	687336	4742435.5	368	82508	SIOUXF00.SFC	77	5	9678	
AERMOD	Hyperion_01_CO.USF	CO	8-HR	INCRMT	2ND	408.7186	687245.1	4742435.5	368	1051508	SIOUXF01.SFC	77	5	9678	
AERMOD	Hyperion_02_CO.USF	CO	8-HR	INCRMT	2ND	380.4674	687243.9	4742481	368	2082908	SIOUXF02.SFC	77	5	9678	
AERMOD	Hyperion_03_CO.USF	CO	8-HR	INCRMT	2ND	381.8859	687336	4742435.5	368	3100224	SIOUXF03.SFC	77	5	9678	
AERMOD	Hyperion_04_CO.USF	CO	8-HR	INCRMT	2ND	432.1119	687676.2	4741497.5	367.09	4072216	SIOUXF04.SFC	77	5	9678	
AERMOD	Hyperion_00_CO.USF	CO	8-HR	NAAQS	1ST	417.5737	687290.5	4742435.5	368	82508	SIOUXF00.SFC	77	5	9678	
AERMOD	Hyperion_01_CO.USF	CO	8-HR	NAAQS	1ST	436.09	687290.5	4742435.5	368	1051508	SIOUXF01.SFC	77	5	9678	
AERMOD	Hyperion_02_CO.USF	CO	8-HR	NAAQS	1ST	385.2259	687241.6	4742571.5	369	2082908	SIOUXF02.SFC	77	5	9678	
AERMOD	Hyperion_03_CO.USF	CO	8-HR	NAAQS	1ST	447.9943	687676.2	4741497.5	367.09	3101816	SIOUXF03.SFC	77	5	9678	
AERMOD	Hyperion_04_CO.USF	CO	8-HR	NAAQS	1ST	459.5052	687675	4741547	366.44	4072216	SIOUXF04.SFC	77	5	9678	
AERMOD	Hyperion_00_CO.USF	CO	8-HR	NAAQS	2ND	406.9059	687336	4742435.5	368	82508	SIOUXF00.SFC	77	5	9678	
AERMOD	Hyperion_01_CO.USF	CO	8-HR	NAAQS	2ND	408.7186	687245.1	4742435.5	368	1051508	SIOUXF01.SFC	77	5	9678	
AERMOD	Hyperion_02_CO.USF	CO	8-HR	NAAQS	2ND	380.4674	687243.9	4742481	368	2082908	SIOUXF02.SFC	77	5	9678	
AERMOD	Hyperion_03_CO.USF	CO	8-HR	NAAQS	2ND	381.8859	687336	4742435.5	368	3100224	SIOUXF03.SFC	77	5	9678	
AERMOD	Hyperion_04_CO.USF	CO	8-HR	NAAQS	2ND	432.1186	687676.2	4741497.5	367.09	4072216	SIOUXF04.SFC	77	5	9678	
AERMOD	Hyperion_00_CO.USF	CO	8-HR	OFFSITE	1ST	29.89979	699000	4730000	363.67	80708	SIOUXF00.SFC	77	5	9678	
AERMOD	Hyperion_01_CO.USF	CO	8-HR	OFFSITE	1ST	18.92152	699000	4734000	424	1071708	SIOUXF01.SFC	77	5	9678	
AERMOD	Hyperion_02_CO.USF	CO	8-HR	OFFSITE	1ST	21.68498	694000	4730000	338.57	2071508	SIOUXF02.SFC	77	5	9678	
AERMOD	Hyperion_03_CO.USF	CO	8-HR	OFFSITE	1ST	16.04604	699000	4735000	402.67	3121208	SIOUXF03.SFC	77	5	9678	
AERMOD	Hyperion_04_CO.USF	CO	8-HR	OFFSITE	1ST	17.04407	699000	4736000	384.33	4010916	SIOUXF04.SFC	77	5	9678	
AERMOD	Hyperion_00_CO.USF	CO	8-HR	OFFSITE	2ND	17.45749	699000	4730000	363.67	92724	SIOUXF00.SFC	77	5	9678	
AERMOD	Hyperion_01_CO.USF	CO	8-HR	OFFSITE	2ND	15.12576	699000	4737000	381	1112124	SIOUXF01.SFC	77	5	9678	
AERMOD	Hyperion_02_CO.USF	CO	8-HR	OFFSITE	2ND	14.2077	686000	4730000	343.2	2052908	SIOUXF02.SFC	77	5	9678	
AERMOD	Hyperion_03_CO.USF	CO	8-HR	OFFSITE	2ND	14.36003	699000	4734000	424	3081616	SIOUXF03.SFC	77	5	9678	
AERMOD	Hyperion_04_CO.USF	CO	8-HR	OFFSITE	2ND	15.55207	687000	4730000	342.9	4010108	SIOUXF04.SFC	77	5	9678	
AERMOD	Hyperion_00_CO.USF	CO	8-HR	SIA	1ST	417.5342	687290.5	4742435.5	368	82508	SIOUXF00.SFC	77	5	9678	
AERMOD	Hyperion_01_CO.USF	CO	8-HR	SIA	1ST	436.0461	687290.5	4742435.5	368	1051508	SIOUXF01.SFC	77	5	9678	
AERMOD	Hyperion_02_CO.USF	CO	8-HR	SIA	1ST	385.1515	687241.6	4742571.5	369	2082908	SIOUXF02.SFC	77	5	9678	
AERMOD	Hyperion_03_CO.USF	CO	8-HR	SIA	1ST	447.2848	687676.2	4741497.5	367.09	3101816	SIOUXF03.SFC	77	5	9678	
AERMOD	Hyperion_04_CO.USF	CO	8-HR	SIA	1ST	459.3606	687675	4741547	366.44	4072216	SIOUXF04.SFC	77	5	9678	
AERMOD	Hyperion_00_CO.USF	CO	8-HR	SIA	2ND	406.8663	687336	4742435.5	368	82508	SIOUXF00.SFC	77	5	9678	
AERMOD	Hyperion_01_CO.USF	CO	8-HR	SIA	2ND	408.6747	687245.1	4742435.5	368	1051508	SIOUXF01.SFC	77	5	9678	
AERMOD	Hyperion_02_CO.USF	CO	8-HR	SIA	2ND	380.3928	687243.9	4742481	368	2082908	SIOUXF02.SFC	77	5	9678	
AERMOD	Hyperion_03_CO.USF	CO	8-HR	SIA	2ND	381.8582	687336	4742435.5	368	3100224	SIOUXF03.SFC	77	5	9678	
AERMOD	Hyperion_04_CO.USF	CO	8-HR	SIA	2ND	431.974	687676.2	4741497.5	367.09	4072216	SIOUXF04.SFC	77	5	9678	
AERMOD	Hyperion_00_NH3.USF	NH3	ANNUAL	INCRMT	1ST	0.47766	686733.8	4743164	372	1 YRS	SIOUXF00.SFC	28	3	9678	
AERMOD	Hyperion_01_NH3.USF	NH3	ANNUAL	INCRMT	1ST	0.46547	686710.5	4743202.5	372	1 YRS	SIOUXF01.SFC	28	3	9678	
AERMOD	Hyperion_02_NH3.USF	NH3	ANNUAL	INCRMT	1ST	0.50995	686794.2	4742803	369.06	1 YRS	SIOUXF02.SFC	28	3	9678	
AERMOD	Hyperion_03_NH3.USF	NH3	ANNUAL	INCRMT	1ST	0.53457	686448.7	4743382.5	370.74	1 YRS	SIOUXF03.SFC	28	3	9678	
AERMOD	Hyperion_04_NH3.USF	NH3	ANNUAL	INCRMT	1ST	0.51221	686401.8	4743381	370.69	1 YRS	SIOUXF04.SFC	28	3	9678	
AERMOD	Hyperion_00_NH3.USF	NH3	ANNUAL	NAAQS	1ST	0.47766	686733.8	4743164	372	1 YRS	SIOUXF00.SFC	28	3	9678	

9/26/07 Hyperion Final Permit Application AERMOD Summary Results

Model	File	Pol	Average	Group	Rank	Conc.	East(X)	North(Y)	Elev	Time	Met File	Sources	Groups	Rec.
AERMOD	Hyperion_01_NH3.USF	NH3	ANNUAL	NAAQS	1ST	0.46547	686710.5	4743202.5	372	1 YRS	SIOUXF01.SFC	28	3	9678
AERMOD	Hyperion_02_NH3.USF	NH3	ANNUAL	NAAQS	1ST	0.50995	686794.2	4742803	369.06	1 YRS	SIOUXF02.SFC	28	3	9678
AERMOD	Hyperion_03_NH3.USF	NH3	ANNUAL	NAAQS	1ST	0.53457	686448.7	4743382.5	370.74	1 YRS	SIOUXF03.SFC	28	3	9678
AERMOD	Hyperion_04_NH3.USF	NH3	ANNUAL	NAAQS	1ST	0.51221	686401.8	4743381	370.69	1 YRS	SIOUXF04.SFC	28	3	9678
AERMOD	Hyperion_00_NH3.USF	NH3	ANNUAL	SIA	1ST	0.47766	686733.8	4743164	372	1 YRS	SIOUXF00.SFC	28	3	9678
AERMOD	Hyperion_01_NH3.USF	NH3	ANNUAL	SIA	1ST	0.46547	686710.5	4743202.5	372	1 YRS	SIOUXF01.SFC	28	3	9678
AERMOD	Hyperion_02_NH3.USF	NH3	ANNUAL	SIA	1ST	0.50995	686794.2	4742803	369.06	1 YRS	SIOUXF02.SFC	28	3	9678
AERMOD	Hyperion_03_NH3.USF	NH3	ANNUAL	SIA	1ST	0.53457	686448.7	4743382.5	370.74	1 YRS	SIOUXF03.SFC	28	3	9678
AERMOD	Hyperion_04_NH3.USF	NH3	ANNUAL	SIA	1ST	0.51221	686401.8	4743381	370.69	1 YRS	SIOUXF04.SFC	28	3	9678
AERMOD	Hyperion_00_PMF.USF	PMF	ANNUAL	EMERG	1ST	0.4241	687242.7	4742526	368.28	1 YRS	SIOUXF00.SFC	190	5	9678
AERMOD	Hyperion_01_PMF.USF	PMF	ANNUAL	EMERG	1ST	0.41366	687242.7	4742526	368.28	1 YRS	SIOUXF01.SFC	190	5	9678
AERMOD	Hyperion_02_PMF.USF	PMF	ANNUAL	EMERG	1ST	0.46911	687243.9	4742481	368	1 YRS	SIOUXF02.SFC	190	5	9678
AERMOD	Hyperion_03_PMF.USF	PMF	ANNUAL	EMERG	1ST	0.40416	684851.2	4741193	372.63	1 YRS	SIOUXF03.SFC	190	5	9678
AERMOD	Hyperion_04_PMF.USF	PMF	ANNUAL	EMERG	1ST	0.39996	687242.7	4742526	368.28	1 YRS	SIOUXF04.SFC	190	5	9678
AERMOD	Hyperion_00_PMF.USF	PMF	24-HR	EMERG	8TH	2.35175	684802.1	4741192	373	52724	SIOUXF00.SFC	190	5	9678
AERMOD	Hyperion_01_PMF.USF	PMF	24-HR	EMERG	8TH	2.2569	684900.4	4741194	372	1012624	SIOUXF01.SFC	190	5	9678
AERMOD	Hyperion_02_PMF.USF	PMF	24-HR	EMERG	8TH	2.63961	687242.7	4742526	368.28	2121424	SIOUXF02.SFC	190	5	9678
AERMOD	Hyperion_03_PMF.USF	PMF	24-HR	EMERG	8TH	2.38793	684851.2	4741193	372.63	3010524	SIOUXF03.SFC	190	5	9678
AERMOD	Hyperion_04_PMF.USF	PMF	24-HR	EMERG	8TH	2.32097	684949.5	4741195.5	371.9	4012624	SIOUXF04.SFC	190	5	9678
AERMOD	Hyperion_00_PMF.USF	PMF	ANNUAL	INCRMT	1ST	2.26666	686767.6	4741237.5	370.75	1 YRS	SIOUXF00.SFC	190	5	9678
AERMOD	Hyperion_01_PMF.USF	PMF	ANNUAL	INCRMT	1ST	2.29082	686718.5	4741236.5	371	1 YRS	SIOUXF01.SFC	190	5	9678
AERMOD	Hyperion_02_PMF.USF	PMF	ANNUAL	INCRMT	1ST	2.36819	686794.2	4742803	369.06	1 YRS	SIOUXF02.SFC	190	5	9678
AERMOD	Hyperion_03_PMF.USF	PMF	ANNUAL	INCRMT	1ST	2.3652	686794.2	4742803	369.06	1 YRS	SIOUXF03.SFC	190	5	9678
AERMOD	Hyperion_04_PMF.USF	PMF	ANNUAL	INCRMT	1ST	2.30141	686794.2	4742803	369.06	1 YRS	SIOUXF04.SFC	190	5	9678
AERMOD	Hyperion_00_PMF.USF	PMF	24-HR	INCRMT	8TH	9.04496	686000	4743000	370	82024	SIOUXF00.SFC	190	5	9678
AERMOD	Hyperion_01_PMF.USF	PMF	24-HR	INCRMT	8TH	9.48934	686077.2	4743123.5	371	1062824	SIOUXF01.SFC	190	5	9678
AERMOD	Hyperion_02_PMF.USF	PMF	24-HR	INCRMT	8TH	9.28284	686791.9	4742850	370	2062424	SIOUXF02.SFC	190	5	9678
AERMOD	Hyperion_03_PMF.USF	PMF	24-HR	INCRMT	8TH	9.48833	686710.5	4743202.5	372	3101024	SIOUXF03.SFC	190	5	9678
AERMOD	Hyperion_04_PMF.USF	PMF	24-HR	INCRMT	8TH	9.17428	686620.2	4741234	370.86	4050224	SIOUXF04.SFC	190	5	9678
AERMOD	Hyperion_00_PMF.USF	PMF	ANNUAL	NAAQS	1ST	2.27554	686767.6	4741237.5	370.75	1 YRS	SIOUXF00.SFC	190	5	9678
AERMOD	Hyperion_01_PMF.USF	PMF	ANNUAL	NAAQS	1ST	2.30388	686718.5	4741236.5	371	1 YRS	SIOUXF01.SFC	190	5	9678
AERMOD	Hyperion_02_PMF.USF	PMF	ANNUAL	NAAQS	1ST	2.38157	686794.2	4742803	369.06	1 YRS	SIOUXF02.SFC	190	5	9678
AERMOD	Hyperion_03_PMF.USF	PMF	ANNUAL	NAAQS	1ST	2.37788	686794.2	4742803	369.06	1 YRS	SIOUXF03.SFC	190	5	9678
AERMOD	Hyperion_04_PMF.USF	PMF	ANNUAL	NAAQS	1ST	2.31216	686794.2	4742803	369.06	1 YRS	SIOUXF04.SFC	190	5	9678
AERMOD	Hyperion_00_PMF.USF	PMF	24-HR	NAAQS	8TH	9.04661	686000	4743000	370	82024	SIOUXF00.SFC	190	5	9678
AERMOD	Hyperion_01_PMF.USF	PMF	24-HR	NAAQS	8TH	9.49375	686077.2	4743123.5	371	1062824	SIOUXF01.SFC	190	5	9678
AERMOD	Hyperion_02_PMF.USF	PMF	24-HR	NAAQS	8TH	9.2862	686794.2	4742803	369.06	2090624	SIOUXF02.SFC	190	5	9678
AERMOD	Hyperion_03_PMF.USF	PMF	24-HR	NAAQS	8TH	9.49347	686710.5	4743202.5	372	3101024	SIOUXF03.SFC	190	5	9678
AERMOD	Hyperion_04_PMF.USF	PMF	24-HR	NAAQS	8TH	9.17673	686620.2	4741234	370.86	4050224	SIOUXF04.SFC	190	5	9678
AERMOD	Hyperion_00_PMF.USF	PMF	ANNUAL	OFFSITE	1ST	0.28702	674000	4739000	377.22	1 YRS	SIOUXF00.SFC	190	5	9678
AERMOD	Hyperion_01_PMF.USF	PMF	ANNUAL	OFFSITE	1ST	0.42223	674000	4739000	377.22	1 YRS	SIOUXF01.SFC	190	5	9678
AERMOD	Hyperion_02_PMF.USF	PMF	ANNUAL	OFFSITE	1ST	0.28645	674000	4739000	377.22	1 YRS	SIOUXF02.SFC	190	5	9678
AERMOD	Hyperion_03_PMF.USF	PMF	ANNUAL	OFFSITE	1ST	0.27384	674000	4739000	377.22	1 YRS	SIOUXF03.SFC	190	5	9678
AERMOD	Hyperion_04_PMF.USF	PMF	ANNUAL	OFFSITE	1ST	0.28149	690000	4730000	341.99	1 YRS	SIOUXF04.SFC	190	5	9678
AERMOD	Hyperion_00_PMF.USF	PMF	24-HR	OFFSITE	8TH	1.94285	674000	4739000	377.22	40124	SIOUXF00.SFC	190	5	9678
AERMOD	Hyperion_01_PMF.USF	PMF	24-HR	OFFSITE	8TH	2.92637	674000	4739000	377.22	1081924	SIOUXF01.SFC	190	5	9678
AERMOD	Hyperion_02_PMF.USF	PMF	24-HR	OFFSITE	8TH	2.09904	674000	4739000	377.22	2012124	SIOUXF02.SFC	190	5	9678
AERMOD	Hyperion_03_PMF.USF	PMF	24-HR	OFFSITE	8TH	1.65264	674000	4739000	377.22	3011424	SIOUXF03.SFC	190	5	9678
AERMOD	Hyperion_04_PMF.USF	PMF	24-HR	OFFSITE	8TH	1.57215	674000	4739000	377.22	4122724	SIOUXF04.SFC	190	5	9678
AERMOD	Hyperion_00_PMF.USF	PMF	ANNUAL	SIA	1ST	2.16476	686767.6	4741237.5	370.75	1 YRS	SIOUXF00.SFC	190	5	9678
AERMOD	Hyperion_01_PMF.USF	PMF	ANNUAL	SIA	1ST	2.18549	686718.5	4741236.5	371	1 YRS	SIOUXF01.SFC	190	5	9678
AERMOD	Hyperion_02_PMF.USF	PMF	ANNUAL	SIA	1ST	2.26983	686794.2	4742803	369.06	1 YRS	SIOUXF02.SFC	190	5	9678
AERMOD	Hyperion_03_PMF.USF	PMF	ANNUAL	SIA	1ST	2.26252	686794.2	4742803	369.06	1 YRS	SIOUXF03.SFC	190	5	9678

9/26/07 Hyperion Final Permit Application AERMOD Summary Results

Model	File	Pol	Average	Group	Rank	Conc.	East(X)	North(Y)	Elev	Time	Met File	Sources	Groups	Rec.
AERMOD	Hyperion_04_PMF.USF	PMF	ANNUAL	SIA	1ST	2.18934	686794.2	4742803	369.06	1 YRS	SIOUXF04.SFC	190	5	9678
AERMOD	Hyperion_00_PMF.USF	PMF	24-HR	SIA	8TH	8.8768	686669.4	4741235.5	371	42024	SIOUXF00.SFC	190	5	9678
AERMOD	Hyperion_01_PMF.USF	PMF	24-HR	SIA	8TH	9.13354	686077.2	4743123.5	371	1090424	SIOUXF01.SFC	190	5	9678
AERMOD	Hyperion_02_PMF.USF	PMF	24-HR	SIA	8TH	9.07363	686892.3	4742802	370	2063024	SIOUXF02.SFC	190	5	9678
AERMOD	Hyperion_03_PMF.USF	PMF	24-HR	SIA	8TH	9.38627	686710.5	4743202.5	372	3101024	SIOUXF03.SFC	190	5	9678
AERMOD	Hyperion_04_PMF.USF	PMF	24-HR	SIA	8TH	9.14452	686620.2	4741234	370.86	4050224	SIOUXF04.SFC	190	5	9678
AERMOD	Hyperion_00_PMTEN.USF	PMTEN	24-HR	EMERG	1ST	3.79156	684900.4	4741194	372	122924	SIOUXF00.SFC	190	5	9678
AERMOD	Hyperion_01_PMTEN.USF	PMTEN	24-HR	EMERG	1ST	3.96699	687242.7	4742526	368.28	1011724	SIOUXF01.SFC	190	5	9678
AERMOD	Hyperion_02_PMTEN.USF	PMTEN	24-HR	EMERG	1ST	4.12357	684900.4	4741194	372	2022024	SIOUXF02.SFC	190	5	9678
AERMOD	Hyperion_03_PMTEN.USF	PMTEN	24-HR	EMERG	1ST	5.11757	684802.1	4741192	373	3120924	SIOUXF03.SFC	190	5	9678
AERMOD	Hyperion_04_PMTEN.USF	PMTEN	24-HR	EMERG	1ST	4.08076	684802.1	4741192	373	4011824	SIOUXF04.SFC	190	5	9678
AERMOD	Hyperion_00_PMTEN.USF	PMTEN	ANNUAL	EMERG	1ST	0.4241	687242.7	4742526	368.28	1 YRS	SIOUXF00.SFC	190	5	9678
AERMOD	Hyperion_01_PMTEN.USF	PMTEN	ANNUAL	EMERG	1ST	0.41366	687242.7	4742526	368.28	1 YRS	SIOUXF01.SFC	190	5	9678
AERMOD	Hyperion_02_PMTEN.USF	PMTEN	ANNUAL	EMERG	1ST	0.46911	687243.9	4742481	368	1 YRS	SIOUXF02.SFC	190	5	9678
AERMOD	Hyperion_03_PMTEN.USF	PMTEN	ANNUAL	EMERG	1ST	0.40416	684851.2	4741193	372.63	1 YRS	SIOUXF03.SFC	190	5	9678
AERMOD	Hyperion_04_PMTEN.USF	PMTEN	ANNUAL	EMERG	1ST	0.39996	687242.7	4742526	368.28	1 YRS	SIOUXF04.SFC	190	5	9678
AERMOD	Hyperion_00_PMTEN.USF	PMTEN	24-HR	EMERG	2ND	3.75568	684900.4	4741194	372	121824	SIOUXF00.SFC	190	5	9678
AERMOD	Hyperion_01_PMTEN.USF	PMTEN	24-HR	EMERG	2ND	3.11829	684851.2	4741193	372.63	1112724	SIOUXF01.SFC	190	5	9678
AERMOD	Hyperion_02_PMTEN.USF	PMTEN	24-HR	EMERG	2ND	3.48011	684851.2	4741193	372.63	2022024	SIOUXF02.SFC	190	5	9678
AERMOD	Hyperion_03_PMTEN.USF	PMTEN	24-HR	EMERG	2ND	3.67016	684752.9	4741190.5	373	3120924	SIOUXF03.SFC	190	5	9678
AERMOD	Hyperion_04_PMTEN.USF	PMTEN	24-HR	EMERG	2ND	3.43538	684802.1	4741192	373	4101324	SIOUXF04.SFC	190	5	9678
AERMOD	Hyperion_00_PMTEN.USF	PMTEN	24-HR	INCRMT	1ST	19.59899	699000	4730000	363.67	80724	SIOUXF00.SFC	190	5	9678
AERMOD	Hyperion_01_PMTEN.USF	PMTEN	24-HR	INCRMT	1ST	23.19538	674000	4739000	377.22	1110424	SIOUXF01.SFC	190	5	9678
AERMOD	Hyperion_02_PMTEN.USF	PMTEN	24-HR	INCRMT	1ST	12.73887	686669.4	4741235.5	371	2121224	SIOUXF02.SFC	190	5	9678
AERMOD	Hyperion_03_PMTEN.USF	PMTEN	24-HR	INCRMT	1ST	15.27232	686571.1	4741233	371	3012824	SIOUXF03.SFC	190	5	9678
AERMOD	Hyperion_04_PMTEN.USF	PMTEN	24-HR	INCRMT	1ST	13.87326	674000	4739000	377.22	4123124	SIOUXF04.SFC	190	5	9678
AERMOD	Hyperion_00_PMTEN.USF	PMTEN	ANNUAL	INCRMT	1ST	2.45723	687756.4	4740497.5	370	1 YRS	SIOUXF00.SFC	190	5	9678
AERMOD	Hyperion_01_PMTEN.USF	PMTEN	ANNUAL	INCRMT	1ST	2.58571	687756.4	4740497.5	370	1 YRS	SIOUXF01.SFC	190	5	9678
AERMOD	Hyperion_02_PMTEN.USF	PMTEN	ANNUAL	INCRMT	1ST	2.40678	686794.2	4742803	369.06	1 YRS	SIOUXF02.SFC	190	5	9678
AERMOD	Hyperion_03_PMTEN.USF	PMTEN	ANNUAL	INCRMT	1ST	2.39731	687756.4	4740497.5	370	1 YRS	SIOUXF03.SFC	190	5	9678
AERMOD	Hyperion_04_PMTEN.USF	PMTEN	ANNUAL	INCRMT	1ST	2.36348	687756.4	4740497.5	370	1 YRS	SIOUXF04.SFC	190	5	9678
AERMOD	Hyperion_00_PMTEN.USF	PMTEN	24-HR	INCRMT	2ND	11.50688	685900	4742800	369	102824	SIOUXF00.SFC	190	5	9678
AERMOD	Hyperion_01_PMTEN.USF	PMTEN	24-HR	INCRMT	2ND	14.37746	674000	4739000	377.22	1121924	SIOUXF01.SFC	190	5	9678
AERMOD	Hyperion_02_PMTEN.USF	PMTEN	24-HR	INCRMT	2ND	12.04715	686669.4	4741235.5	371	2062624	SIOUXF02.SFC	190	5	9678
AERMOD	Hyperion_03_PMTEN.USF	PMTEN	24-HR	INCRMT	2ND	14.21731	686571.1	4741233	371	3100124	SIOUXF03.SFC	190	5	9678
AERMOD	Hyperion_04_PMTEN.USF	PMTEN	24-HR	INCRMT	2ND	13.47058	674000	4739000	377.22	4020724	SIOUXF04.SFC	190	5	9678
AERMOD	Hyperion_00_PMTEN.USF	PMTEN	24-HR	NAAQS	1ST	22.72412	674000	4739000	377.22	122624	SIOUXF00.SFC	190	5	9678
AERMOD	Hyperion_01_PMTEN.USF	PMTEN	24-HR	NAAQS	1ST	32.45736	674000	4739000	377.22	1110424	SIOUXF01.SFC	190	5	9678
AERMOD	Hyperion_02_PMTEN.USF	PMTEN	24-HR	NAAQS	1ST	16.58252	674000	4739000	377.22	2122524	SIOUXF02.SFC	190	5	9678
AERMOD	Hyperion_03_PMTEN.USF	PMTEN	24-HR	NAAQS	1ST	19.2261	674000	4739000	377.22	3012124	SIOUXF03.SFC	190	5	9678
AERMOD	Hyperion_04_PMTEN.USF	PMTEN	24-HR	NAAQS	1ST	22.10051	674000	4740000	378	4122824	SIOUXF04.SFC	190	5	9678
AERMOD	Hyperion_00_PMTEN.USF	PMTEN	ANNUAL	NAAQS	1ST	2.4806	687756.4	4740497.5	370	1 YRS	SIOUXF00.SFC	190	5	9678
AERMOD	Hyperion_01_PMTEN.USF	PMTEN	ANNUAL	NAAQS	1ST	2.61747	687756.4	4740497.5	370	1 YRS	SIOUXF01.SFC	190	5	9678
AERMOD	Hyperion_02_PMTEN.USF	PMTEN	ANNUAL	NAAQS	1ST	2.43745	686794.2	4742803	369.06	1 YRS	SIOUXF02.SFC	190	5	9678
AERMOD	Hyperion_03_PMTEN.USF	PMTEN	ANNUAL	NAAQS	1ST	2.42673	687756.4	4740497.5	370	1 YRS	SIOUXF03.SFC	190	5	9678
AERMOD	Hyperion_04_PMTEN.USF	PMTEN	ANNUAL	NAAQS	1ST	2.38976	687756.4	4740497.5	370	1 YRS	SIOUXF04.SFC	190	5	9678
AERMOD	Hyperion_00_PMTEN.USF	PMTEN	24-HR	NAAQS	2ND	18.61748	674000	4739000	377.22	112324	SIOUXF00.SFC	190	5	9678
AERMOD	Hyperion_01_PMTEN.USF	PMTEN	24-HR	NAAQS	2ND	23.27149	674000	4739000	377.22	1100124	SIOUXF01.SFC	190	5	9678
AERMOD	Hyperion_02_PMTEN.USF	PMTEN	24-HR	NAAQS	2ND	14.09378	674000	4740000	378	2121424	SIOUXF02.SFC	190	5	9678
AERMOD	Hyperion_03_PMTEN.USF	PMTEN	24-HR	NAAQS	2ND	14.33752	686571.1	4741233	371	3100124	SIOUXF03.SFC	190	5	9678
AERMOD	Hyperion_04_PMTEN.USF	PMTEN	24-HR	NAAQS	2ND	15.11911	674000	4739000	377.22	4020724	SIOUXF04.SFC	190	5	9678
AERMOD	Hyperion_00_PMTEN.USF	PMTEN	24-HR	OFFSITE	1ST	22.72051	674000	4739000	377.22	122624	SIOUXF00.SFC	190	5	9678
AERMOD	Hyperion_01_PMTEN.USF	PMTEN	24-HR	OFFSITE	1ST	32.353	674000	4739000	377.22	1110424	SIOUXF01.SFC	190	5	9678

9/26/07 Hyperion Final Permit Application AERMOD Summary Results

Model	File	Pol	Average	Group	Rank	Conc.	East(X)	North(Y)	Elev	Time	Met File	Sources	Groups	Rec.	
AERMOD	Hyperion_02_PMTEN.USF	PMTEN	24-HR	OFFSITE	1ST	16.5764	674000	4739000	377.22	2122524	SIOUXF02.SFC	190	5	9678	
AERMOD	Hyperion_03_PMTEN.USF	PMTEN	24-HR	OFFSITE	1ST	19.22181	674000	4739000	377.22	3012124	SIOUXF03.SFC	190	5	9678	
AERMOD	Hyperion_04_PMTEN.USF	PMTEN	24-HR	OFFSITE	1ST	22.09438	674000	4740000	378	4122824	SIOUXF04.SFC	190	5	9678	
AERMOD	Hyperion_00_PMTEN.USF	PMTEN	ANNUAL	OFFSITE	1ST	0.96965	674000	4739000	377.22	1 YRS	SIOUXF00.SFC	190	5	9678	
AERMOD	Hyperion_01_PMTEN.USF	PMTEN	ANNUAL	OFFSITE	1ST	1.68529	674000	4739000	377.22	1 YRS	SIOUXF01.SFC	190	5	9678	
AERMOD	Hyperion_02_PMTEN.USF	PMTEN	ANNUAL	OFFSITE	1ST	1.07102	674000	4739000	377.22	1 YRS	SIOUXF02.SFC	190	5	9678	
AERMOD	Hyperion_03_PMTEN.USF	PMTEN	ANNUAL	OFFSITE	1ST	0.98699	674000	4739000	377.22	1 YRS	SIOUXF03.SFC	190	5	9678	
AERMOD	Hyperion_04_PMTEN.USF	PMTEN	ANNUAL	OFFSITE	1ST	0.9032	674000	4739000	377.22	1 YRS	SIOUXF04.SFC	190	5	9678	
AERMOD	Hyperion_00_PMTEN.USF	PMTEN	24-HR	OFFSITE	2ND	18.61488	674000	4739000	377.22	112324	SIOUXF00.SFC	190	5	9678	
AERMOD	Hyperion_01_PMTEN.USF	PMTEN	24-HR	OFFSITE	2ND	22.79302	674000	4739000	377.22	1100124	SIOUXF01.SFC	190	5	9678	
AERMOD	Hyperion_02_PMTEN.USF	PMTEN	24-HR	OFFSITE	2ND	14.08707	674000	4740000	378	2121424	SIOUXF02.SFC	190	5	9678	
AERMOD	Hyperion_03_PMTEN.USF	PMTEN	24-HR	OFFSITE	2ND	12.3241	674000	4739000	377.22	3080124	SIOUXF03.SFC	190	5	9678	
AERMOD	Hyperion_04_PMTEN.USF	PMTEN	24-HR	OFFSITE	2ND	15.11146	674000	4739000	377.22	4020724	SIOUXF04.SFC	190	5	9678	
AERMOD	Hyperion_00_PMTEN.USF	PMTEN	24-HR	SIA	1ST	13.06221	686079.3	4742976	370	81924	SIOUXF00.SFC	190	5	9678	
AERMOD	Hyperion_01_PMTEN.USF	PMTEN	24-HR	SIA	1ST	12.30756	686081.4	4742828	369.55	1021124	SIOUXF01.SFC	190	5	9678	
AERMOD	Hyperion_02_PMTEN.USF	PMTEN	24-HR	SIA	1ST	12.0434	686325.4	4741227.5	372	2032424	SIOUXF02.SFC	190	5	9678	
AERMOD	Hyperion_03_PMTEN.USF	PMTEN	24-HR	SIA	1ST	14.80343	686571.1	4741233	371	3012824	SIOUXF03.SFC	190	5	9678	
AERMOD	Hyperion_04_PMTEN.USF	PMTEN	24-HR	SIA	1ST	12.60312	686669.4	4741235.5	371	4071624	SIOUXF04.SFC	190	5	9678	
AERMOD	Hyperion_00_PMTEN.USF	PMTEN	ANNUAL	SIA	1ST	2.34045	687756.4	4740497.5	370	1 YRS	SIOUXF00.SFC	190	5	9678	
AERMOD	Hyperion_01_PMTEN.USF	PMTEN	ANNUAL	SIA	1ST	2.45751	687756.4	4740497.5	370	1 YRS	SIOUXF01.SFC	190	5	9678	
AERMOD	Hyperion_02_PMTEN.USF	PMTEN	ANNUAL	SIA	1ST	2.28581	686794.2	4742803	369.06	1 YRS	SIOUXF02.SFC	190	5	9678	
AERMOD	Hyperion_03_PMTEN.USF	PMTEN	ANNUAL	SIA	1ST	2.27679	686794.2	4742803	369.06	1 YRS	SIOUXF03.SFC	190	5	9678	
AERMOD	Hyperion_04_PMTEN.USF	PMTEN	ANNUAL	SIA	1ST	2.23507	687756.4	4740497.5	370	1 YRS	SIOUXF04.SFC	190	5	9678	
AERMOD	Hyperion_00_PMTEN.USF	PMTEN	24-HR	SIA	2ND	11.44921	685900	4742800	369	102824	SIOUXF00.SFC	190	5	9678	
AERMOD	Hyperion_01_PMTEN.USF	PMTEN	24-HR	SIA	2ND	11.5116	686816.8	4741238.5	370	1031624	SIOUXF01.SFC	190	5	9678	
AERMOD	Hyperion_02_PMTEN.USF	PMTEN	24-HR	SIA	2ND	11.99876	686669.4	4741235.5	371	2062624	SIOUXF02.SFC	190	5	9678	
AERMOD	Hyperion_03_PMTEN.USF	PMTEN	24-HR	SIA	2ND	13.57651	686571.1	4741233	371	3100124	SIOUXF03.SFC	190	5	9678	
AERMOD	Hyperion_04_PMTEN.USF	PMTEN	24-HR	SIA	2ND	12.13868	686669.4	4741235.5	371	4061824	SIOUXF04.SFC	190	5	9678	
AERMOD	Hyperion_00_SO2.USF	SO2	24-HR	EMERG	1ST	0.14142	684900.4	4741194	372	122924	SIOUXF00.SFC	70	5	9678	
AERMOD	Hyperion_01_SO2.USF	SO2	24-HR	EMERG	1ST	0.14969	687242.7	4742526	368.28	1011724	SIOUXF01.SFC	70	5	9678	
AERMOD	Hyperion_02_SO2.USF	SO2	24-HR	EMERG	1ST	0.1538	684900.4	4741194	372	2022024	SIOUXF02.SFC	70	5	9678	
AERMOD	Hyperion_03_SO2.USF	SO2	24-HR	EMERG	1ST	0.19088	684802.1	4741192	373	3120924	SIOUXF03.SFC	70	5	9678	
AERMOD	Hyperion_04_SO2.USF	SO2	24-HR	EMERG	1ST	0.15221	684802.1	4741192	373	4011824	SIOUXF04.SFC	70	5	9678	
AERMOD	Hyperion_00_SO2.USF	SO2	3-HR	EMERG	1ST	0.28862	687243.9	4742481	368	120603	SIOUXF00.SFC	70	5	9678	
AERMOD	Hyperion_01_SO2.USF	SO2	3-HR	EMERG	1ST	0.30231	687243.9	4742481	368	1081203	SIOUXF01.SFC	70	5	9678	
AERMOD	Hyperion_02_SO2.USF	SO2	3-HR	EMERG	1ST	0.33919	687243.9	4742481	368	2011103	SIOUXF02.SFC	70	5	9678	
AERMOD	Hyperion_03_SO2.USF	SO2	3-HR	EMERG	1ST	0.29868	687243.9	4742481	368	3020709	SIOUXF03.SFC	70	5	9678	
AERMOD	Hyperion_04_SO2.USF	SO2	3-HR	EMERG	1ST	0.309	687245.1	4742435.5	368	4053024	SIOUXF04.SFC	70	5	9678	
AERMOD	Hyperion_00_SO2.USF	SO2	ANNUAL	EMERG	1ST	0.016	687242.7	4742526	368.28	1 YRS	SIOUXF00.SFC	70	5	9678	
AERMOD	Hyperion_01_SO2.USF	SO2	ANNUAL	EMERG	1ST	0.01561	687242.7	4742526	368.28	1 YRS	SIOUXF01.SFC	70	5	9678	
AERMOD	Hyperion_02_SO2.USF	SO2	ANNUAL	EMERG	1ST	0.0177	687243.9	4742481	368	1 YRS	SIOUXF02.SFC	70	5	9678	
AERMOD	Hyperion_03_SO2.USF	SO2	ANNUAL	EMERG	1ST	0.0152	687242.7	4742526	368.28	1 YRS	SIOUXF03.SFC	70	5	9678	
AERMOD	Hyperion_04_SO2.USF	SO2	ANNUAL	EMERG	1ST	0.01509	687242.7	4742526	368.28	1 YRS	SIOUXF04.SFC	70	5	9678	
AERMOD	Hyperion_00_SO2.USF	SO2	24-HR	EMERG	2ND	0.14008	684900.4	4741194	372	121824	SIOUXF00.SFC	70	5	9678	
AERMOD	Hyperion_01_SO2.USF	SO2	24-HR	EMERG	2ND	0.11631	684851.2	4741193	372.63	1112724	SIOUXF01.SFC	70	5	9678	
AERMOD	Hyperion_02_SO2.USF	SO2	24-HR	EMERG	2ND	0.1298	684851.2	4741193	372.63	2022024	SIOUXF02.SFC	70	5	9678	
AERMOD	Hyperion_03_SO2.USF	SO2	24-HR	EMERG	2ND	0.13689	684752.9	4741190.5	373	3120924	SIOUXF03.SFC	70	5	9678	
AERMOD	Hyperion_04_SO2.USF	SO2	24-HR	EMERG	2ND	0.12813	684802.1	4741192	373	4101324	SIOUXF04.SFC	70	5	9678	
AERMOD	Hyperion_00_SO2.USF	SO2	3-HR	EMERG	2ND	0.27469	687243.9	4742481	368	11724	SIOUXF00.SFC	70	5	9678	
AERMOD	Hyperion_01_SO2.USF	SO2	3-HR	EMERG	2ND	0.27707	687243.9	4742481	368	1101824	SIOUXF01.SFC	70	5	9678	
AERMOD	Hyperion_02_SO2.USF	SO2	3-HR	EMERG	2ND	0.3152	687243.9	4742481	368	2101306	SIOUXF02.SFC	70	5	9678	
AERMOD	Hyperion_03_SO2.USF	SO2	3-HR	EMERG	2ND	0.29852	687243.9	4742481	368	3093003	SIOUXF03.SFC	70	5	9678	
AERMOD	Hyperion_04_SO2.USF	SO2	3-HR	EMERG	2ND	0.29536	687245.1	4742435.5	368	4010603	SIOUXF04.SFC	70	5	9678	

9/26/07 Hyperion Final Permit Application AERMOD Summary Results

Model	File	Pol	Average	Group	Rank	Conc.	East(X)	North(Y)	Elev	Time	Met File	Sources	Groups	Rec.
AERMOD	Hyperion_00_SO2.USF	SO2	24-HR	INCRMT	1ST	39.96132	686816.8	4741238.5	370	122924	SIOUXF00.SFC	70	5	9678
AERMOD	Hyperion_01_SO2.USF	SO2	24-HR	INCRMT	1ST	42.5046	686915.1	4741241	370	1121824	SIOUXF01.SFC	70	5	9678
AERMOD	Hyperion_02_SO2.USF	SO2	24-HR	INCRMT	1ST	44.00005	686865.9	4741240	370	2022024	SIOUXF02.SFC	70	5	9678
AERMOD	Hyperion_03_SO2.USF	SO2	24-HR	INCRMT	1ST	51.43616	686472.8	4741230.5	371	3022224	SIOUXF03.SFC	70	5	9678
AERMOD	Hyperion_04_SO2.USF	SO2	24-HR	INCRMT	1ST	43.6218	686571.1	4741233	371	4011824	SIOUXF04.SFC	70	5	9678
AERMOD	Hyperion_00_SO2.USF	SO2	3-HR	INCRMT	1ST	129.3743	686865.9	4741240	370	11924	SIOUXF00.SFC	70	5	9678
AERMOD	Hyperion_01_SO2.USF	SO2	3-HR	INCRMT	1ST	109.4907	686865.9	4741240	370	1121203	SIOUXF01.SFC	70	5	9678
AERMOD	Hyperion_02_SO2.USF	SO2	3-HR	INCRMT	1ST	110.0443	687240.4	4742617	369.23	2101306	SIOUXF02.SFC	70	5	9678
AERMOD	Hyperion_03_SO2.USF	SO2	3-HR	INCRMT	1ST	85.72733	686915.1	4741241	370	3102306	SIOUXF03.SFC	70	5	9678
AERMOD	Hyperion_04_SO2.USF	SO2	3-HR	INCRMT	1ST	110.5553	686865.9	4741240	370	4040606	SIOUXF04.SFC	70	5	9678
AERMOD	Hyperion_00_SO2.USF	SO2	ANNUAL	INCRMT	1ST	5.3136	686087.7	4742384.5	366	1 YRS	SIOUXF00.SFC	70	5	9678
AERMOD	Hyperion_01_SO2.USF	SO2	ANNUAL	INCRMT	1ST	5.06762	686767.6	4741237.5	370.75	1 YRS	SIOUXF01.SFC	70	5	9678
AERMOD	Hyperion_02_SO2.USF	SO2	ANNUAL	INCRMT	1ST	4.52854	686767.6	4741237.5	370.75	1 YRS	SIOUXF02.SFC	70	5	9678
AERMOD	Hyperion_03_SO2.USF	SO2	ANNUAL	INCRMT	1ST	4.95149	686718.5	4741236.5	371	1 YRS	SIOUXF03.SFC	70	5	9678
AERMOD	Hyperion_04_SO2.USF	SO2	ANNUAL	INCRMT	1ST	5.09108	686087.7	4742384.5	366	1 YRS	SIOUXF04.SFC	70	5	9678
AERMOD	Hyperion_00_SO2.USF	SO2	24-HR	INCRMT	2ND	34.91591	686865.9	4741240	370	121824	SIOUXF00.SFC	70	5	9678
AERMOD	Hyperion_01_SO2.USF	SO2	24-HR	INCRMT	2ND	33.90844	686865.9	4741240	370	1112724	SIOUXF01.SFC	70	5	9678
AERMOD	Hyperion_02_SO2.USF	SO2	24-HR	INCRMT	2ND	34.96649	686718.5	4741236.5	371	2030224	SIOUXF02.SFC	70	5	9678
AERMOD	Hyperion_03_SO2.USF	SO2	24-HR	INCRMT	2ND	40.44679	686521.9	4741232	371	3120924	SIOUXF03.SFC	70	5	9678
AERMOD	Hyperion_04_SO2.USF	SO2	24-HR	INCRMT	2ND	37.39866	686521.9	4741232	371	4051324	SIOUXF04.SFC	70	5	9678
AERMOD	Hyperion_00_SO2.USF	SO2	3-HR	INCRMT	2ND	107.1531	686865.9	4741240	370	50903	SIOUXF00.SFC	70	5	9678
AERMOD	Hyperion_01_SO2.USF	SO2	3-HR	INCRMT	2ND	104.3123	686915.1	4741241	370	1121203	SIOUXF01.SFC	70	5	9678
AERMOD	Hyperion_02_SO2.USF	SO2	3-HR	INCRMT	2ND	107.4362	687239.3	4742662	370	2101306	SIOUXF02.SFC	70	5	9678
AERMOD	Hyperion_03_SO2.USF	SO2	3-HR	INCRMT	2ND	84.0613	686865.9	4741240	370	3121106	SIOUXF03.SFC	70	5	9678
AERMOD	Hyperion_04_SO2.USF	SO2	3-HR	INCRMT	2ND	88.74768	686865.9	4741240	370	4081824	SIOUXF04.SFC	70	5	9678
AERMOD	Hyperion_00_SO2.USF	SO2	24-HR	NAAQS	1ST	39.96405	686816.8	4741238.5	370	122924	SIOUXF00.SFC	70	5	9678
AERMOD	Hyperion_01_SO2.USF	SO2	24-HR	NAAQS	1ST	42.50775	686915.1	4741241	370	1121824	SIOUXF01.SFC	70	5	9678
AERMOD	Hyperion_02_SO2.USF	SO2	24-HR	NAAQS	1ST	44.0025	686865.9	4741240	370	2022024	SIOUXF02.SFC	70	5	9678
AERMOD	Hyperion_03_SO2.USF	SO2	24-HR	NAAQS	1ST	51.43917	686472.8	4741230.5	371	3022224	SIOUXF03.SFC	70	5	9678
AERMOD	Hyperion_04_SO2.USF	SO2	24-HR	NAAQS	1ST	43.6248	686571.1	4741233	371	4011824	SIOUXF04.SFC	70	5	9678
AERMOD	Hyperion_00_SO2.USF	SO2	3-HR	NAAQS	1ST	129.3752	686865.9	4741240	370	11924	SIOUXF00.SFC	70	5	9678
AERMOD	Hyperion_01_SO2.USF	SO2	3-HR	NAAQS	1ST	109.5076	686865.9	4741240	370	1121203	SIOUXF01.SFC	70	5	9678
AERMOD	Hyperion_02_SO2.USF	SO2	3-HR	NAAQS	1ST	110.0465	687240.4	4742617	369.23	2101306	SIOUXF02.SFC	70	5	9678
AERMOD	Hyperion_03_SO2.USF	SO2	3-HR	NAAQS	1ST	85.72754	686915.1	4741241	370	3102306	SIOUXF03.SFC	70	5	9678
AERMOD	Hyperion_04_SO2.USF	SO2	3-HR	NAAQS	1ST	110.5555	686865.9	4741240	370	4040606	SIOUXF04.SFC	70	5	9678
AERMOD	Hyperion_00_SO2.USF	SO2	ANNUAL	NAAQS	1ST	5.36194	686087.7	4742384.5	366	1 YRS	SIOUXF00.SFC	70	5	9678
AERMOD	Hyperion_01_SO2.USF	SO2	ANNUAL	NAAQS	1ST	5.14796	686767.6	4741237.5	370.75	1 YRS	SIOUXF01.SFC	70	5	9678
AERMOD	Hyperion_02_SO2.USF	SO2	ANNUAL	NAAQS	1ST	4.60369	686767.6	4741237.5	370.75	1 YRS	SIOUXF02.SFC	70	5	9678
AERMOD	Hyperion_03_SO2.USF	SO2	ANNUAL	NAAQS	1ST	5.03525	686718.5	4741236.5	371	1 YRS	SIOUXF03.SFC	70	5	9678
AERMOD	Hyperion_04_SO2.USF	SO2	ANNUAL	NAAQS	1ST	5.16227	686087.7	4742384.5	366	1 YRS	SIOUXF04.SFC	70	5	9678
AERMOD	Hyperion_00_SO2.USF	SO2	24-HR	NAAQS	2ND	34.91783	686865.9	4741240	370	121824	SIOUXF00.SFC	70	5	9678
AERMOD	Hyperion_01_SO2.USF	SO2	24-HR	NAAQS	2ND	33.91064	686865.9	4741240	370	1112724	SIOUXF01.SFC	70	5	9678
AERMOD	Hyperion_02_SO2.USF	SO2	24-HR	NAAQS	2ND	35.03845	686718.5	4741236.5	371	2030224	SIOUXF02.SFC	70	5	9678
AERMOD	Hyperion_03_SO2.USF	SO2	24-HR	NAAQS	2ND	40.44916	686521.9	4741232	371	3120924	SIOUXF03.SFC	70	5	9678
AERMOD	Hyperion_04_SO2.USF	SO2	24-HR	NAAQS	2ND	37.40077	686521.9	4741232	371	4051324	SIOUXF04.SFC	70	5	9678
AERMOD	Hyperion_00_SO2.USF	SO2	3-HR	NAAQS	2ND	107.2117	686865.9	4741240	370	50903	SIOUXF00.SFC	70	5	9678
AERMOD	Hyperion_01_SO2.USF	SO2	3-HR	NAAQS	2ND	104.3282	686915.1	4741241	370	1121203	SIOUXF01.SFC	70	5	9678
AERMOD	Hyperion_02_SO2.USF	SO2	3-HR	NAAQS	2ND	107.4384	687239.3	4742662	370	2101306	SIOUXF02.SFC	70	5	9678
AERMOD	Hyperion_03_SO2.USF	SO2	3-HR	NAAQS	2ND	84.06331	686865.9	4741240	370	3121106	SIOUXF03.SFC	70	5	9678
AERMOD	Hyperion_04_SO2.USF	SO2	3-HR	NAAQS	2ND	88.75172	686865.9	4741240	370	4081824	SIOUXF04.SFC	70	5	9678
AERMOD	Hyperion_00_SO2.USF	SO2	24-HR	OFFSITE	1ST	7.92377	694000	4730000	338.57	50224	SIOUXF00.SFC	70	5	9678
AERMOD	Hyperion_01_SO2.USF	SO2	24-HR	OFFSITE	1ST	6.20708	699000	4734000	424	1071724	SIOUXF01.SFC	70	5	9678
AERMOD	Hyperion_02_SO2.USF	SO2	24-HR	OFFSITE	1ST	6.66575	695000	4730000	336.67	2071524	SIOUXF02.SFC	70	5	9678

9/26/07 Hyperion Final Permit Application AERMOD Summary Results

Model	File	Pol	Average	Group	Rank	Conc.	East(X)	North(Y)	Elev	Time	Met File	Sources	Groups	Rec.
AERMOD	Hyperion_03_SO2.USF	SO2	24-HR	OFFSITE	1ST	8.03668	699000	4734000	424	3121224	SIOUXF03.SFC	70	5	9678
AERMOD	Hyperion_04_SO2.USF	SO2	24-HR	OFFSITE	1ST	9.81218	699000	4730000	363.67	4101924	SIOUXF04.SFC	70	5	9678
AERMOD	Hyperion_00_SO2.USF	SO2	3-HR	OFFSITE	1ST	24.17637	699000	4745000	346	121312	SIOUXF00.SFC	70	5	9678
AERMOD	Hyperion_01_SO2.USF	SO2	3-HR	OFFSITE	1ST	22.42497	696000	4730000	338	1080609	SIOUXF01.SFC	70	5	9678
AERMOD	Hyperion_02_SO2.USF	SO2	3-HR	OFFSITE	1ST	29.02695	699000	4743000	348	2071803	SIOUXF02.SFC	70	5	9678
AERMOD	Hyperion_03_SO2.USF	SO2	3-HR	OFFSITE	1ST	26.03777	698000	4730000	341.33	3031309	SIOUXF03.SFC	70	5	9678
AERMOD	Hyperion_04_SO2.USF	SO2	3-HR	OFFSITE	1ST	31.58982	699000	4730000	363.67	4010912	SIOUXF04.SFC	70	5	9678
AERMOD	Hyperion_00_SO2.USF	SO2	ANNUAL	OFFSITE	1ST	0.70942	674000	4738000	363.78	1 YRS	SIOUXF00.SFC	70	5	9678
AERMOD	Hyperion_01_SO2.USF	SO2	ANNUAL	OFFSITE	1ST	0.73372	674000	4738000	363.78	1 YRS	SIOUXF01.SFC	70	5	9678
AERMOD	Hyperion_02_SO2.USF	SO2	ANNUAL	OFFSITE	1ST	0.66026	674000	4738000	363.78	1 YRS	SIOUXF02.SFC	70	5	9678
AERMOD	Hyperion_03_SO2.USF	SO2	ANNUAL	OFFSITE	1ST	0.813	699000	4730000	363.67	1 YRS	SIOUXF03.SFC	70	5	9678
AERMOD	Hyperion_04_SO2.USF	SO2	ANNUAL	OFFSITE	1ST	0.81495	699000	4730000	363.67	1 YRS	SIOUXF04.SFC	70	5	9678
AERMOD	Hyperion_00_SO2.USF	SO2	24-HR	OFFSITE	2ND	6.57715	699000	4730000	363.67	50224	SIOUXF00.SFC	70	5	9678
AERMOD	Hyperion_01_SO2.USF	SO2	24-HR	OFFSITE	2ND	5.63181	698000	4730000	341.33	1092524	SIOUXF01.SFC	70	5	9678
AERMOD	Hyperion_02_SO2.USF	SO2	24-HR	OFFSITE	2ND	6.3894	696000	4730000	338	2080924	SIOUXF02.SFC	70	5	9678
AERMOD	Hyperion_03_SO2.USF	SO2	24-HR	OFFSITE	2ND	5.98596	697000	4730000	338.67	3122524	SIOUXF03.SFC	70	5	9678
AERMOD	Hyperion_04_SO2.USF	SO2	24-HR	OFFSITE	2ND	7.26846	699000	4733000	390.33	4010924	SIOUXF04.SFC	70	5	9678
AERMOD	Hyperion_00_SO2.USF	SO2	3-HR	OFFSITE	2ND	20.21507	686000	4730000	343.2	22212	SIOUXF00.SFC	70	5	9678
AERMOD	Hyperion_01_SO2.USF	SO2	3-HR	OFFSITE	2ND	21.79854	694000	4730000	338.57	1112909	SIOUXF01.SFC	70	5	9678
AERMOD	Hyperion_02_SO2.USF	SO2	3-HR	OFFSITE	2ND	24.22247	687000	4730000	342.9	2052909	SIOUXF02.SFC	70	5	9678
AERMOD	Hyperion_03_SO2.USF	SO2	3-HR	OFFSITE	2ND	23.57711	697000	4730000	338.67	3062224	SIOUXF03.SFC	70	5	9678
AERMOD	Hyperion_04_SO2.USF	SO2	3-HR	OFFSITE	2ND	22.95992	683000	4730000	344.73	4080606	SIOUXF04.SFC	70	5	9678
AERMOD	Hyperion_00_SO2.USF	SO2	24-HR	SIA	1ST	39.91263	686816.8	4741238.5	370	122924	SIOUXF00.SFC	70	5	9678
AERMOD	Hyperion_01_SO2.USF	SO2	24-HR	SIA	1ST	42.46115	686915.1	4741241	370	1121824	SIOUXF01.SFC	70	5	9678
AERMOD	Hyperion_02_SO2.USF	SO2	24-HR	SIA	1ST	43.96606	686865.9	4741240	370	2022024	SIOUXF02.SFC	70	5	9678
AERMOD	Hyperion_03_SO2.USF	SO2	24-HR	SIA	1ST	51.38994	686472.8	4741230.5	371	3022224	SIOUXF03.SFC	70	5	9678
AERMOD	Hyperion_04_SO2.USF	SO2	24-HR	SIA	1ST	43.57932	686571.1	4741233	371	4011824	SIOUXF04.SFC	70	5	9678
AERMOD	Hyperion_00_SO2.USF	SO2	3-HR	SIA	1ST	129.3245	686865.9	4741240	370	11924	SIOUXF00.SFC	70	5	9678
AERMOD	Hyperion_01_SO2.USF	SO2	3-HR	SIA	1ST	109.4376	686865.9	4741240	370	1121203	SIOUXF01.SFC	70	5	9678
AERMOD	Hyperion_02_SO2.USF	SO2	3-HR	SIA	1ST	109.9927	687240.4	4742617	369.23	2101306	SIOUXF02.SFC	70	5	9678
AERMOD	Hyperion_03_SO2.USF	SO2	3-HR	SIA	1ST	85.69401	686915.1	4741241	370	3102306	SIOUXF03.SFC	70	5	9678
AERMOD	Hyperion_04_SO2.USF	SO2	3-HR	SIA	1ST	110.5225	686865.9	4741240	370	4040606	SIOUXF04.SFC	70	5	9678
AERMOD	Hyperion_00_SO2.USF	SO2	ANNUAL	SIA	1ST	4.87732	686087.7	4742384.5	366	1 YRS	SIOUXF00.SFC	70	5	9678
AERMOD	Hyperion_01_SO2.USF	SO2	ANNUAL	SIA	1ST	4.62586	686767.6	4741237.5	370.75	1 YRS	SIOUXF01.SFC	70	5	9678
AERMOD	Hyperion_02_SO2.USF	SO2	ANNUAL	SIA	1ST	4.11027	686767.6	4741237.5	370.75	1 YRS	SIOUXF02.SFC	70	5	9678
AERMOD	Hyperion_03_SO2.USF	SO2	ANNUAL	SIA	1ST	4.49404	686718.5	4741236.5	371	1 YRS	SIOUXF03.SFC	70	5	9678
AERMOD	Hyperion_04_SO2.USF	SO2	ANNUAL	SIA	1ST	4.59677	686087.7	4742384.5	366	1 YRS	SIOUXF04.SFC	70	5	9678
AERMOD	Hyperion_00_SO2.USF	SO2	24-HR	SIA	2ND	34.89322	686865.9	4741240	370	121824	SIOUXF00.SFC	70	5	9678
AERMOD	Hyperion_01_SO2.USF	SO2	24-HR	SIA	2ND	33.87878	686865.9	4741240	370	1112724	SIOUXF01.SFC	70	5	9678
AERMOD	Hyperion_02_SO2.USF	SO2	24-HR	SIA	2ND	34.9305	686718.5	4741236.5	371	2030224	SIOUXF02.SFC	70	5	9678
AERMOD	Hyperion_03_SO2.USF	SO2	24-HR	SIA	2ND	40.41791	686521.9	4741232	371	3120924	SIOUXF03.SFC	70	5	9678
AERMOD	Hyperion_04_SO2.USF	SO2	24-HR	SIA	2ND	37.36883	686521.9	4741232	371	4051324	SIOUXF04.SFC	70	5	9678
AERMOD	Hyperion_00_SO2.USF	SO2	3-HR	SIA	2ND	107.1035	686865.9	4741240	370	50903	SIOUXF00.SFC	70	5	9678
AERMOD	Hyperion_01_SO2.USF	SO2	3-HR	SIA	2ND	104.2593	686915.1	4741241	370	1121203	SIOUXF01.SFC	70	5	9678
AERMOD	Hyperion_02_SO2.USF	SO2	3-HR	SIA	2ND	107.3847	687239.3	4742662	370	2101306	SIOUXF02.SFC	70	5	9678
AERMOD	Hyperion_03_SO2.USF	SO2	3-HR	SIA	2ND	84.0183	686865.9	4741240	370	3121106	SIOUXF03.SFC	70	5	9678
AERMOD	Hyperion_04_SO2.USF	SO2	3-HR	SIA	2ND	88.68152	686865.9	4741240	370	4081824	SIOUXF04.SFC	70	5	9678
AERMOD	Hyperion_00_NH3.USF	NH3	ANNUAL	INCRMT	1ST	0.47766	686733.8	4743164	372	1 YRS	SIOUXF00.SFC	28	3	9678
AERMOD	Hyperion_01_NH3.USF	NH3	ANNUAL	INCRMT	1ST	0.46547	686710.5	4743202.5	372	1 YRS	SIOUXF01.SFC	28	3	9678
AERMOD	Hyperion_02_NH3.USF	NH3	ANNUAL	INCRMT	1ST	0.50995	686794.2	4742803	369.06	1 YRS	SIOUXF02.SFC	28	3	9678
AERMOD	Hyperion_03_NH3.USF	NH3	ANNUAL	INCRMT	1ST	0.53457	686448.7	4743382.5	370.74	1 YRS	SIOUXF03.SFC	28	3	9678
AERMOD	Hyperion_04_NH3.USF	NH3	ANNUAL	INCRMT	1ST	0.51221	686401.8	4743381	370.69	1 YRS	SIOUXF04.SFC	28	3	9678
AERMOD	Hyperion_00_NH3.USF	NH3	ANNUAL	NAAQS	1ST	0.47766	686733.8	4743164	372	1 YRS	SIOUXF00.SFC	28	3	9678

9/26/07 Hyperion Final Permit Application AERMOD Summary Results

Model	File	Pol	Average	Group	Rank	Conc.	East(X)	North(Y)	Elev	Time	Met File	Sources	Groups	Rec.
AERMOD	Hyperion_01_NH3.USF	NH3	ANNUAL	NAAQS	1ST	0.46547	686710.5	4743202.5	372	1 YRS	SIOUXF01.SFC	28	3	9678
AERMOD	Hyperion_02_NH3.USF	NH3	ANNUAL	NAAQS	1ST	0.50995	686794.2	4742803	369.06	1 YRS	SIOUXF02.SFC	28	3	9678
AERMOD	Hyperion_03_NH3.USF	NH3	ANNUAL	NAAQS	1ST	0.53457	686448.7	4743382.5	370.74	1 YRS	SIOUXF03.SFC	28	3	9678
AERMOD	Hyperion_04_NH3.USF	NH3	ANNUAL	NAAQS	1ST	0.51221	686401.8	4743381	370.69	1 YRS	SIOUXF04.SFC	28	3	9678
AERMOD	Hyperion_00_NH3.USF	NH3	ANNUAL	SIA	1ST	0.47766	686733.8	4743164	372	1 YRS	SIOUXF00.SFC	28	3	9678
AERMOD	Hyperion_01_NH3.USF	NH3	ANNUAL	SIA	1ST	0.46547	686710.5	4743202.5	372	1 YRS	SIOUXF01.SFC	28	3	9678
AERMOD	Hyperion_02_NH3.USF	NH3	ANNUAL	SIA	1ST	0.50995	686794.2	4742803	369.06	1 YRS	SIOUXF02.SFC	28	3	9678
AERMOD	Hyperion_03_NH3.USF	NH3	ANNUAL	SIA	1ST	0.53457	686448.7	4743382.5	370.74	1 YRS	SIOUXF03.SFC	28	3	9678
AERMOD	Hyperion_04_NH3.USF	NH3	ANNUAL	SIA	1ST	0.51221	686401.8	4743381	370.69	1 YRS	SIOUXF04.SFC	28	3	9678
AERMOD	Hyperion_00_NOX.USF	NOX	ANNUAL	EMERG	1ST	0.10563	687242.7	4742526	368.28	1 YRS	SIOUXF00.SFC	84	5	9678
AERMOD	Hyperion_01_NOX.USF	NOX	ANNUAL	EMERG	1ST	0.10304	687242.7	4742526	368.28	1 YRS	SIOUXF01.SFC	84	5	9678
AERMOD	Hyperion_02_NOX.USF	NOX	ANNUAL	EMERG	1ST	0.11685	687243.9	4742481	368	1 YRS	SIOUXF02.SFC	84	5	9678
AERMOD	Hyperion_03_NOX.USF	NOX	ANNUAL	EMERG	1ST	0.10104	684851.2	4741193	372.63	1 YRS	SIOUXF03.SFC	84	5	9678
AERMOD	Hyperion_04_NOX.USF	NOX	ANNUAL	EMERG	1ST	0.09962	687242.7	4742526	368.28	1 YRS	SIOUXF04.SFC	84	5	9678
AERMOD	Hyperion_00_NOX.USF	NOX	ANNUAL	INCRMT	1ST	2.90486	686782.6	4743039	371	1 YRS	SIOUXF00.SFC	84	5	9678
AERMOD	Hyperion_01_NOX.USF	NOX	ANNUAL	INCRMT	1ST	3.01924	686782.6	4743039	371	1 YRS	SIOUXF01.SFC	84	5	9678
AERMOD	Hyperion_02_NOX.USF	NOX	ANNUAL	INCRMT	1ST	3.14078	686782.6	4743039	371	1 YRS	SIOUXF02.SFC	84	5	9678
AERMOD	Hyperion_03_NOX.USF	NOX	ANNUAL	INCRMT	1ST	3.24269	686757	4743125	372	1 YRS	SIOUXF03.SFC	84	5	9678
AERMOD	Hyperion_04_NOX.USF	NOX	ANNUAL	INCRMT	1ST	3.10721	686757	4743125	372	1 YRS	SIOUXF04.SFC	84	5	9678
AERMOD	Hyperion_00_NOX.USF	NOX	ANNUAL	NAAQS	1ST	3.00786	686782.6	4743039	371	1 YRS	SIOUXF00.SFC	84	5	9678
AERMOD	Hyperion_01_NOX.USF	NOX	ANNUAL	NAAQS	1ST	3.19866	686782.6	4743039	371	1 YRS	SIOUXF01.SFC	84	5	9678
AERMOD	Hyperion_02_NOX.USF	NOX	ANNUAL	NAAQS	1ST	3.33199	686782.6	4743039	371	1 YRS	SIOUXF02.SFC	84	5	9678
AERMOD	Hyperion_03_NOX.USF	NOX	ANNUAL	NAAQS	1ST	3.4337	686757	4743125	372	1 YRS	SIOUXF03.SFC	84	5	9678
AERMOD	Hyperion_04_NOX.USF	NOX	ANNUAL	NAAQS	1ST	3.26309	686757	4743125	372	1 YRS	SIOUXF04.SFC	84	5	9678
AERMOD	Hyperion_00_NOX.USF	NOX	ANNUAL	OFFSITE	1ST	0.64602	674000	4743000	373	1 YRS	SIOUXF00.SFC	84	5	9678
AERMOD	Hyperion_01_NOX.USF	NOX	ANNUAL	OFFSITE	1ST	0.74961	674000	4744000	370	1 YRS	SIOUXF01.SFC	84	5	9678
AERMOD	Hyperion_02_NOX.USF	NOX	ANNUAL	OFFSITE	1ST	0.59609	674000	4743000	373	1 YRS	SIOUXF02.SFC	84	5	9678
AERMOD	Hyperion_03_NOX.USF	NOX	ANNUAL	OFFSITE	1ST	0.61992	674000	4738000	363.78	1 YRS	SIOUXF03.SFC	84	5	9678
AERMOD	Hyperion_04_NOX.USF	NOX	ANNUAL	OFFSITE	1ST	0.62784	674000	4738000	363.78	1 YRS	SIOUXF04.SFC	84	5	9678
AERMOD	Hyperion_00_NOX.USF	NOX	ANNUAL	SIA	1ST	2.6245	686782.6	4743039	371	1 YRS	SIOUXF00.SFC	84	5	9678
AERMOD	Hyperion_01_NOX.USF	NOX	ANNUAL	SIA	1ST	2.63484	686782.6	4743039	371	1 YRS	SIOUXF01.SFC	84	5	9678
AERMOD	Hyperion_02_NOX.USF	NOX	ANNUAL	SIA	1ST	2.83962	686782.6	4743039	371	1 YRS	SIOUXF02.SFC	84	5	9678
AERMOD	Hyperion_03_NOX.USF	NOX	ANNUAL	SIA	1ST	2.93892	686757	4743125	372	1 YRS	SIOUXF03.SFC	84	5	9678
AERMOD	Hyperion_04_NOX.USF	NOX	ANNUAL	SIA	1ST	2.79121	686757	4743125	372	1 YRS	SIOUXF04.SFC	84	5	9678

9/26/07 Hyperion Final Permit Application AERMOD Summary Results

Model	File	Pol	Average	Group	Rank	Conc.	East(X)	North(Y)	Elev	Time	Met File	Sources	Groups	Rec.

AERMOD 5-Yr Summary

Pollutant	Average	Group	Rank	Conc.	Bckgnd	Total	Standard	%Standard	Analysis	Distance to Sign. (km)	Comments
PMTEN	24-HR	SIA	1ST	14.80	NA	14.8	5	296%	Significance		
PMTEN	ANNUAL	SIA	1ST	2.46	NA	2.5	1	246%	Significance		
PMTEN	24-HR	NAAQS	2ND	23.27	49	72	150	48%	NAAQS		
PMTEN	ANNUAL	NAAQS	1ST	2.62	19	22	50	43%	NAAQS		
PMTEN	24-HR	INCRMT	2ND	14.38	NA	14	30	48%	Increment		
PMTEN	ANNUAL	INCRMT	1ST	2.59	NA	2.59	17	15%	Increment		
PMF	24-HR	NAAQS	8TH	9.49	23	32.49	35	93%	NAAQS	NA	
PMF	ANNUAL	NAAQS	1ST	2.38	9	11.38	15	76%	NAAQS	NA	
SO2	3-HR	SIA	1ST	129.32	NA	129.3	25	517%	Significance		
SO2	24-HR	SIA	1ST	51.39	NA	51.4	5	1028%	Significance		
SO2	ANNUAL	SIA	1ST	4.88	NA	4.9	1	488%	Significance		
SO2	3-HR	NAAQS	2ND	107.44	21	128.4	1300	10%	NAAQS		
SO2	24-HR	NAAQS	2ND	40.45	5	45.4	365	12%	NAAQS		
SO2	ANNUAL	NAAQS	1ST	5.36	3	8.4	80	10%	NAAQS		
SO2	3-HR	INCRMT	2ND	107.44	NA	107.4	512	21%	Increment		
SO2	24-HR	INCRMT	2ND	40.45	NA	40.4	91	44%	Increment		
SO2	ANNUAL	INCRMT	1ST	5.31	NA	5.3	20	27%	Increment		
NOX	ANNUAL	SIA	1ST	2.94	NA	2.9	1	294%	Significance		
NOX	ANNUAL	NAAQS	1ST	3.43	10	13.4	100	13%	NAAQS		
NOX	ANNUAL	INCRMT	2ND	3.24	NA	3.2	25	13%	Increment		
CO	1-HR	SIA	1ST	860.4	NA	860.4	2000	43%	Significance	NA	
CO	8-HR	SIA	1ST	459.4	NA	459.4	500	92%	Significance	NA	

PMF=PM Fine (PM2.5)

Visual Effects Screening Analysis for
Source: Hyperion
Class I Area: Homestead

*** Level-1 Screening ***

Input Emissions for

Particulates	237.00	LB /HR
NOx (as NO2)	278.00	LB /HR
Primary NO2	.00	LB /HR
Soot	.00	LB /HR
Primary SO4	.00	LB /HR

**** Default Particle Characteristics Assumed

Transport Scenario Specifications:

Background Ozone:	.04 ppm
Background Visual Range:	59.80 km
Source-Observer Distance:	167.00 km
Min. Source-Class I Distance:	167.00 km
Max. Source-Class I Distance:	169.00 km
Plume-Source-Observer Angle:	11.25 degrees
Stability:	6
Wind Speed:	1.00 m/s

R E S U L T S

Asterisks (*) indicate plume impacts that exceed screening criteria

Maximum Visual Impacts INSIDE Class I Area
Screening Criteria ARE NOT Exceeded

					Delta E		Contrast	
Backgrnd	Theta	Azi	Distance	Alpha	Crit	Plume	Crit	Plume
SKY	10.	84.	167.0	84.	2.00	.317	.05	.003
SKY	140.	84.	167.0	84.	2.00	.056	.05	-.003
TERRAIN	10.	84.	167.0	84.	2.00	.056	.05	.001
TERRAIN	140.	84.	167.0	84.	2.00	.015	.05	.000

Maximum Visual Impacts OUTSIDE Class I Area
Screening Criteria ARE NOT Exceeded

					Delta E		Contrast	
Backgrnd	Theta	Azi	Distance	Alpha	Crit	Plume	Crit	Plume
SKY	10.	65.	155.8	104.	2.00	.335	.05	.003
SKY	140.	65.	155.8	104.	2.00	.059	.05	-.003
TERRAIN	10.	60.	152.7	109.	2.00	.074	.05	.001
TERRAIN	140.	60.	152.7	109.	2.00	.020	.05	.001

Visual Effects Screening Analysis for
Source: Hyperion
Class I Area: Lewis & Clark

*** Level-1 Screening ***

Input Emissions for

Particulates	237.00	LB /HR
NOx (as NO2)	278.00	LB /HR
Primary NO2	.00	LB /HR
Soot	.00	LB /HR
Primary SO4	.00	LB /HR

**** Default Particle Characteristics Assumed

Transport Scenario Specifications:

Background Ozone:	.04 ppm
Background Visual Range:	59.80 km
Source-Observer Distance:	106.00 km
Min. Source-Class I Distance:	106.00 km
Max. Source-Class I Distance:	108.00 km
Plume-Source-Observer Angle:	11.25 degrees
Stability:	6
Wind Speed:	1.00 m/s

R E S U L T S

Asterisks (*) indicate plume impacts that exceed screening criteria

Maximum Visual Impacts INSIDE Class I Area
Screening Criteria ARE NOT Exceeded

Backgrnd	Theta	Azi	Distance	Alpha	Delta E Crit	Delta E Plume	Contrast Crit	Contrast Plume
SKY	10.	84.	106.0	84.	2.00	1.067	.05	.012
SKY	140.	84.	106.0	84.	2.00	.220	.05	-.010
TERRAIN	10.	84.	106.0	84.	2.00	.422	.05	.005
TERRAIN	140.	84.	106.0	84.	2.00	.092	.05	.003

Maximum Visual Impacts OUTSIDE Class I Area
Screening Criteria ARE NOT Exceeded

Backgrnd	Theta	Azi	Distance	Alpha	Delta E Crit	Delta E Plume	Contrast Crit	Contrast Plume
SKY	10.	40.	87.4	129.	2.00	1.206	.05	.013
SKY	140.	40.	87.4	129.	2.00	.221	.05	-.010
TERRAIN	10.	50.	92.6	119.	2.00	.534	.05	.006
TERRAIN	140.	50.	92.6	119.	2.00	.125	.05	.004

Visual Effects Screening Analysis for
Source: Hyperion
Class I Area: Niobrara

*** Level-1 Screening ***

Input Emissions for

Particulates	237.00	LB /HR
NOx (as NO2)	278.00	LB /HR
Primary NO2	.00	LB /HR
Soot	.00	LB /HR
Primary SO4	.00	LB /HR

**** Default Particle Characteristics Assumed

Transport Scenario Specifications:

Background Ozone: .04 ppm
Background Visual Range: 59.80 km
Source-Observer Distance: 101.00 km
Min. Source-Class I Distance: 101.00 km
Max. Source-Class I Distance: 103.00 km
Plume-Source-Observer Angle: 11.25 degrees
Stability: 6
Wind Speed: 1.00 m/s

R E S U L T S

Asterisks (*) indicate plume impacts that exceed screening criteria

Maximum Visual Impacts INSIDE Class I Area
Screening Criteria ARE NOT Exceeded

Backgrnd	Theta	Azi	Distance	Alpha	Delta E Crit	Delta E Plume	Contrast Crit	Contrast Plume
SKY	10.	84.	101.0	84.	2.00	1.193	.05	.013
SKY	140.	84.	101.0	84.	2.00	.252	.05	-.011
TERRAIN	10.	84.	101.0	84.	2.00	.507	.05	.005
TERRAIN	140.	84.	101.0	84.	2.00	.108	.05	.004

Maximum Visual Impacts OUTSIDE Class I Area
Screening Criteria ARE NOT Exceeded

Backgrnd	Theta	Azi	Distance	Alpha	Delta E Crit	Delta E Plume	Contrast Crit	Contrast Plume
SKY	10.	40.	83.2	129.	2.00	1.371	.05	.015
SKY	140.	40.	83.2	129.	2.00	.256	.05	-.012
TERRAIN	10.	50.	88.2	119.	2.00	.641	.05	.007
TERRAIN	140.	50.	88.2	119.	2.00	.146	.05	.005

Visual Effects Screening Analysis for
Source: Hyperion
Class I Area: Pipestone

```
                ***   Level-1 Screening   ***
Input Emissions for

   Particulates   237.00  LB /HR
   NOx (as NO2)   278.00  LB /HR
   Primary NO2       .00  LB /HR
   Soot              .00  LB /HR
   Primary SO4       .00  LB /HR


    **** Default Particle Characteristics Assumed

              Transport Scenario Specifications:

    Background Ozone:                  .04 ppm
    Background Visual Range:         59.80 km
    Source-Observer Distance:        92.00 km
    Min. Source-Class I Distance:    92.00 km
    Max. Source-Class I Distance:    94.00 km
    Plume-Source-Observer Angle:     11.25 degrees
    Stability:   6
    Wind Speed:   1.00 m/s

                           R E S U L T S

Asterisks (*) indicate plume impacts that exceed screening criteria

         Maximum Visual Impacts INSIDE  Class I Area
          Screening Criteria ARE NOT Exceeded
                                     Delta E       Contrast
                                  ===========   ============
Backgrnd Theta Azi Distance Alpha Crit  Plume   Crit  Plume
======== ===== === ======== ===== ====  =====   ====  =====
 SKY      10.  84.   92.0    84.  2.00  1.469    .05   .017
 SKY     140.  84.   92.0    84.  2.00   .328    .05  -.013
 TERRAIN  10.  84.   92.0    84.  2.00   .711    .05   .008
 TERRAIN 140.  84.   92.0    84.  2.00   .145    .05   .005


         Maximum Visual Impacts OUTSIDE Class I Area
          Screening Criteria ARE NOT Exceeded
                                     Delta E       Contrast
                                  ===========   ============
Backgrnd Theta Azi Distance Alpha Crit  Plume   Crit  Plume
======== ===== === ======== ===== ====  =====   ====  =====
 SKY      10.  35.   73.1   134.  2.00  1.751    .05   .019
 SKY     140.  35.   73.1   134.  2.00   .328    .05  -.015
 TERRAIN  10.  50.   80.4   119.  2.00   .899    .05   .010
 TERRAIN 140.  50.   80.4   119.  2.00   .197    .05   .007

              Visual Effects Screening Analysis for
                Source: Hyperion
                Class I Area: Missouri


                ***   Level-1 Screening   ***
Input Emissions for

   Particulates   237.00  LB /HR
   NOx (as NO2)   278.00  LB /HR
   Primary NO2       .00  LB /HR
   Soot              .00  LB /HR
   Primary SO4       .00  LB /HR


    **** Default Particle Characteristics Assumed

              Transport Scenario Specifications:

    Background Ozone:                  .04 ppm
    Background Visual Range:         59.80 km
    Source-Observer Distance:        13.00 km
    Min. Source-Class I Distance:    13.00 km
    Max. Source-Class I Distance:    15.00 km
    Plume-Source-Observer Angle:     11.25 degrees
    Stability:   6
    Wind Speed:   1.00 m/s

                           R E S U L T S

Asterisks (*) indicate plume impacts that exceed screening criteria

         Maximum Visual Impacts INSIDE  Class I Area
            Screening Criteria ARE Exceeded
```

					Delta E		Contrast	
Backgrnd	Theta	Azi	Distance	Alpha	Crit	Plume	Crit	Plume
SKY	10.	120.	15.0	48.	2.00	13.301*	.05	.178*
SKY	140.	120.	15.0	48.	2.00	5.898*	.05	-.144*
TERRAIN	10.	84.	13.0	84.	2.00	28.431*	.05	.245*
TERRAIN	140.	84.	13.0	84.	2.00	4.316*	.05	.096*

Maximum Visual Impacts OUTSIDE Class I Area
Screening Criteria ARE Exceeded

					Delta E		Contrast	
Backgrnd	Theta	Azi	Distance	Alpha	Crit	Plume	Crit	Plume
SKY	10.	1.	1.0	168.	2.00	25.388*	.05	.446*
SKY	140.	1.	1.0	168.	2.00	5.772*	.05	-.248*
TERRAIN	10.	1.	1.0	168.	2.00	36.739*	.05	.437*
TERRAIN	140.	1.	1.0	168.	2.00	11.926*	.05	.434*

```
1                          PLUVUE II (VERSION 96170)
                        AN AIR QUALITY DISPERSION MODEL IN
                            THE OTHER MODELS SECTION
                     EPA SUPPORT CENTER FOR REGULATORY AIR MODELS

0
 VISUAL IMPACT ASSESSMENT FOR Hyperion March


     EMISSIONS SOURCE DATA

          ELEVATION OF SITE =      1220.  FEET MSL
                                    372.  METERS MSL

          NO. OF UNITS =     1.

          STACK HEIGHT =  160.  FEET
                           49.  METERS

          FLUE GAS FLOW RATE =    168757.  CU FT/MIN
                                    79.63  CU M/SEC

          FLUE GAS TEMPERATURE =       426.  F
                                       492.  K

          FLUE GAS OXYGEN CONTENT =        3.0  MOL PERCENT

          SO2 EMISSION RATE (TOTAL) =       2.34  TONS/DAY
                                        2.457E+01  G/SEC

          NOX EMISSION RATE (TOTAL,AS NO2) =       3.34  TONS/DAY
                                             3.507E+01  G/SEC

          PARTICULATE EMISSION RATE (TOTAL) =       2.84  TONS/DAY
                                             2.982E+01  G/SEC

0



     METEOROLOGICAL AND AMBIENT AIR QUALITY DATA

          WINDSPEED =   2.2  MILES/HR
                        1.0  M/SEC

          PASQUILL-GIFFORD-TURNER STABILITY CATEGORY F

          LAPSE RATE = 13.82  F/1000 FT
                         2.519E-02  K/M

          POTENTIAL TEMPERATURE LAPSE RATE =    3.499E-02  K/M

          AMBIENT TEMPERATURE =  32.0  F
                                273.2  K

          RELATIVE HUMIDITY =  78.0  %

          MIXING DEPTH =        0.0  M

          AMBIENT PRESSURE =  0.96  ATM

          BACKGROUND NOX CONCENTRATION =      0.006  PPM

          BACKGROUND NO2 CONCENTRATION =      0.006  PPM
```

```
         BACKGROUND OZONE CONCENTRATION =      0.080  PPM

         BACKGROUND SO2 CONCENTRATION =      0.008  PPM

  ROG =  0.1500        SIGMA =  2.0000        REFRACTIVE INDEX = 1.5000 +  0.000000
 LOG-NORMAL SIZE DISTRIBUTION (101 POINT HISTOGRAM)
  ROG =  3.0000        SIGMA =  2.2000        REFRACTIVE INDEX = 1.5000 +  0.000000
 LOG-NORMAL SIZE DISTRIBUTION (101 POINT HISTOGRAM)
  ROG =  1.0000        SIGMA =  2.0000        REFRACTIVE INDEX = 1.5000 +  0.000000
 LOG-NORMAL SIZE DISTRIBUTION (101 POINT HISTOGRAM)
  ROG =  0.0500        SIGMA =  2.0000        REFRACTIVE INDEX = 2.0000 +  1.000000
 LOG-NORMAL SIZE DISTRIBUTION (101 POINT HISTOGRAM)


         BACKGROUND COARSE MODE CONCENTRATION =        3.0  UG/M3

         BACKGROUND SULFATE CONCENTRATION =        2.3  UG/M3

         BACKGROUND NITRATE CONCENTRATION =        2.3  UG/M3

         BACKGROUND VISUAL RANGE =       59.8  KILOMETERS

         SO2 DEPOSITION VELOCITY =       1.00  CM/SEC

         NOX DEPOSITION VELOCITY =       1.00  CM/SEC

         COARSE PARTICULATE DEPOSITION VELOCITY =       0.10  CM/SEC

         SUBMICRON PARTICULATE DEPOSITION VELOCITY =       0.10  CM/SEC


                                 AEROSOL STATISTICS

                              BACKGROUND                                PLUME

                      ACCUMULATION          COARSE          ACCUMULATION          COARSE          CARBONACEOUS
         MASS MEDIAN       MODE               MODE               MODE               MODE               AEROSOLS
         RADIUS
         MICROMETERS         0.150              3.000              0.100              1.000              0.050

         GEOMETRIC
         STANDARD
         DEVIATION           2.000              2.200              2.000              2.000              2.000

         PARTICLE
         DENSITY
         G/(CM**3)           1.500              2.500              1.500              2.500              2.000

 CARBONACEOUS FRACTION OF PARTICLATE MASS EMISSIONS =      0.000

 BACKGROUND ATMOSPHERIC ELEMENTAL CARBON =      0.020 UG/M**3

0


     GEOMETRY OF USER-SPECIFIED PLUME-OBSERVER-SUN ORIENTATION


         WIND DIRECTION (DEGREES) = 40.0
```

SIMULATION IS FOR 729. HOURS ON 3/21

SOLAR ZENITH ANGLE (DEGREES) = 80.0

SOLAR AZIMUTH ANGLE (DEGREES) = 99.3

GEOMETRIES FOR LINES-OF-SIGHT THROUGH PLUME PARCELS AT GIVEN DOWNWIND DISTANCES (X)

X (KM)	AZIMUTH	RP	ALPHA	BETA	THETA
1.0	51.0	13.1	11.0	0.6	49.0
2.5	52.4	11.6	12.4	0.7	47.6
5.0	55.7	9.2	15.7	0.9	44.3
10.0	73.0	4.6	33.0	1.9	27.4
13.0	111.4	2.6	71.4	3.2	13.8

1 BACKGROUND CONDITIONS

ACCUMULATION MODE			COARSE PARTICLE MODE			PRIMARY PARTICLE MODE		
MASS RADIUS	SIGMA	BSCAT.55/MASS	MASS RADIUS	SIGMA	BSCAT.55/MASS	MASS RADIUS	SIGMA	BSCAT.55/MASS
0.1500E+00	0.2000E+01	0.1176E-01	0.3000E+01	0.2200E+01	0.3219E-03	0.1000E+01	0.2000E+01	0.1045E-02

REFRACTION INDEXES

ACCUMULATION MODE = 0.1500E+01 + I 0.0000E+00

COARSE MODE = 0.1500E+01 + I 0.0000E+00

PRIMARY AEROSOLS = 0.1500E+01 + I 0.0000E+00

CARBONACEOUS AEROSOLS = 0.2000E+01 + I 0.1000E+01

COEFFICIENTS AT 0.55 MICROMETERS , 1./KM

BTARAY =0.1119E-01 BTAAER =0.5403E-01 ABSNO2 =0.1802E-02 BTABAC =0.6539E-01

0

CONCENTRATIONS OF AEROSOL AND GASES CONTRIBUTED BY

Hyperion March

DOWNWIND DISTANCE (KM) = 1.0
PLUME ALTITUDE (M) = 148.
SIGMA Y (M) = 46.
SIGMA Z (M) = 17.
SO2-SO4 CONVERSION RATE= 0.0000 PERCENT/HR
NOX-NO3 CONVERSION RATE= 0.0000 PERCENT/HR

ALTITUDE	NOX (PPM)	NO2 (PPM)	NO3- (PPM)	NO2/NTOT (MOLE %)	NO3-/NTOT (MOLE %)	SO2 (PPM)	SO4= (UG/M3)	SO4=/STOT (MOLE %)	O3 (PPM)	PRIMARY (UG/M3)	BSP-TOTAL (10-4 M-1)	BSPSN/BSP (%)
H+2S												
INCREMENT:	0.218	0.076	0.000	35.048	0.000	0.110	0.000	0.000	-0.076	348.895	3.647	0.000
TOTAL AMB:	0.224	0.082	2.250	3.324	90.943	0.118	2.250	0.484	0.004	354.145	4.187	6.318
H+1S												
INCREMENT:	0.977	0.081	0.000	8.328	0.000	0.492	0.000	0.000	-0.079	1563.641	16.345	0.000
TOTAL AMB:	0.983	0.087	2.250	2.697	69.586	0.500	2.250	0.114	0.001	1568.891	16.885	1.567

```
  H
 INCREMENT:     1.611     0.083     0.000     5.151     0.000     0.812     0.000     0.000    -0.080  2578.007    26.948     0.000
 TOTAL AMB:     1.617     0.089     2.250     2.297    58.178     0.820     2.250     0.070     0.000  2583.257    27.488     0.962

  H-1S
 INCREMENT:     0.977     0.081     0.000     8.328     0.000     0.492     0.000     0.000    -0.079  1563.641    16.345     0.000
 TOTAL AMB:     0.983     0.087     2.250     2.697    69.586     0.500     2.250     0.114     0.001  1568.891    16.885     1.567

  H-2S
 INCREMENT:     0.218     0.076     0.000    35.048     0.000     0.110     0.000     0.000    -0.076   348.895     3.647     0.000
 TOTAL AMB:     0.224     0.082     2.250     3.324    90.943     0.118     2.250     0.484     0.004   354.145     4.187     6.318

   0
 INCREMENT:     0.000     0.000     0.000     0.000     0.000     0.000     0.000     0.000     0.000     0.000     0.000     0.000
 TOTAL AMB:     0.006     0.006     2.250     0.245    99.734     0.008     2.250     6.685     0.080     5.250     0.540    48.963



 CUMULATIVE SURFACE DEPOSITION (MOLE FRACTIONOF INITIAL FLUX


                SO2:    0.0000
                NOX:    0.0000
 PRIMARY PARTICULATE:    0.0000
                SO4:    0.0000
                NO3:    0.0000
0
                   VISUAL EFFECTS FOR HORIZONTAL SIGHT PATHS
                   Hyperion March

 DOWNWIND DISTANCE (KM) =    1.0
 PLUME ALTITUDE (M)     =   148.
 PLUME-OBSERVER DISTANCE (KM) =   13.1
 AZIMUTH OF LINE-OF-SIGHT =   51.0
 ELEVATION ANGLE OF LINE-OF-SIGHT =    0.6
 SOLAR ZENITH ANGLE =   80.0   AT  729. ON  3/21
 SIGHT PATH IS THROUGH PLUME CENTER

 THETA ALPHA  RP/RV0    RV  %REDUCED    YCAP       L       X       Y DELYCAP    DELL  C(550)  BRATIO    DELX    DELY  E(LUV)  E(LAB)

   49.
        11.    0.22    34.7   42.02  108.21  103.09  0.3777  0.3800   -3.37   -1.22 -0.0256  1.0575 -0.0027 -0.0005  2.6326  1.8945
0
                   VISUAL EFFECTS FOR HORIZONTAL SIGHT PATHS
                   Hyperion March

 DOWNWIND DISTANCE (KM) =    1.0
 PLUME ALTITUDE (M)     =   148.
 PLUME-OBSERVER DISTANCE (KM) =   13.1
 AZIMUTH OF LINE-OF-SIGHT =   51.0
 ELEVATION ANGLE OF LINE-OF-SIGHT =    0.6
 SOLAR ZENITH ANGLE =   80.0   AT  729. ON  3/21
 SIGHT PATH IS AT GROUND LEVEL

 THETA ALPHA  RP/RV0    RV  %REDUCED    YCAP       L       X       Y DELYCAP    DELL  C(550)  BRATIO    DELX    DELY  E(LUV)  E(LAB)

   49.
        11.    0.22    59.8    0.00  111.58  104.31  0.3804  0.3805    0.00    0.00  0.0000  1.0001  0.0000  0.0000  0.0034  0.0026
0
                         CONCENTRATIONS OF AEROSOL AND GASES CONTRIBUTED BY

                                   Hyperion March
```

```
 DOWNWIND DISTANCE (KM) =    2.5
 PLUME ALTITUDE (M)     =   148.
 SIGMA Y (M)            =    89.
 SIGMA Z (M)            =    27.
 SO2-SO4 CONVERSION RATE=      0.0000 PERCENT/HR
 NOX-NO3 CONVERSION RATE=      0.0001 PERCENT/HR
```

ALTITUDE	NOX (PPM)	NO2 (PPM)	NO3- (PPM)	NO2/NTOT (MOLE %)	NO3-/NTOT (MOLE %)	SO2 (PPM)	SO4= (UG/M3)	SO4=/STOT (MOLE %)	O3 (PPM)	PRIMARY (UG/M3)	BSP-TOTAL (10-4 M-1)	BSPSN/BSP (%)
H+2S												
INCREMENT:	0.074	0.056	0.000	76.120	0.000	0.037	0.000	0.000	-0.056	117.722	1.231	0.001
TOTAL AMB:	0.080	0.062	2.250	2.654	96.584	0.045	2.250	1.256	0.024	122.972	1.771	14.940
H+1S												
INCREMENT:	0.330	0.079	0.000	24.102	0.000	0.166	0.000	0.000	-0.078	527.593	5.515	0.000
TOTAL AMB:	0.336	0.085	2.250	3.299	87.014	0.174	2.250	0.328	0.002	532.843	6.055	4.369
H												
INCREMENT:	0.544	0.083	0.000	15.273	0.000	0.274	0.000	0.000	-0.079	869.853	9.092	0.000
TOTAL AMB:	0.550	0.089	2.250	3.174	80.365	0.282	2.250	0.203	0.001	875.103	9.633	2.746
H-1S												
INCREMENT:	0.330	0.079	0.000	24.102	0.000	0.166	0.000	0.000	-0.078	527.593	5.515	0.000
TOTAL AMB:	0.336	0.085	2.250	3.299	87.014	0.174	2.250	0.328	0.002	532.843	6.055	4.369
H-2S												
INCREMENT:	0.074	0.056	0.000	76.120	0.000	0.037	0.000	0.000	-0.056	117.722	1.231	0.001
TOTAL AMB:	0.080	0.062	2.250	2.654	96.584	0.045	2.250	1.256	0.024	122.972	1.771	14.940
0												
INCREMENT:	0.000	0.000	0.000	0.000	0.082	0.000	0.000	0.013	0.000	0.000	0.000	0.177
TOTAL AMB:	0.006	0.006	2.250	0.245	99.734	0.008	2.250	6.685	0.080	5.250	0.540	48.963

```
 CUMULATIVE SURFACE DEPOSITION (MOLE FRACTIONOF INITIAL FLUX

                 SO2:    0.0000
                 NOX:    0.0000
 PRIMARY PARTICULATE:    0.0000
                 SO4:    0.0000
                 NO3:    0.0000
0
                    VISUAL EFFECTS FOR HORIZONTAL SIGHT PATHS
                    Hyperion March

 DOWNWIND DISTANCE (KM) =    2.5
 PLUME ALTITUDE (M)     =   148.
 PLUME-OBSERVER DISTANCE (KM) =   11.6
 AZIMUTH OF LINE-OF-SIGHT =   52.4
 ELEVATION ANGLE OF LINE-OF-SIGHT =    0.7
 SOLAR ZENITH ANGLE =   80.0   AT  729. ON  3/21
 SIGHT PATH IS THROUGH PLUME CENTER
```

THETA	ALPHA	RP/RV0	RV	%REDUCED	YCAP	L	X	Y	DELYCAP	DELL	C(550)	BRATIO	DELX	DELY	E(LUV)	E(LAB)
48.																
	12.	0.19	45.0	24.71	111.38	104.24	0.3811	0.3819	-3.77	-1.34	-0.0296	1.0213	-0.0005	0.0006	1.5748	1.4333

0

VISUAL EFFECTS FOR HORIZONTAL SIGHT PATHS
Hyperion March

DOWNWIND DISTANCE (KM) = 2.5
PLUME ALTITUDE (M) = 148.
PLUME-OBSERVER DISTANCE (KM) = 11.6
AZIMUTH OF LINE-OF-SIGHT = 52.4
ELEVATION ANGLE OF LINE-OF-SIGHT = 0.7
SOLAR ZENITH ANGLE = 80.0 AT 729. ON 3/21
SIGHT PATH IS AT GROUND LEVEL

THETA	ALPHA	RP/RV0	RV	%REDUCED	YCAP	L	X	Y	DELYCAP	DELL	C(550)	BRATIO	DELX	DELY	E(LUV)	E(LAB)
48.																
	12.	0.19	59.8	0.00	115.16	105.58	0.3817	0.3813	0.00	0.00	0.0000	1.0001	0.0000	0.0000	0.0069	0.0053
0																

CONCENTRATIONS OF AEROSOL AND GASES CONTRIBUTED BY

Hyperion March

DOWNWIND DISTANCE (KM) = 5.0
PLUME ALTITUDE (M) = 148.
SIGMA Y (M) = 156.
SIGMA Z (M) = 35.
SO2-SO4 CONVERSION RATE= 0.0000 PERCENT/HR
NOX-NO3 CONVERSION RATE= 0.0003 PERCENT/HR

ALTITUDE	NOX (PPM)	NO2 (PPM)	NO3- (PPM)	NO2/NTOT (MOLE %)	NO3-/NTOT (MOLE %)	SO2 (PPM)	SO4= (UG/M3)	SO4=/STOT (MOLE %)	O3 (PPM)	PRIMARY (UG/M3)	BSP-TOTAL (10-4 M-1)	BSPSN/BSP (%)
H+2S												
INCREMENT:	0.031	0.027	0.000	86.750	0.003	0.016	0.000	0.001	-0.027	50.266	0.525	0.008
TOTAL AMB:	0.037	0.033	2.250	1.446	98.364	0.024	2.250	2.349	0.053	55.516	1.066	24.827
H+1S												
INCREMENT:	0.141	0.073	0.000	51.821	0.000	0.071	0.000	0.000	-0.072	225.278	2.355	0.000
TOTAL AMB:	0.147	0.079	2.250	3.287	93.875	0.079	2.250	0.721	0.008	230.528	2.895	9.138
H												
INCREMENT:	0.232	0.079	0.000	33.913	0.000	0.117	0.000	0.000	-0.076	371.421	3.882	0.000
TOTAL AMB:	0.238	0.085	2.250	3.398	90.428	0.125	2.250	0.457	0.004	376.671	4.423	5.982
H-1S												
INCREMENT:	0.141	0.073	0.000	51.821	0.000	0.071	0.000	0.000	-0.072	225.278	2.355	0.000
TOTAL AMB:	0.147	0.079	2.250	3.287	93.875	0.079	2.250	0.721	0.008	230.528	2.895	9.138
H-2S												
INCREMENT:	0.031	0.027	0.000	86.750	0.003	0.016	0.000	0.001	-0.027	50.266	0.525	0.008
TOTAL AMB:	0.037	0.033	2.250	1.446	98.364	0.024	2.250	2.349	0.053	55.516	1.066	24.827
0												
INCREMENT:	0.000	0.000	0.000	0.000	0.199	0.000	0.000	0.031	0.000	0.122	0.001	0.427
TOTAL AMB:	0.006	0.006	2.250	0.248	99.731	0.008	2.250	6.656	0.080	5.372	0.542	48.848

CUMULATIVE SURFACE DEPOSITION (MOLE FRACTIONOF INITIAL FLUX

SO2: 0.0000
NOX: 0.0000
PRIMARY PARTICULATE: 0.0000

```
                 SO4:    0.0000
                 NO3:    0.0000
0
                    VISUAL EFFECTS FOR HORIZONTAL SIGHT PATHS
                    Hyperion March

 DOWNWIND DISTANCE (KM) =    5.0
 PLUME ALTITUDE (M)     =   148.
 PLUME-OBSERVER DISTANCE (KM) =    9.2
 AZIMUTH OF LINE-OF-SIGHT =   55.7
 ELEVATION ANGLE OF LINE-OF-SIGHT =    0.9
 SOLAR ZENITH ANGLE =   80.0   AT  729. ON  3/21
 SIGHT PATH IS THROUGH PLUME CENTER

 THETA ALPHA  RP/RV0    RV  %REDUCED    YCAP       L       X       Y DELYCAP    DELL  C(550)  BRATIO    DELX    DELY  E(LUV)  E(LAB)

   44.
         16.    0.15    51.0   14.77  120.28  107.36  0.3866  0.3851   -4.31   -1.45 -0.0337  0.9817  0.0020  0.0018  2.1561  2.0055
0
                    VISUAL EFFECTS FOR HORIZONTAL SIGHT PATHS
                    Hyperion March

 DOWNWIND DISTANCE (KM) =    5.0
 PLUME ALTITUDE (M)     =   148.
 PLUME-OBSERVER DISTANCE (KM) =    9.2
 AZIMUTH OF LINE-OF-SIGHT =   55.7
 ELEVATION ANGLE OF LINE-OF-SIGHT =    0.9
 SOLAR ZENITH ANGLE =   80.0   AT  729. ON  3/21
 SIGHT PATH IS AT GROUND LEVEL

 THETA ALPHA  RP/RV0    RV  %REDUCED    YCAP       L       X       Y DELYCAP    DELL  C(550)  BRATIO    DELX    DELY  E(LUV)  E(LAB)

   44.
         16.    0.15    59.8    0.00  124.59  108.81  0.3846  0.3832    0.01    0.00  0.0000  1.0002  0.0000  0.0000  0.0102  0.0078
0
                         CONCENTRATIONS OF AEROSOL AND GASES CONTRIBUTED BY

                                   Hyperion March

 DOWNWIND DISTANCE (KM) =   10.0
 PLUME ALTITUDE (M)     =   148.
 SIGMA Y (M)            =   281.
 SIGMA Z (M)            =    47.
 SO2-SO4 CONVERSION RATE=      0.0002 PERCENT/HR
 NOX-NO3 CONVERSION RATE=      0.0012 PERCENT/HR

 ALTITUDE         NOX       NO2       NO3-  NO2/NTOT  NO3-/NTOT     SO2       SO4=  SO4=/STOT     O3     PRIMARY BSP-TOTAL  BSPSN/BSP
                (PPM)     (PPM)     (PPM)  (MOLE %)  (MOLE %)     (PPM)   (UG/M3)  (MOLE %)     (PPM)   (UG/M3) (10-4 M-1)   (%)

  H+2S
 INCREMENT:     0.013     0.012     0.000    87.976     0.029     0.007     0.001     0.005    -0.012    21.043     0.220     0.065
 TOTAL AMB:     0.019     0.017     2.250     0.766    99.156     0.015     2.251     3.773     0.068    26.293     0.760    34.810

  H+1S
 INCREMENT:     0.059     0.048     0.000    81.018     0.001     0.030     0.000     0.000    -0.047    94.309     0.986     0.004
 TOTAL AMB:     0.065     0.054     2.250     2.314    97.194     0.038     2.250     1.498     0.033    99.559     1.526    17.337

  H
 INCREMENT:     0.097     0.066     0.000    67.524     0.000     0.049     0.000     0.000    -0.064   155.489     1.625     0.002
 TOTAL AMB:     0.103     0.071     2.250     3.036    95.615     0.057     2.250     0.996     0.016   160.739     2.166    12.217

  H-1S
 INCREMENT:     0.059     0.048     0.000    81.018     0.001     0.030     0.000     0.000    -0.047    94.309     0.986     0.004
 TOTAL AMB:     0.065     0.054     2.250     2.314    97.194     0.038     2.250     1.498     0.033    99.559     1.526    17.337
```

```
  H-2S
 INCREMENT:     0.013     0.012     0.000    87.977     0.029     0.007     0.001     0.005    -0.012    21.060     0.220     0.065
 TOTAL AMB:     0.019     0.017     2.250     0.767    99.156     0.015     2.251     3.772     0.068    26.310     0.761    34.802

   0
 INCREMENT:     0.001     0.001     0.000    70.347     0.383     0.001     0.002     0.059    -0.001     2.252     0.024     0.816
 TOTAL AMB:     0.007     0.007     2.250     0.301    99.672     0.009     2.252     6.179     0.079     7.502     0.564    46.938




 CUMULATIVE SURFACE DEPOSITION (MOLE FRACTIONOF INITIAL FLUX


                 SO2:    0.0000
                 NOX:    0.0000
 PRIMARY PARTICULATE:    0.0000
                 SO4:    0.0000
                 NO3:    0.0000
0
                    VISUAL EFFECTS FOR HORIZONTAL SIGHT PATHS
                    Hyperion March

 DOWNWIND DISTANCE (KM) =   10.0
 PLUME ALTITUDE (M)     =   148.
 PLUME-OBSERVER DISTANCE (KM) =    4.6
 AZIMUTH OF LINE-OF-SIGHT =   73.0
 ELEVATION ANGLE OF LINE-OF-SIGHT =    1.9
 SOLAR ZENITH ANGLE =   80.0   AT  729. ON  3/21
 SIGHT PATH IS THROUGH PLUME CENTER

 THETA ALPHA  RP/RV0    RV  %REDUCED    YCAP       L       X       Y DELYCAP    DELL  C(550)  BRATIO    DELX    DELY  E(LUV)  E(LAB)

   27.
         33.    0.08    56.4    5.65  194.78  128.84  0.4012  0.3946   -3.24   -0.80 -0.0189  0.9233  0.0047  0.0029  4.3902  3.4880
0
                    VISUAL EFFECTS FOR HORIZONTAL SIGHT PATHS
                    Hyperion March

 DOWNWIND DISTANCE (KM) =   10.0
 PLUME ALTITUDE (M)     =   148.
 PLUME-OBSERVER DISTANCE (KM) =    4.6
 AZIMUTH OF LINE-OF-SIGHT =   73.0
 ELEVATION ANGLE OF LINE-OF-SIGHT =    1.9
 SOLAR ZENITH ANGLE =   80.0   AT  729. ON  3/21
 SIGHT PATH IS AT GROUND LEVEL

 THETA ALPHA  RP/RV0    RV  %REDUCED    YCAP       L       X       Y DELYCAP    DELL  C(550)  BRATIO    DELX    DELY  E(LUV)  E(LAB)

   27.
         33.    0.08    59.8    0.08  197.98  129.62  0.3966  0.3917   -0.05   -0.01 -0.0003  0.9988  0.0001  0.0000  0.0670  0.0531
0
                         CONCENTRATIONS OF AEROSOL AND GASES CONTRIBUTED BY

                                   Hyperion March

 DOWNWIND DISTANCE (KM) =   13.0
 PLUME ALTITUDE (M)     =   148.
 SIGMA Y (M)            =   351.
 SIGMA Z (M)            =    52.
 SO2-SO4 CONVERSION RATE=      0.0009 PERCENT/HR
 NOX-NO3 CONVERSION RATE=      0.0065 PERCENT/HR
```

ALTITUDE	NOX (PPM)	NO2 (PPM)	NO3- (PPM)	NO2/NTOT (MOLE %)	NO3-/NTOT (MOLE %)	SO2 (PPM)	SO4= (UG/M3)	SO4=/STOT (MOLE %)	O3 (PPM)	PRIMARY (UG/M3)	BSP-TOTAL (10-4 M-1)	BSPSN/BSP (%)
H+2S												
INCREMENT:	0.009	0.008	0.000	87.412	0.051	0.005	0.001	0.008	-0.008	15.120	0.158	0.111
TOTAL AMB:	0.015	0.014	2.250	0.621	99.319	0.013	2.251	4.303	0.072	20.370	0.699	37.898
H+1S												
INCREMENT:	0.042	0.036	0.000	84.903	0.006	0.021	0.001	0.001	-0.036	67.764	0.708	0.015
TOTAL AMB:	0.048	0.042	2.250	1.818	97.898	0.029	2.251	1.918	0.044	73.014	1.249	21.194
H												
INCREMENT:	0.070	0.054	0.000	77.728	0.002	0.035	0.001	0.000	-0.053	111.724	1.168	0.005
TOTAL AMB:	0.076	0.060	2.250	2.584	96.742	0.043	2.251	1.311	0.027	116.974	1.708	15.491
H-1S												
INCREMENT:	0.042	0.036	0.000	84.903	0.006	0.021	0.001	0.001	-0.036	67.766	0.708	0.015
TOTAL AMB:	0.048	0.042	2.250	1.818	97.898	0.029	2.251	1.918	0.044	73.016	1.249	21.194
H-2S												
INCREMENT:	0.010	0.008	0.000	87.431	0.051	0.005	0.002	0.008	-0.008	15.262	0.160	0.111
TOTAL AMB:	0.016	0.014	2.250	0.625	99.315	0.013	2.252	4.288	0.072	20.512	0.700	37.818
0												
INCREMENT:	0.003	0.002	0.000	79.663	0.260	0.001	0.002	0.040	-0.002	4.121	0.043	0.548
TOTAL AMB:	0.009	0.008	2.250	0.348	99.621	0.009	2.252	5.813	0.078	9.371	0.584	45.371

CUMULATIVE SURFACE DEPOSITION (MOLE FRACTIONOF INITIAL FLUX

SO2: 0.0009
NOX: 0.0009
PRIMARY PARTICULATE: 0.0001
SO4: 0.0000
NO3: 0.0000

0

VISUAL EFFECTS FOR HORIZONTAL SIGHT PATHS
Hyperion March

DOWNWIND DISTANCE (KM) = 13.0
PLUME ALTITUDE (M) = 148.
PLUME-OBSERVER DISTANCE (KM) = 2.6
AZIMUTH OF LINE-OF-SIGHT = 111.4
ELEVATION ANGLE OF LINE-OF-SIGHT = 3.2
SOLAR ZENITH ANGLE = 80.0 AT 729. ON 3/21
SIGHT PATH IS THROUGH PLUME CENTER

THETA	ALPHA	RP/RV0	RV	%REDUCED	YCAP	L	X	Y	DELYCAP	DELL	C(550)	BRATIO	DELX	DELY	E(LUV)	E(LAB)
14.																
	71.	0.04	57.4	4.12	301.96	151.60	0.4050	0.3981	11.39	2.13	0.0367	0.9063	0.0046	0.0028	5.8882	4.8003

0

VISUAL EFFECTS FOR HORIZONTAL SIGHT PATHS
Hyperion March

DOWNWIND DISTANCE (KM) = 13.0
PLUME ALTITUDE (M) = 148.
PLUME-OBSERVER DISTANCE (KM) = 2.6
AZIMUTH OF LINE-OF-SIGHT = 111.4

```
 ELEVATION ANGLE OF LINE-OF-SIGHT =    3.2
 SOLAR ZENITH ANGLE =   80.0   AT  729. ON  3/21
 SIGHT PATH IS AT GROUND LEVEL

 THETA ALPHA  RP/RV0    RV  %REDUCED    YCAP       L       X       Y DELYCAP    DELL  C(550)  BRATIO    DELX    DELY  E(LUV)  E(LAB)

   14.
        71.    0.04    59.7    0.16  291.02  149.55  0.4006  0.3954    0.45    0.09  0.0015  0.9962  0.0002  0.0001  0.2299  0.1872
0
 HISTORY OF PLUME PARCEL AT DOWNWIND DISTANCE =   1.0 KM


    PARCEL     LOCAL       SO2-TO-SO4= CONVERSION RATE (%/HR)       NOX-TO-HNO3 CONVERSION RATE (%/HR)
      AGE       TIME
      (HR)                 H+2S  H+1S  H     H-1S  H-2S   0         H+2S  H+1S  H     H-1S  H-2S   0

       0.1       728       0.00  0.00  0.00  0.00  0.00  0.00       0.00  0.00  0.00  0.00  0.00  0.00
0
 HISTORY OF PLUME PARCEL AT DOWNWIND DISTANCE =   2.5 KM


    PARCEL     LOCAL       SO2-TO-SO4= CONVERSION RATE (%/HR)       NOX-TO-HNO3 CONVERSION RATE (%/HR)
      AGE       TIME
      (HR)                 H+2S  H+1S  H     H-1S  H-2S   0         H+2S  H+1S  H     H-1S  H-2S   0

       0.1       717       0.00  0.00  0.00  0.00  0.00  0.00       0.00  0.00  0.00  0.00  0.00  0.00
       0.3       728       0.00  0.00  0.00  0.00  0.00  0.07       0.00  0.00  0.00  0.00  0.00  0.47
0
 HISTORY OF PLUME PARCEL AT DOWNWIND DISTANCE =   5.0 KM


    PARCEL     LOCAL       SO2-TO-SO4= CONVERSION RATE (%/HR)       NOX-TO-HNO3 CONVERSION RATE (%/HR)
      AGE       TIME
      (HR)                 H+2S  H+1S  H     H-1S  H-2S   0         H+2S  H+1S  H     H-1S  H-2S   0

       0.1       658       0.00  0.00  0.00  0.00  0.00  0.00       0.00  0.00  0.00  0.00  0.00  0.00
       0.3       710       0.00  0.00  0.00  0.00  0.00  0.05       0.00  0.00  0.00  0.00  0.00  0.36
       0.6       728       0.00  0.00  0.00  0.00  0.00  0.07       0.01  0.00  0.00  0.00  0.01  0.47
0
 HISTORY OF PLUME PARCEL AT DOWNWIND DISTANCE =  10.0 KM


    PARCEL     LOCAL       SO2-TO-SO4= CONVERSION RATE (%/HR)       NOX-TO-HNO3 CONVERSION RATE (%/HR)
      AGE       TIME
      (HR)                 H+2S  H+1S  H     H-1S  H-2S   0         H+2S  H+1S  H     H-1S  H-2S   0

       0.1       621       0.00  0.00  0.00  0.00  0.00  0.00       0.00  0.00  0.00  0.00  0.00  0.00
       0.3       632       0.00  0.00  0.00  0.00  0.00  0.03       0.00  0.00  0.00  0.00  0.00  0.18
       0.6       651       0.00  0.00  0.00  0.00  0.00  0.04       0.01  0.00  0.00  0.00  0.01  0.28
       1.3       728       0.01  0.00  0.00  0.00  0.01  0.07       0.05  0.00  0.00  0.00  0.05  0.47
0
 HISTORY OF PLUME PARCEL AT DOWNWIND DISTANCE =  13.0 KM


    PARCEL     LOCAL       SO2-TO-SO4= CONVERSION RATE (%/HR)       NOX-TO-HNO3 CONVERSION RATE (%/HR)
      AGE       TIME
      (HR)                 H+2S  H+1S  H     H-1S  H-2S   0         H+2S  H+1S  H     H-1S  H-2S   0

       0.1       558       0.00  0.00  0.00  0.00  0.00  0.00       0.00  0.00  0.00  0.00  0.00  0.00
       0.3       609       0.00  0.00  0.00  0.00  0.00  0.01       0.00  0.00  0.00  0.00  0.00  0.06
       0.6       628       0.00  0.00  0.00  0.00  0.00  0.01       0.00  0.00  0.00  0.00  0.00  0.10
       1.3       706       0.00  0.00  0.00  0.00  0.00  0.02       0.02  0.00  0.00  0.00  0.02  0.15
       1.6       728       0.02  0.00  0.00  0.00  0.02  0.05       0.12  0.02  0.01  0.02  0.12  0.37
1                                                     PLOT FILE VERIFICATION
```

```
0                                                        OBSERVER-BASED DATA
0     SKY BACKGROUND
      For ground level if calculations done for both plume centerline and ground level.
0         NX             1      2      3      4      5
0   DISTANCE (KM)       1.     3.     5.    10.    13.
0 REDUCTION OF VISUAL
      RANGE (%)       0.000  0.000  0.004  0.081  0.155
0  BLUE-RED RATIO
                      1.000  1.000  1.000  0.999  0.996
0  PLUME CONTRAST AT
     0.55 MICRONS     0.000  0.000  0.000  0.000  0.001
0PLUME PERCEPTIBILITY
   DELTA E(L*A*B*)    0.003  0.005  0.008  0.053  0.187

0   WHITE BACKGROUND
0         NX             1      2      3      4      5
0   DISTANCE (KM)       1.     3.     5.    10.    13.
0 REDUCTION OF VISUAL
      RANGE (%)       0.000  0.000  0.000  0.000  0.000
0  BLUE-RED RATIO
                      0.000  0.000  0.000  0.000  0.000
0  PLUME CONTRAST AT
     0.55 MICRONS
  EYE ACCOMODATED TO
       BACKGROUND     0.000  0.000  0.000  0.000  0.000
  EYE ACCOMODATED TO
       SKY            0.000  0.000  0.000  0.000  0.000
0PLUME PERCEPTIBILITY
   DELTA E(L*A*B*)    0.000  0.000  0.000  0.000  0.000

0    GRAY BACKGROUND
0         NX             1      2      3      4      5
0   DISTANCE (KM)       1.     3.     5.    10.    13.
0 REDUCTION OF VISUAL
      RANGE (%)       0.000  0.000  0.000  0.000  0.000
0  BLUE-RED RATIO
                      0.000  0.000  0.000  0.000  0.000
0  PLUME CONTRAST AT
     0.55 MICRONS
  EYE ACCOMODATED TO
       BACKGROUND     0.000  0.000  0.000  0.000  0.000
  EYE ACCOMODATED TO
       SKY            0.000  0.000  0.000  0.000  0.000
0PLUME PERCEPTIBILITY
   DELTA E(L*A*B*)    0.000  0.000  0.000  0.000  0.000
1   BLACK BACKGROUND
0         NX             1      2      3      4      5
0   DISTANCE (KM)       1.     3.     5.    10.    13.
0 REDUCTION OF VISUAL
      RANGE (%)       0.000  0.000  0.000  0.000  0.000
0  BLUE-RED RATIO
                      0.000  0.000  0.000  0.000  0.000
0  PLUME CONTRAST AT
     0.55 MICRONS
  EYE ACCOMODATED TO
       BACKGROUND     0.000  0.000  0.000  0.000  0.000
  EYE ACCOMODATED TO
       SKY            0.000  0.000  0.000  0.000  0.000
0PLUME PERCEPTIBILITY
   DELTA E(L*A*B*)    0.000  0.000  0.000  0.000  0.000
```

```
1                          PLUVUE II (VERSION 96170)
                        AN AIR QUALITY DISPERSION MODEL IN
                            THE OTHER MODELS SECTION
                     EPA SUPPORT CENTER FOR REGULATORY AIR MODELS

0
 VISUAL IMPACT ASSESSMENT FOR Hyperion June


     EMISSIONS SOURCE DATA

          ELEVATION OF SITE =      1220.  FEET MSL
                                    372.  METERS MSL

          NO. OF UNITS =     1.

          STACK HEIGHT =  160.  FEET
                           49.  METERS

          FLUE GAS FLOW RATE =    168757.  CU FT/MIN
                                    79.63  CU M/SEC

          FLUE GAS TEMPERATURE =       426.  F
                                       492.  K

          FLUE GAS OXYGEN CONTENT =        3.0  MOL PERCENT

          SO2 EMISSION RATE (TOTAL) =       2.34  TONS/DAY
                                        2.457E+01  G/SEC

          NOX EMISSION RATE (TOTAL,AS NO2) =       3.34  TONS/DAY
                                             3.507E+01  G/SEC

          PARTICULATE EMISSION RATE (TOTAL) =       2.84  TONS/DAY
                                             2.982E+01  G/SEC

0



     METEOROLOGICAL AND AMBIENT AIR QUALITY DATA

          WINDSPEED =   2.2  MILES/HR
                        1.0  M/SEC

          PASQUILL-GIFFORD-TURNER STABILITY CATEGORY F

          LAPSE RATE = 13.82  F/1000 FT
                         2.519E-02  K/M

          POTENTIAL TEMPERATURE LAPSE RATE =    3.499E-02  K/M

          AMBIENT TEMPERATURE =  68.0  F
                                293.2  K

          RELATIVE HUMIDITY =  83.0  %

          MIXING DEPTH =        0.0  M

          AMBIENT PRESSURE =  0.96  ATM

          BACKGROUND NOX CONCENTRATION =      0.006  PPM

          BACKGROUND NO2 CONCENTRATION =      0.006  PPM
```

```
         BACKGROUND OZONE CONCENTRATION =      0.080  PPM

         BACKGROUND SO2 CONCENTRATION =      0.008  PPM

  ROG =  0.1500        SIGMA =  2.0000        REFRACTIVE INDEX = 1.5000 +  0.000000
 LOG-NORMAL SIZE DISTRIBUTION (101 POINT HISTOGRAM)
  ROG =  3.0000        SIGMA =  2.2000        REFRACTIVE INDEX = 1.5000 +  0.000000
 LOG-NORMAL SIZE DISTRIBUTION (101 POINT HISTOGRAM)
  ROG =  1.0000        SIGMA =  2.0000        REFRACTIVE INDEX = 1.5000 +  0.000000
 LOG-NORMAL SIZE DISTRIBUTION (101 POINT HISTOGRAM)
  ROG =  0.0500        SIGMA =  2.0000        REFRACTIVE INDEX = 2.0000 +  1.000000
 LOG-NORMAL SIZE DISTRIBUTION (101 POINT HISTOGRAM)


         BACKGROUND COARSE MODE CONCENTRATION =        3.0  UG/M3

         BACKGROUND SULFATE CONCENTRATION =        2.3  UG/M3

         BACKGROUND NITRATE CONCENTRATION =        2.3  UG/M3

         BACKGROUND VISUAL RANGE =       49.5  KILOMETERS

         SO2 DEPOSITION VELOCITY =       1.00  CM/SEC

         NOX DEPOSITION VELOCITY =       1.00  CM/SEC

         COARSE PARTICULATE DEPOSITION VELOCITY =       0.10  CM/SEC

         SUBMICRON PARTICULATE DEPOSITION VELOCITY =       0.10  CM/SEC


                                  AEROSOL STATISTICS

                               BACKGROUND                                PLUME

                      ACCUMULATION          COARSE          ACCUMULATION          COARSE          CARBONACEOUS
         MASS MEDIAN       MODE               MODE               MODE               MODE               AEROSOLS
         RADIUS
         MICROMETERS         0.150              3.000              0.100              1.000              0.050

         GEOMETRIC
         STANDARD
         DEVIATION           2.000              2.200              2.000              2.000              2.000

         PARTICLE
         DENSITY
         G/(CM**3)           1.500              2.500              1.500              2.500              2.000

 CARBONACEOUS FRACTION OF PARTICLATE MASS EMISSIONS =      0.000

 BACKGROUND ATMOSPHERIC ELEMENTAL CARBON =      0.020 UG/M**3

0


     GEOMETRY OF USER-SPECIFIED PLUME-OBSERVER-SUN ORIENTATION


         WIND DIRECTION (DEGREES) = 40.0
```

SIMULATION IS FOR 549. HOURS ON 6/21

SOLAR ZENITH ANGLE (DEGREES) = 81.1

SOLAR AZIMUTH ANGLE (DEGREES) = 66.2

GEOMETRIES FOR LINES-OF-SIGHT THROUGH PLUME PARCELS AT GIVEN DOWNWIND DISTANCES (X)

X (KM)	AZIMUTH	RP	ALPHA	BETA	THETA
1.0	51.0	13.1	11.0	0.6	17.3
2.5	52.4	11.6	12.4	0.7	16.0
5.0	55.7	9.2	15.7	0.9	13.1
10.0	73.0	4.6	33.0	1.8	9.8
13.0	111.4	2.6	71.4	3.2	45.3

1 BACKGROUND CONDITIONS

ACCUMULATION MODE			COARSE PARTICLE MODE			PRIMARY PARTICLE MODE		
MASS RADIUS	SIGMA	BSCAT.55/MASS	MASS RADIUS	SIGMA	BSCAT.55/MASS	MASS RADIUS	SIGMA	BSCAT.55/MASS
0.1500E+00	0.2000E+01	0.1478E-01	0.3000E+01	0.2200E+01	0.3219E-03	0.1000E+01	0.2000E+01	0.1045E-02

REFRACTION INDEXES

ACCUMULATION MODE = 0.1500E+01 + I 0.0000E+00

COARSE MODE = 0.1500E+01 + I 0.0000E+00

PRIMARY AEROSOLS = 0.1500E+01 + I 0.0000E+00

CARBONACEOUS AEROSOLS = 0.2000E+01 + I 0.1000E+01

COEFFICIENTS AT 0.55 MICROMETERS , 1./KM

BTARAY =0.1119E-01 BTAAER =0.6762E-01 ABSNO2 =0.1816E-02 BTABAC =0.7899E-01

0

CONCENTRATIONS OF AEROSOL AND GASES CONTRIBUTED BY

Hyperion June

DOWNWIND DISTANCE (KM) = 1.0
PLUME ALTITUDE (M) = 147.
SIGMA Y (M) = 46.
SIGMA Z (M) = 17.
SO2-SO4 CONVERSION RATE= 0.0000 PERCENT/HR
NOX-NO3 CONVERSION RATE= 0.0000 PERCENT/HR

ALTITUDE	NOX (PPM)	NO2 (PPM)	NO3- (PPM)	NO2/NTOT (MOLE %)	NO3-/NTOT (MOLE %)	SO2 (PPM)	SO4= (UG/M3)	SO4=/STOT (MOLE %)	O3 (PPM)	PRIMARY (UG/M3)	BSP-TOTAL (10-4 M-1)	BSPSN/BSP (%)
H+2S												
INCREMENT:	0.237	0.077	0.000	32.584	0.000	0.119	0.000	0.000	-0.077	378.397	3.955	0.000
TOTAL AMB:	0.243	0.083	2.250	3.327	90.270	0.127	2.250	0.449	0.003	383.647	4.631	7.179
H+1S												
INCREMENT:	1.060	0.082	0.000	7.703	0.000	0.534	0.000	0.000	-0.079	1695.857	17.727	0.000
TOTAL AMB:	1.066	0.088	2.250	2.639	67.852	0.542	2.250	0.106	0.001	1701.107	18.403	1.807

```
 H
INCREMENT:     1.748     0.083     0.000     4.769     0.000     0.880     0.000     0.000    -0.080  2795.996    29.226     0.000
TOTAL AMB:     1.754     0.089     2.250     2.228    56.198     0.888     2.250     0.064     0.000  2801.246    29.902     1.112

 H-1S
INCREMENT:     1.060     0.082     0.000     7.703     0.000     0.534     0.000     0.000    -0.079  1695.857    17.727     0.000
TOTAL AMB:     1.066     0.088     2.250     2.639    67.852     0.542     2.250     0.106     0.001  1701.107    18.403     1.807

 H-2S
INCREMENT:     0.237     0.077     0.000    32.584     0.000     0.119     0.000     0.000    -0.077   378.397     3.955     0.000
TOTAL AMB:     0.243     0.083     2.250     3.327    90.270     0.127     2.250     0.449     0.003   383.647     4.631     7.179

  0
INCREMENT:     0.000     0.000     0.000     0.000     0.000     0.000     0.000     0.000     0.000     0.000     0.000     0.000
TOTAL AMB:     0.006     0.006     2.250     0.246    99.734     0.008     2.250     6.685     0.080     5.250     0.676    49.172



CUMULATIVE SURFACE DEPOSITION (MOLE FRACTIONOF INITIAL FLUX


                SO2:    0.0000
                NOX:    0.0000
PRIMARY PARTICULATE:    0.0000
                SO4:    0.0000
                NO3:    0.0000
0
                   VISUAL EFFECTS FOR HORIZONTAL SIGHT PATHS
                   Hyperion June

DOWNWIND DISTANCE (KM) =    1.0
PLUME ALTITUDE (M)     =   147.
PLUME-OBSERVER DISTANCE (KM) =   13.1
AZIMUTH OF LINE-OF-SIGHT =   51.0
ELEVATION ANGLE OF LINE-OF-SIGHT =    0.6
SOLAR ZENITH ANGLE =   81.1   AT  549. ON  6/21
SIGHT PATH IS THROUGH PLUME CENTER

THETA ALPHA  RP/RV0    RV  %REDUCED    YCAP       L       X       Y DELYCAP    DELL  C(550)  BRATIO    DELX    DELY  E(LUV)  E(LAB)

  17.
       11.    0.26    25.8   47.83  304.11  152.00  0.4167  0.4002   23.72    4.48  0.0745  0.8519  0.0074  0.0021 10.4651  7.8126
0
                   VISUAL EFFECTS FOR HORIZONTAL SIGHT PATHS
                   Hyperion June

DOWNWIND DISTANCE (KM) =    1.0
PLUME ALTITUDE (M)     =   147.
PLUME-OBSERVER DISTANCE (KM) =   13.1
AZIMUTH OF LINE-OF-SIGHT =   51.0
ELEVATION ANGLE OF LINE-OF-SIGHT =    0.6
SOLAR ZENITH ANGLE =   81.1   AT  549. ON  6/21
SIGHT PATH IS AT GROUND LEVEL

THETA ALPHA  RP/RV0    RV  %REDUCED    YCAP       L       X       Y DELYCAP    DELL  C(550)  BRATIO    DELX    DELY  E(LUV)  E(LAB)

  17.
       11.    0.26    49.5    0.00  280.40  147.52  0.4093  0.3980    0.01    0.00  0.0000  1.0000  0.0000  0.0000  0.0035  0.0027
0
                        CONCENTRATIONS OF AEROSOL AND GASES CONTRIBUTED BY

                                  Hyperion June
```

```
 DOWNWIND DISTANCE (KM) =    2.5
 PLUME ALTITUDE (M)     =   147.
 SIGMA Y (M)            =    89.
 SIGMA Z (M)            =    26.
 SO2-SO4 CONVERSION RATE=      0.0000 PERCENT/HR
 NOX-NO3 CONVERSION RATE=      0.0001 PERCENT/HR
```

ALTITUDE	NOX (PPM)	NO2 (PPM)	NO3- (PPM)	NO2/NTOT (MOLE %)	NO3-/NTOT (MOLE %)	SO2 (PPM)	SO4= (UG/M3)	SO4=/STOT (MOLE %)	O3 (PPM)	PRIMARY (UG/M3)	BSP-TOTAL (10-4 M-1)	BSPSN/BSP (%)
H+2S												
INCREMENT:	0.079	0.059	0.000	74.492	0.000	0.040	0.000	0.000	-0.059	127.062	1.328	0.001
TOTAL AMB:	0.085	0.065	2.250	2.784	96.342	0.048	2.250	1.180	0.021	132.312	2.004	16.589
H+1S												
INCREMENT:	0.356	0.080	0.000	22.446	0.000	0.179	0.000	0.000	-0.078	569.452	5.952	0.000
TOTAL AMB:	0.362	0.086	2.250	3.283	86.143	0.187	2.250	0.305	0.002	574.702	6.629	5.016
H												
INCREMENT:	0.587	0.083	0.000	14.213	0.000	0.296	0.000	0.000	-0.079	938.867	9.814	0.000
TOTAL AMB:	0.593	0.089	2.250	3.140	79.146	0.304	2.250	0.188	0.001	944.117	10.490	3.170
H-1S												
INCREMENT:	0.356	0.080	0.000	22.446	0.000	0.179	0.000	0.000	-0.078	569.451	5.952	0.000
TOTAL AMB:	0.362	0.086	2.250	3.283	86.143	0.187	2.250	0.305	0.002	574.701	6.629	5.016
H-2S												
INCREMENT:	0.079	0.059	0.000	74.492	0.000	0.040	0.000	0.000	-0.059	127.062	1.328	0.001
TOTAL AMB:	0.085	0.065	2.250	2.784	96.342	0.048	2.250	1.180	0.021	132.312	2.004	16.589
0												
INCREMENT:	0.000	0.000	0.000	0.000	0.222	0.000	0.000	0.034	0.000	0.000	0.000	0.597
TOTAL AMB:	0.006	0.006	2.250	0.246	99.734	0.008	2.250	6.685	0.080	5.250	0.676	49.171

```
 CUMULATIVE SURFACE DEPOSITION (MOLE FRACTIONOF INITIAL FLUX

                 SO2:    0.0000
                 NOX:    0.0000
 PRIMARY PARTICULATE:    0.0000
                 SO4:    0.0000
                 NO3:    0.0000
0
                    VISUAL EFFECTS FOR HORIZONTAL SIGHT PATHS
                    Hyperion June

 DOWNWIND DISTANCE (KM) =    2.5
 PLUME ALTITUDE (M)     =   147.
 PLUME-OBSERVER DISTANCE (KM) =   11.6
 AZIMUTH OF LINE-OF-SIGHT =   52.4
 ELEVATION ANGLE OF LINE-OF-SIGHT =    0.7
 SOLAR ZENITH ANGLE =   81.1   AT  549. ON  6/21
 SIGHT PATH IS THROUGH PLUME CENTER
```

THETA	ALPHA	RP/RV0	RV	%REDUCED	YCAP	L	X	Y	DELYCAP	DELL	C(550)	BRATIO	DELX	DELY	E(LUV)	E(LAB)
16.																
	12.	0.23	35.1	29.18	314.13	153.82	0.4181	0.4011	24.44	4.52	0.0738	0.8414	0.0084	0.0028	11.6374	8.6848

0

VISUAL EFFECTS FOR HORIZONTAL SIGHT PATHS
Hyperion June

DOWNWIND DISTANCE (KM) = 2.5
PLUME ALTITUDE (M) = 147.
PLUME-OBSERVER DISTANCE (KM) = 11.6
AZIMUTH OF LINE-OF-SIGHT = 52.4
ELEVATION ANGLE OF LINE-OF-SIGHT = 0.7
SOLAR ZENITH ANGLE = 81.1 AT 549. ON 6/21
SIGHT PATH IS AT GROUND LEVEL

THETA	ALPHA	RP/RV0	RV	%REDUCED	YCAP	L	X	Y	DELYCAP	DELL	C(550)	BRATIO	DELX	DELY	E(LUV)	E(LAB)
16.																
	12.	0.23	49.5	0.00	289.70	149.31	0.4096	0.3984	0.01	0.00	0.0000	1.0001	0.0000	0.0000	0.0075	0.0057

0

CONCENTRATIONS OF AEROSOL AND GASES CONTRIBUTED BY

Hyperion June

DOWNWIND DISTANCE (KM) = 5.0
PLUME ALTITUDE (M) = 147.
SIGMA Y (M) = 156.
SIGMA Z (M) = 35.
SO2-SO4 CONVERSION RATE= 0.0001 PERCENT/HR
NOX-NO3 CONVERSION RATE= 0.0008 PERCENT/HR

ALTITUDE	NOX (PPM)	NO2 (PPM)	NO3- (PPM)	NO2/NTOT (MOLE %)	NO3-/NTOT (MOLE %)	SO2 (PPM)	SO4= (UG/M3)	SO4=/STOT (MOLE %)	O3 (PPM)	PRIMARY (UG/M3)	BSP-TOTAL (10-4 M-1)	BSPSN/BSP (%)
H+2S												
INCREMENT:	0.034	0.029	0.000	86.849	0.006	0.017	0.001	0.001	-0.029	54.147	0.566	0.022
TOTAL AMB:	0.040	0.035	2.250	1.539	98.260	0.025	2.251	2.238	0.051	59.397	1.242	26.774
H+1S												
INCREMENT:	0.152	0.074	0.000	48.948	0.000	0.076	0.000	0.000	-0.073	242.671	2.537	0.001
TOTAL AMB:	0.158	0.080	2.250	3.327	93.451	0.084	2.250	0.675	0.007	247.921	3.213	10.350
H												
INCREMENT:	0.250	0.079	0.000	31.736	0.000	0.126	0.000	0.000	-0.077	400.096	4.182	0.001
TOTAL AMB:	0.256	0.085	2.250	3.401	89.781	0.134	2.250	0.426	0.003	405.346	4.858	6.844
H-1S												
INCREMENT:	0.152	0.074	0.000	48.948	0.000	0.076	0.000	0.000	-0.073	242.671	2.537	0.001
TOTAL AMB:	0.158	0.080	2.250	3.327	93.451	0.084	2.250	0.675	0.007	247.921	3.213	10.350
H-2S												
INCREMENT:	0.034	0.029	0.000	86.849	0.006	0.017	0.001	0.001	-0.029	54.147	0.566	0.022
TOTAL AMB:	0.040	0.035	2.250	1.539	98.260	0.025	2.251	2.238	0.051	59.397	1.242	26.774
0												
INCREMENT:	0.000	0.000	0.000	0.000	0.549	0.000	0.000	0.085	0.000	0.144	0.002	1.458
TOTAL AMB:	0.006	0.006	2.250	0.249	99.730	0.008	2.250	6.651	0.080	5.394	0.678	49.064

CUMULATIVE SURFACE DEPOSITION (MOLE FRACTIONOF INITIAL FLUX

SO2: 0.0000
NOX: 0.0000
PRIMARY PARTICULATE: 0.0000

```
                 SO4:    0.0000
                 NO3:    0.0000
0
                    VISUAL EFFECTS FOR HORIZONTAL SIGHT PATHS
                    Hyperion June

 DOWNWIND DISTANCE (KM) =    5.0
 PLUME ALTITUDE (M)     =   147.
 PLUME-OBSERVER DISTANCE (KM) =    9.2
 AZIMUTH OF LINE-OF-SIGHT =   55.7
 ELEVATION ANGLE OF LINE-OF-SIGHT =    0.9
 SOLAR ZENITH ANGLE =   81.1   AT  549. ON  6/21
 SIGHT PATH IS THROUGH PLUME CENTER

 THETA ALPHA  RP/RV0    RV  %REDUCED    YCAP       L       X       Y DELYCAP    DELL  C(550)  BRATIO    DELX    DELY  E(LUV)  E(LAB)

   13.
         16.    0.19    39.9   19.39  348.99  159.88  0.4210  0.4032   37.66    6.56  0.1080  0.8054  0.0107  0.0041 15.5151 12.0664
0
                    VISUAL EFFECTS FOR HORIZONTAL SIGHT PATHS
                    Hyperion June

 DOWNWIND DISTANCE (KM) =    5.0
 PLUME ALTITUDE (M)     =   147.
 PLUME-OBSERVER DISTANCE (KM) =    9.2
 AZIMUTH OF LINE-OF-SIGHT =   55.7
 ELEVATION ANGLE OF LINE-OF-SIGHT =    0.9
 SOLAR ZENITH ANGLE =   81.1   AT  549. ON  6/21
 SIGHT PATH IS AT GROUND LEVEL

 THETA ALPHA  RP/RV0    RV  %REDUCED    YCAP       L       X       Y DELYCAP    DELL  C(550)  BRATIO    DELX    DELY  E(LUV)  E(LAB)

   13.
         16.    0.19    49.5    0.01  311.37  153.32  0.4104  0.3990    0.03    0.01  0.0001  1.0000  0.0000  0.0000  0.0079  0.0074
0
                         CONCENTRATIONS OF AEROSOL AND GASES CONTRIBUTED BY

                                   Hyperion June

 DOWNWIND DISTANCE (KM) =   10.0
 PLUME ALTITUDE (M)     =   147.
 SIGMA Y (M)            =   280.
 SIGMA Z (M)            =    47.
 SO2-SO4 CONVERSION RATE=      0.0004 PERCENT/HR
 NOX-NO3 CONVERSION RATE=      0.0028 PERCENT/HR

 ALTITUDE         NOX       NO2       NO3-  NO2/NTOT  NO3-/NTOT     SO2       SO4=  SO4=/STOT     O3     PRIMARY BSP-TOTAL  BSPSN/BSP
                (PPM)     (PPM)     (PPM)  (MOLE %)  (MOLE %)     (PPM)   (UG/M3)  (MOLE %)     (PPM)   (UG/M3) (10-4 M-1)   (%)

  H+2S
 INCREMENT:     0.014     0.012     0.000    88.265     0.070     0.007     0.003     0.011    -0.012    22.645     0.237     0.198
 TOTAL AMB:     0.020     0.018     2.250     0.808    99.113     0.015     2.253     3.655     0.068    27.895     0.913    36.454

  H+1S
 INCREMENT:     0.063     0.051     0.000    80.251     0.002     0.032     0.001     0.001    -0.050   101.487     1.061     0.011
 TOTAL AMB:     0.069     0.057     2.250     2.447    97.006     0.040     2.251     1.415     0.030   106.737     1.737    19.147

  H
 INCREMENT:     0.105     0.068     0.000    65.036     0.001     0.053     0.001     0.000    -0.067   167.324     1.749     0.005
 TOTAL AMB:     0.111     0.074     2.250     3.130    95.315     0.061     2.251     0.936     0.013   172.574     2.425    13.712

  H-1S
 INCREMENT:     0.063     0.051     0.000    80.251     0.002     0.032     0.001     0.001    -0.050   101.487     1.061     0.011
 TOTAL AMB:     0.069     0.057     2.250     2.447    97.006     0.040     2.251     1.415     0.030   106.737     1.737    19.147
```

```
  H-2S
 INCREMENT:     0.014     0.013     0.000    88.265     0.070     0.007     0.003     0.011    -0.012    22.665     0.237     0.198
 TOTAL AMB:     0.020     0.018     2.250     0.809    99.112     0.015     2.253     3.654     0.068    27.915     0.914    36.446

   0
 INCREMENT:     0.002     0.001     0.000    71.180     1.085     0.001     0.005     0.167    -0.001     2.552     0.027     2.833
 TOTAL AMB:     0.008     0.007     2.250     0.310    99.664     0.009     2.255     6.127     0.079     7.802     0.704    47.363




 CUMULATIVE SURFACE DEPOSITION (MOLE FRACTIONOF INITIAL FLUX


                 SO2:    0.0000
                 NOX:    0.0000
 PRIMARY PARTICULATE:    0.0000
                 SO4:    0.0000
                 NO3:    0.0000
0
                    VISUAL EFFECTS FOR HORIZONTAL SIGHT PATHS
                    Hyperion June

 DOWNWIND DISTANCE (KM) =   10.0
 PLUME ALTITUDE (M)     =   147.
 PLUME-OBSERVER DISTANCE (KM) =    4.6
 AZIMUTH OF LINE-OF-SIGHT =   73.0
 ELEVATION ANGLE OF LINE-OF-SIGHT =    1.8
 SOLAR ZENITH ANGLE =   81.1   AT  549. ON  6/21
 SIGHT PATH IS THROUGH PLUME CENTER

 THETA ALPHA  RP/RV0    RV  %REDUCED    YCAP       L       X       Y DELYCAP    DELL  C(550)  BRATIO    DELX    DELY  E(LUV)  E(LAB)

   10.
         33.    0.09    44.7    9.76  383.96  165.56  0.4199  0.4042   47.17    7.75  0.1322  0.8233  0.0087  0.0045 14.4926 12.2740
0
                    VISUAL EFFECTS FOR HORIZONTAL SIGHT PATHS
                    Hyperion June

 DOWNWIND DISTANCE (KM) =   10.0
 PLUME ALTITUDE (M)     =   147.
 PLUME-OBSERVER DISTANCE (KM) =    4.6
 AZIMUTH OF LINE-OF-SIGHT =   73.0
 ELEVATION ANGLE OF LINE-OF-SIGHT =    1.8
 SOLAR ZENITH ANGLE =   81.1   AT  549. ON  6/21
 SIGHT PATH IS AT GROUND LEVEL

 THETA ALPHA  RP/RV0    RV  %REDUCED    YCAP       L       X       Y DELYCAP    DELL  C(550)  BRATIO    DELX    DELY  E(LUV)  E(LAB)

   10.
         33.    0.09    49.4    0.16  337.61  157.95  0.4113  0.3997    0.82    0.14  0.0023  0.9965  0.0002  0.0001  0.2578  0.2181
0
                         CONCENTRATIONS OF AEROSOL AND GASES CONTRIBUTED BY

                                   Hyperion June

 DOWNWIND DISTANCE (KM) =   13.0
 PLUME ALTITUDE (M)     =   147.
 SIGMA Y (M)            =   351.
 SIGMA Z (M)            =    52.
 SO2-SO4 CONVERSION RATE=      0.0020 PERCENT/HR
 NOX-NO3 CONVERSION RATE=      0.0143 PERCENT/HR
```

ALTITUDE	NOX (PPM)	NO2 (PPM)	NO3- (PPM)	NO2/NTOT (MOLE %)	NO3-/NTOT (MOLE %)	SO2 (PPM)	SO4= (UG/M3)	SO4=/STOT (MOLE %)	O3 (PPM)	PRIMARY (UG/M3)	BSP-TOTAL (10-4 M-1)	BSPSN/BSP (%)
H+2S												
INCREMENT:	0.010	0.009	0.000	87.775	0.129	0.005	0.004	0.020	-0.009	16.269	0.171	0.350
TOTAL AMB:	0.016	0.015	2.250	0.652	99.287	0.013	2.254	4.193	0.071	21.519	0.847	39.333
H+1S												
INCREMENT:	0.046	0.039	0.000	84.830	0.014	0.023	0.002	0.002	-0.038	72.912	0.762	0.042
TOTAL AMB:	0.052	0.045	2.250	1.934	97.759	0.031	2.252	1.820	0.042	78.162	1.439	23.133
H												
INCREMENT:	0.075	0.057	0.000	76.487	0.004	0.038	0.001	0.001	-0.057	120.211	1.257	0.014
TOTAL AMB:	0.081	0.063	2.250	2.717	96.519	0.046	2.251	1.235	0.023	125.461	1.933	17.211
H-1S												
INCREMENT:	0.046	0.039	0.000	84.829	0.014	0.023	0.002	0.002	-0.038	72.914	0.762	0.042
TOTAL AMB:	0.052	0.045	2.250	1.934	97.759	0.031	2.252	1.820	0.042	78.164	1.439	23.133
H-2S												
INCREMENT:	0.010	0.009	0.000	87.796	0.129	0.005	0.004	0.020	-0.009	16.439	0.172	0.350
TOTAL AMB:	0.016	0.015	2.250	0.657	99.282	0.013	2.254	4.176	0.071	21.689	0.849	39.251
0												
INCREMENT:	0.003	0.002	0.000	80.229	0.679	0.001	0.006	0.103	-0.002	4.627	0.049	1.768
TOTAL AMB:	0.009	0.008	2.250	0.362	99.607	0.009	2.256	5.729	0.078	9.877	0.725	45.954

CUMULATIVE SURFACE DEPOSITION (MOLE FRACTIONOF INITIAL FLUX

SO2: 0.0000
NOX: 0.0000
PRIMARY PARTICULATE: 0.0000
SO4: 0.0000
NO3: 0.0000

0

VISUAL EFFECTS FOR HORIZONTAL SIGHT PATHS
Hyperion June

DOWNWIND DISTANCE (KM) = 13.0
PLUME ALTITUDE (M) = 147.
PLUME-OBSERVER DISTANCE (KM) = 2.6
AZIMUTH OF LINE-OF-SIGHT = 111.4
ELEVATION ANGLE OF LINE-OF-SIGHT = 3.2
SOLAR ZENITH ANGLE = 81.1 AT 549. ON 6/21
SIGHT PATH IS THROUGH PLUME CENTER

THETA	ALPHA	RP/RV0	RV	%REDUCED	YCAP	L	X	Y	DELYCAP	DELL	C(550)	BRATIO	DELX	DELY	E(LUV)	E(LAB)
45.																
	71.	0.05	48.1	2.97	131.13	110.96	0.3919	0.3865	-2.45	-0.79	-0.0183	0.9541	0.0027	0.0023	2.4235	2.0981

0

VISUAL EFFECTS FOR HORIZONTAL SIGHT PATHS
Hyperion June

DOWNWIND DISTANCE (KM) = 13.0
PLUME ALTITUDE (M) = 147.
PLUME-OBSERVER DISTANCE (KM) = 2.6
AZIMUTH OF LINE-OF-SIGHT = 111.4

```
 ELEVATION ANGLE OF LINE-OF-SIGHT =    3.2
 SOLAR ZENITH ANGLE =   81.1   AT  549. ON  6/21
 SIGHT PATH IS AT GROUND LEVEL

 THETA ALPHA  RP/RV0    RV  %REDUCED    YCAP       L       X       Y DELYCAP    DELL  C(550)  BRATIO    DELX    DELY  E(LUV)  E(LAB)

   45.
        71.    0.05    49.5    0.11  133.48  111.71  0.3893  0.3843   -0.10   -0.03 -0.0007  0.9981  0.0001  0.0001  0.0987  0.0852
0
 HISTORY OF PLUME PARCEL AT DOWNWIND DISTANCE =   1.0 KM


    PARCEL     LOCAL       SO2-TO-SO4= CONVERSION RATE (%/HR)       NOX-TO-HNO3 CONVERSION RATE (%/HR)
      AGE       TIME
      (HR)                 H+2S  H+1S  H     H-1S  H-2S   0         H+2S  H+1S  H     H-1S  H-2S   0

       0.1       548       0.00  0.00  0.00  0.00  0.00  0.00       0.00  0.00  0.00  0.00  0.00  0.00
0
 HISTORY OF PLUME PARCEL AT DOWNWIND DISTANCE =   2.5 KM


    PARCEL     LOCAL       SO2-TO-SO4= CONVERSION RATE (%/HR)       NOX-TO-HNO3 CONVERSION RATE (%/HR)
      AGE       TIME
      (HR)                 H+2S  H+1S  H     H-1S  H-2S   0         H+2S  H+1S  H     H-1S  H-2S   0

       0.1       537       0.00  0.00  0.00  0.00  0.00  0.00       0.00  0.00  0.00  0.00  0.00  0.00
       0.3       548       0.00  0.00  0.00  0.00  0.00  0.18       0.00  0.00  0.00  0.00  0.00  1.27
0
 HISTORY OF PLUME PARCEL AT DOWNWIND DISTANCE =   5.0 KM


    PARCEL     LOCAL       SO2-TO-SO4= CONVERSION RATE (%/HR)       NOX-TO-HNO3 CONVERSION RATE (%/HR)
      AGE       TIME
      (HR)                 H+2S  H+1S  H     H-1S  H-2S   0         H+2S  H+1S  H     H-1S  H-2S   0

       0.1       518       0.00  0.00  0.00  0.00  0.00  0.00       0.00  0.00  0.00  0.00  0.00  0.00
       0.3       530       0.00  0.00  0.00  0.00  0.00  0.14       0.00  0.00  0.00  0.00  0.00  1.01
       0.6       548       0.00  0.00  0.00  0.00  0.00  0.18       0.03  0.00  0.00  0.00  0.03  1.27
0
 HISTORY OF PLUME PARCEL AT DOWNWIND DISTANCE =  10.0 KM


    PARCEL     LOCAL       SO2-TO-SO4= CONVERSION RATE (%/HR)       NOX-TO-HNO3 CONVERSION RATE (%/HR)
      AGE       TIME
      (HR)                 H+2S  H+1S  H     H-1S  H-2S   0         H+2S  H+1S  H     H-1S  H-2S   0

       0.1       440       0.00  0.00  0.00  0.00  0.00  0.00       0.00  0.00  0.00  0.00  0.00  0.00
       0.3       452       0.00  0.00  0.00  0.00  0.00  0.09       0.00  0.00  0.00  0.00  0.00  0.60
       0.6       511       0.00  0.00  0.00  0.00  0.00  0.12       0.02  0.00  0.00  0.00  0.02  0.85
       1.3       548       0.02  0.00  0.00  0.00  0.02  0.18       0.12  0.01  0.00  0.01  0.12  1.25
0
 HISTORY OF PLUME PARCEL AT DOWNWIND DISTANCE =  13.0 KM


    PARCEL     LOCAL       SO2-TO-SO4= CONVERSION RATE (%/HR)       NOX-TO-HNO3 CONVERSION RATE (%/HR)
      AGE       TIME
      (HR)                 H+2S  H+1S  H     H-1S  H-2S   0         H+2S  H+1S  H     H-1S  H-2S   0

       0.1       418       0.00  0.00  0.00  0.00  0.00  0.00       0.00  0.00  0.00  0.00  0.00  0.00
       0.3       429       0.00  0.00  0.00  0.00  0.00  0.02       0.00  0.00  0.00  0.00  0.00  0.14
       0.6       448       0.00  0.00  0.00  0.00  0.00  0.03       0.00  0.00  0.00  0.00  0.00  0.18
       1.3       526       0.01  0.00  0.00  0.00  0.01  0.06       0.04  0.00  0.00  0.00  0.04  0.43
       1.6       548       0.04  0.01  0.00  0.01  0.04  0.14       0.31  0.04  0.01  0.04  0.31  0.97
1                                                     PLOT FILE VERIFICATION
```

```
0                                                        OBSERVER-BASED DATA
0     SKY BACKGROUND
      For ground level if calculations done for both plume centerline and ground level.
0         NX             1      2      3      4      5
0   DISTANCE (KM)       1.     3.     5.    10.    13.
0 REDUCTION OF VISUAL
      RANGE (%)       0.000  0.000  0.006  0.159  0.114
0  BLUE-RED RATIO
                      1.000  1.000  1.000  0.996  0.998
0  PLUME CONTRAST AT
     0.55 MICRONS     0.000  0.000  0.000  0.002 -0.001
0PLUME PERCEPTIBILITY
   DELTA E(L*A*B*)    0.003  0.006  0.007  0.218  0.085

0   WHITE BACKGROUND
0         NX             1      2      3      4      5
0   DISTANCE (KM)       1.     3.     5.    10.    13.
0 REDUCTION OF VISUAL
      RANGE (%)       0.000  0.000  0.000  0.000  0.000
0  BLUE-RED RATIO
                      0.000  0.000  0.000  0.000  0.000
0  PLUME CONTRAST AT
     0.55 MICRONS
  EYE ACCOMODATED TO
       BACKGROUND     0.000  0.000  0.000  0.000  0.000
  EYE ACCOMODATED TO
       SKY            0.000  0.000  0.000  0.000  0.000
0PLUME PERCEPTIBILITY
   DELTA E(L*A*B*)    0.000  0.000  0.000  0.000  0.000

0    GRAY BACKGROUND
0         NX             1      2      3      4      5
0   DISTANCE (KM)       1.     3.     5.    10.    13.
0 REDUCTION OF VISUAL
      RANGE (%)       0.000  0.000  0.000  0.000  0.000
0  BLUE-RED RATIO
                      0.000  0.000  0.000  0.000  0.000
0  PLUME CONTRAST AT
     0.55 MICRONS
  EYE ACCOMODATED TO
       BACKGROUND     0.000  0.000  0.000  0.000  0.000
  EYE ACCOMODATED TO
       SKY            0.000  0.000  0.000  0.000  0.000
0PLUME PERCEPTIBILITY
   DELTA E(L*A*B*)    0.000  0.000  0.000  0.000  0.000
1   BLACK BACKGROUND
0         NX             1      2      3      4      5
0   DISTANCE (KM)       1.     3.     5.    10.    13.
0 REDUCTION OF VISUAL
      RANGE (%)       0.000  0.000  0.000  0.000  0.000
0  BLUE-RED RATIO
                      0.000  0.000  0.000  0.000  0.000
0  PLUME CONTRAST AT
     0.55 MICRONS
  EYE ACCOMODATED TO
       BACKGROUND     0.000  0.000  0.000  0.000  0.000
  EYE ACCOMODATED TO
       SKY            0.000  0.000  0.000  0.000  0.000
0PLUME PERCEPTIBILITY
   DELTA E(L*A*B*)    0.000  0.000  0.000  0.000  0.000
```

```
1                          PLUVUE II (VERSION 96170)
                        AN AIR QUALITY DISPERSION MODEL IN
                            THE OTHER MODELS SECTION
                     EPA SUPPORT CENTER FOR REGULATORY AIR MODELS

0
 VISUAL IMPACT ASSESSMENT FOR Hyperion September


     EMISSIONS SOURCE DATA

          ELEVATION OF SITE =      1220.  FEET MSL
                                    372.  METERS MSL

          NO. OF UNITS =     1.

          STACK HEIGHT =  160.  FEET
                           49.  METERS

          FLUE GAS FLOW RATE =    168757.  CU FT/MIN
                                    79.63  CU M/SEC

          FLUE GAS TEMPERATURE =       426.  F
                                       492.  K

          FLUE GAS OXYGEN CONTENT =        3.0  MOL PERCENT

          SO2 EMISSION RATE (TOTAL) =       2.34  TONS/DAY
                                         2.457E+01  G/SEC

          NOX EMISSION RATE (TOTAL,AS NO2) =       3.34  TONS/DAY
                                              3.507E+01  G/SEC

          PARTICULATE EMISSION RATE (TOTAL) =       2.84  TONS/DAY
                                              2.982E+01  G/SEC

0



     METEOROLOGICAL AND AMBIENT AIR QUALITY DATA

          WINDSPEED =   2.2  MILES/HR
                        1.0  M/SEC

          PASQUILL-GIFFORD-TURNER STABILITY CATEGORY F

          LAPSE RATE = 13.82  F/1000 FT
                         2.519E-02  K/M

          POTENTIAL TEMPERATURE LAPSE RATE =    3.499E-02  K/M

          AMBIENT TEMPERATURE =  62.0  F
                                289.8  K

          RELATIVE HUMIDITY =  80.0  %

          MIXING DEPTH =        0.0  M

          AMBIENT PRESSURE =  0.96  ATM

          BACKGROUND NOX CONCENTRATION =      0.006  PPM

          BACKGROUND NO2 CONCENTRATION =      0.006  PPM
```

```
         BACKGROUND OZONE CONCENTRATION =      0.080  PPM

         BACKGROUND SO2 CONCENTRATION =      0.008  PPM

  ROG =  0.1500        SIGMA =  2.0000        REFRACTIVE INDEX = 1.5000 +  0.000000
 LOG-NORMAL SIZE DISTRIBUTION (101 POINT HISTOGRAM)
  ROG =  3.0000        SIGMA =  2.2000        REFRACTIVE INDEX = 1.5000 +  0.000000
 LOG-NORMAL SIZE DISTRIBUTION (101 POINT HISTOGRAM)
  ROG =  1.0000        SIGMA =  2.0000        REFRACTIVE INDEX = 1.5000 +  0.000000
 LOG-NORMAL SIZE DISTRIBUTION (101 POINT HISTOGRAM)
  ROG =  0.0500        SIGMA =  2.0000        REFRACTIVE INDEX = 2.0000 +  1.000000
 LOG-NORMAL SIZE DISTRIBUTION (101 POINT HISTOGRAM)


         BACKGROUND COARSE MODE CONCENTRATION =        3.0  UG/M3

         BACKGROUND SULFATE CONCENTRATION =        2.3  UG/M3

         BACKGROUND NITRATE CONCENTRATION =        2.3  UG/M3

         BACKGROUND VISUAL RANGE =       54.9  KILOMETERS

         SO2 DEPOSITION VELOCITY =       1.00  CM/SEC

         NOX DEPOSITION VELOCITY =       1.00  CM/SEC

         COARSE PARTICULATE DEPOSITION VELOCITY =       0.10  CM/SEC

         SUBMICRON PARTICULATE DEPOSITION VELOCITY =       0.10  CM/SEC


                                  AEROSOL STATISTICS

                               BACKGROUND                                PLUME

                      ACCUMULATION          COARSE          ACCUMULATION          COARSE          CARBONACEOUS
         MASS MEDIAN       MODE               MODE               MODE               MODE               AEROSOLS
         RADIUS
         MICROMETERS         0.150              3.000              0.100              1.000              0.050

         GEOMETRIC
         STANDARD
         DEVIATION           2.000              2.200              2.000              2.000              2.000

         PARTICLE
         DENSITY
         G/(CM**3)           1.500              2.500              1.500              2.500              2.000

 CARBONACEOUS FRACTION OF PARTICLATE MASS EMISSIONS =      0.000

 BACKGROUND ATMOSPHERIC ELEMENTAL CARBON =      0.020 UG/M**3

0


     GEOMETRY OF USER-SPECIFIED PLUME-OBSERVER-SUN ORIENTATION


         WIND DIRECTION (DEGREES) = 40.0
```

SIMULATION IS FOR 713. HOURS ON 9/21

SOLAR ZENITH ANGLE (DEGREES) = 79.6

SOLAR AZIMUTH ANGLE (DEGREES) = 98.6

GEOMETRIES FOR LINES-OF-SIGHT THROUGH PLUME PARCELS AT GIVEN DOWNWIND DISTANCES (X)

X (KM)	AZIMUTH	RP	ALPHA	BETA	THETA
1.0	51.0	13.1	11.0	0.6	48.3
2.5	52.4	11.6	12.4	0.7	46.9
5.0	55.7	9.2	15.7	0.9	43.6
10.0	73.0	4.6	33.0	1.8	26.8
13.0	111.4	2.6	71.4	3.2	14.6

1 BACKGROUND CONDITIONS

ACCUMULATION MODE			COARSE PARTICLE MODE			PRIMARY PARTICLE MODE		
MASS RADIUS	SIGMA	BSCAT.55/MASS	MASS RADIUS	SIGMA	BSCAT.55/MASS	MASS RADIUS	SIGMA	BSCAT.55/MASS
0.1500E+00	0.2000E+01	0.1307E-01	0.3000E+01	0.2200E+01	0.3219E-03	0.1000E+01	0.2000E+01	0.1045E-02

REFRACTION INDEXES

ACCUMULATION MODE = 0.1500E+01 + I 0.0000E+00

COARSE MODE = 0.1500E+01 + I 0.0000E+00

PRIMARY AEROSOLS = 0.1500E+01 + I 0.0000E+00

CARBONACEOUS AEROSOLS = 0.2000E+01 + I 0.1000E+01

COEFFICIENTS AT 0.55 MICROMETERS , 1./KM

BTARAY =0.1119E-01 BTAAER =0.5994E-01 ABSNO2 =0.1798E-02 BTABAC =0.7130E-01

0

CONCENTRATIONS OF AEROSOL AND GASES CONTRIBUTED BY

Hyperion September

DOWNWIND DISTANCE (KM) = 1.0
PLUME ALTITUDE (M) = 147.
SIGMA Y (M) = 46.
SIGMA Z (M) = 17.
SO2-SO4 CONVERSION RATE= 0.0000 PERCENT/HR
NOX-NO3 CONVERSION RATE= 0.0000 PERCENT/HR

ALTITUDE	NOX (PPM)	NO2 (PPM)	NO3- (PPM)	NO2/NTOT (MOLE %)	NO3-/NTOT (MOLE %)	SO2 (PPM)	SO4= (UG/M3)	SO4=/STOT (MOLE %)	O3 (PPM)	PRIMARY (UG/M3)	BSP-TOTAL (10-4 M-1)	BSPSN/BSP (%)
H+2S												
INCREMENT:	0.233	0.077	0.000	32.847	0.000	0.118	0.000	0.000	-0.076	373.306	3.902	0.000
TOTAL AMB:	0.239	0.082	2.250	3.312	90.385	0.126	2.250	0.455	0.004	378.556	4.502	6.534
H+1S												
INCREMENT:	1.046	0.082	0.000	7.798	0.000	0.527	0.000	0.000	-0.079	1673.038	17.488	0.000
TOTAL AMB:	1.052	0.087	2.250	2.646	68.145	0.535	2.250	0.107	0.001	1678.288	18.088	1.626

```
  H
 INCREMENT:     1.724     0.083     0.000     4.829     0.000     0.868     0.000     0.000    -0.080  2758.375    28.833     0.000
 TOTAL AMB:     1.730     0.089     2.250     2.238    56.530     0.876     2.250     0.065     0.000  2763.625    29.432     0.999

  H-1S
 INCREMENT:     1.046     0.082     0.000     7.798     0.000     0.527     0.000     0.000    -0.079  1673.038    17.488     0.000
 TOTAL AMB:     1.052     0.087     2.250     2.646    68.145     0.535     2.250     0.107     0.001  1678.288    18.088     1.626

  H-2S
 INCREMENT:     0.233     0.077     0.000    32.847     0.000     0.118     0.000     0.000    -0.076   373.305     3.902     0.000
 TOTAL AMB:     0.239     0.082     2.250     3.312    90.385     0.126     2.250     0.455     0.004   378.555     4.502     6.534

   0
 INCREMENT:     0.000     0.000     0.000     0.000     0.000     0.000     0.000     0.000     0.000     0.000     0.000     0.000
 TOTAL AMB:     0.006     0.005     2.250     0.244    99.734     0.008     2.250     6.685     0.080     5.250     0.599    49.066



 CUMULATIVE SURFACE DEPOSITION (MOLE FRACTIONOF INITIAL FLUX


                SO2:    0.0000
                NOX:    0.0000
 PRIMARY PARTICULATE:    0.0000
                SO4:    0.0000
                NO3:    0.0000
0
                   VISUAL EFFECTS FOR HORIZONTAL SIGHT PATHS
                   Hyperion September

 DOWNWIND DISTANCE (KM) =    1.0
 PLUME ALTITUDE (M)     =   147.
 PLUME-OBSERVER DISTANCE (KM) =   13.1
 AZIMUTH OF LINE-OF-SIGHT =   51.0
 ELEVATION ANGLE OF LINE-OF-SIGHT =    0.6
 SOLAR ZENITH ANGLE =   79.6   AT  713. ON  9/21
 SIGHT PATH IS THROUGH PLUME CENTER

 THETA ALPHA  RP/RV0    RV  %REDUCED    YCAP       L       X       Y DELYCAP    DELL  C(550)  BRATIO    DELX    DELY  E(LUV)  E(LAB)

   48.
        11.    0.24    30.3   44.85  111.43  104.26  0.3750  0.3780   -3.08   -1.10 -0.0224  1.0529 -0.0026 -0.0005  2.4824  1.7539
0
                   VISUAL EFFECTS FOR HORIZONTAL SIGHT PATHS
                   Hyperion September

 DOWNWIND DISTANCE (KM) =    1.0
 PLUME ALTITUDE (M)     =   147.
 PLUME-OBSERVER DISTANCE (KM) =   13.1
 AZIMUTH OF LINE-OF-SIGHT =   51.0
 ELEVATION ANGLE OF LINE-OF-SIGHT =    0.6
 SOLAR ZENITH ANGLE =   79.6   AT  713. ON  9/21
 SIGHT PATH IS AT GROUND LEVEL

 THETA ALPHA  RP/RV0    RV  %REDUCED    YCAP       L       X       Y DELYCAP    DELL  C(550)  BRATIO    DELX    DELY  E(LUV)  E(LAB)

   48.
        11.    0.24    54.9    0.00  114.52  105.36  0.3775  0.3785    0.00    0.00  0.0000  1.0000  0.0000  0.0000  0.0033  0.0024
0
                         CONCENTRATIONS OF AEROSOL AND GASES CONTRIBUTED BY

                                   Hyperion September
```

```
 DOWNWIND DISTANCE (KM) =    2.5
 PLUME ALTITUDE (M)     =   147.
 SIGMA Y (M)            =    89.
 SIGMA Z (M)            =    26.
 SO2-SO4 CONVERSION RATE=      0.0000 PERCENT/HR
 NOX-NO3 CONVERSION RATE=      0.0002 PERCENT/HR
```

ALTITUDE	NOX (PPM)	NO2 (PPM)	NO3- (PPM)	NO2/NTOT (MOLE %)	NO3-/NTOT (MOLE %)	SO2 (PPM)	SO4= (UG/M3)	SO4=/STOT (MOLE %)	O3 (PPM)	PRIMARY (UG/M3)	BSP-TOTAL (10-4 M-1)	BSPSN/BSP (%)
H+2S												
INCREMENT:	0.078	0.058	0.000	73.725	0.000	0.040	0.000	0.000	-0.058	125.473	1.312	0.001
TOTAL AMB:	0.084	0.064	2.250	2.725	96.383	0.048	2.250	1.192	0.022	130.723	1.911	15.392
H+1S												
INCREMENT:	0.351	0.080	0.000	22.655	0.000	0.177	0.000	0.000	-0.078	562.332	5.878	0.000
TOTAL AMB:	0.357	0.085	2.250	3.276	86.290	0.185	2.250	0.309	0.002	567.582	6.477	4.541
H												
INCREMENT:	0.580	0.083	0.000	14.362	0.000	0.292	0.000	0.000	-0.079	927.128	9.691	0.000
TOTAL AMB:	0.586	0.089	2.250	3.140	79.350	0.300	2.250	0.191	0.001	932.378	10.291	2.858
H-1S												
INCREMENT:	0.351	0.080	0.000	22.655	0.000	0.177	0.000	0.000	-0.078	562.332	5.878	0.000
TOTAL AMB:	0.357	0.085	2.250	3.276	86.290	0.185	2.250	0.309	0.002	567.582	6.477	4.541
H-2S												
INCREMENT:	0.078	0.058	0.000	73.725	0.000	0.040	0.000	0.000	-0.058	125.473	1.312	0.001
TOTAL AMB:	0.084	0.064	2.250	2.725	96.383	0.048	2.250	1.192	0.022	130.723	1.911	15.392
0												
INCREMENT:	0.000	0.000	0.000	0.000	0.229	0.000	0.000	0.036	0.000	0.000	0.000	0.550
TOTAL AMB:	0.006	0.005	2.250	0.244	99.734	0.008	2.250	6.685	0.080	5.250	0.599	49.065

```
 CUMULATIVE SURFACE DEPOSITION (MOLE FRACTIONOF INITIAL FLUX

                 SO2:    0.0000
                 NOX:    0.0000
 PRIMARY PARTICULATE:    0.0000
                 SO4:    0.0000
                 NO3:    0.0000
0
                    VISUAL EFFECTS FOR HORIZONTAL SIGHT PATHS
                    Hyperion September

 DOWNWIND DISTANCE (KM) =    2.5
 PLUME ALTITUDE (M)     =   147.
 PLUME-OBSERVER DISTANCE (KM) =   11.6
 AZIMUTH OF LINE-OF-SIGHT =   52.4
 ELEVATION ANGLE OF LINE-OF-SIGHT =    0.7
 SOLAR ZENITH ANGLE =   79.6   AT  713. ON  9/21
 SIGHT PATH IS THROUGH PLUME CENTER
```

THETA	ALPHA	RP/RV0	RV	%REDUCED	YCAP	L	X	Y	DELYCAP	DELL	C(550)	BRATIO	DELX	DELY	E(LUV)	E(LAB)
47.																
	12.	0.21	40.4	26.34	114.59	105.38	0.3783	0.3799	-3.52	-1.23	-0.0268	1.0214	-0.0005	0.0005	1.4605	1.3184

0

VISUAL EFFECTS FOR HORIZONTAL SIGHT PATHS
Hyperion September

DOWNWIND DISTANCE (KM) = 2.5
PLUME ALTITUDE (M) = 147.
PLUME-OBSERVER DISTANCE (KM) = 11.6
AZIMUTH OF LINE-OF-SIGHT = 52.4
ELEVATION ANGLE OF LINE-OF-SIGHT = 0.7
SOLAR ZENITH ANGLE = 79.6 AT 713. ON 9/21
SIGHT PATH IS AT GROUND LEVEL

THETA	ALPHA	RP/RV0	RV	%REDUCED	YCAP	L	X	Y	DELYCAP	DELL	C(550)	BRATIO	DELX	DELY	E(LUV)	E(LAB)
47.																
	12.	0.21	54.9	0.00	118.12	106.61	0.3788	0.3794	0.00	0.00	0.0000	1.0001	0.0000	0.0000	0.0067	0.0050

0

CONCENTRATIONS OF AEROSOL AND GASES CONTRIBUTED BY

Hyperion September

DOWNWIND DISTANCE (KM) = 5.0
PLUME ALTITUDE (M) = 147.
SIGMA Y (M) = 156.
SIGMA Z (M) = 35.
SO2-SO4 CONVERSION RATE= 0.0001 PERCENT/HR
NOX-NO3 CONVERSION RATE= 0.0009 PERCENT/HR

ALTITUDE	NOX (PPM)	NO2 (PPM)	NO3- (PPM)	NO2/NTOT (MOLE %)	NO3-/NTOT (MOLE %)	SO2 (PPM)	SO4= (UG/M3)	SO4=/STOT (MOLE %)	O3 (PPM)	PRIMARY (UG/M3)	BSP-TOTAL (10-4 M-1)	BSPSN/BSP (%)
H+2S												
INCREMENT:	0.033	0.029	0.000	85.879	0.007	0.017	0.001	0.001	-0.029	53.491	0.559	0.021
TOTAL AMB:	0.039	0.035	2.250	1.508	98.278	0.025	2.251	2.256	0.051	58.741	1.159	25.394
H+1S												
INCREMENT:	0.150	0.073	0.000	49.034	0.000	0.075	0.000	0.000	-0.072	239.731	2.506	0.001
TOTAL AMB:	0.156	0.079	2.250	3.295	93.522	0.083	2.250	0.682	0.008	244.981	3.105	9.472
H												
INCREMENT:	0.247	0.079	0.000	31.958	0.000	0.124	0.000	0.000	-0.076	395.250	4.132	0.001
TOTAL AMB:	0.253	0.085	2.250	3.386	89.890	0.132	2.250	0.431	0.004	400.500	4.731	6.217
H-1S												
INCREMENT:	0.150	0.073	0.000	49.034	0.000	0.075	0.000	0.000	-0.072	239.731	2.506	0.001
TOTAL AMB:	0.156	0.079	2.250	3.295	93.522	0.083	2.250	0.682	0.008	244.981	3.105	9.472
H-2S												
INCREMENT:	0.033	0.029	0.000	85.879	0.007	0.017	0.001	0.001	-0.029	53.491	0.559	0.021
TOTAL AMB:	0.039	0.035	2.250	1.508	98.278	0.025	2.251	2.256	0.051	58.741	1.159	25.394
0												
INCREMENT:	0.000	0.000	0.000	0.000	0.546	0.000	0.000	0.085	0.000	0.139	0.001	1.296
TOTAL AMB:	0.006	0.006	2.250	0.247	99.730	0.008	2.250	6.652	0.080	5.389	0.601	48.948

CUMULATIVE SURFACE DEPOSITION (MOLE FRACTIONOF INITIAL FLUX

SO2: 0.0000
NOX: 0.0000
PRIMARY PARTICULATE: 0.0000

```
                 SO4:    0.0000
                 NO3:    0.0000
0
                    VISUAL EFFECTS FOR HORIZONTAL SIGHT PATHS
                    Hyperion September

 DOWNWIND DISTANCE (KM) =    5.0
 PLUME ALTITUDE (M)     =   147.
 PLUME-OBSERVER DISTANCE (KM) =    9.2
 AZIMUTH OF LINE-OF-SIGHT =   55.7
 ELEVATION ANGLE OF LINE-OF-SIGHT =    0.9
 SOLAR ZENITH ANGLE =   79.6   AT  713. ON  9/21
 SIGHT PATH IS THROUGH PLUME CENTER

 THETA ALPHA  RP/RV0    RV  %REDUCED    YCAP       L       X       Y DELYCAP    DELL  C(550)  BRATIO    DELX    DELY  E(LUV)  E(LAB)

   44.
         16.    0.17    46.2   15.73  123.29  108.38  0.3836  0.3830   -4.17   -1.38 -0.0320  0.9846  0.0018  0.0017  2.0244  1.8664
0
                    VISUAL EFFECTS FOR HORIZONTAL SIGHT PATHS
                    Hyperion September

 DOWNWIND DISTANCE (KM) =    5.0
 PLUME ALTITUDE (M)     =   147.
 PLUME-OBSERVER DISTANCE (KM) =    9.2
 AZIMUTH OF LINE-OF-SIGHT =   55.7
 ELEVATION ANGLE OF LINE-OF-SIGHT =    0.9
 SOLAR ZENITH ANGLE =   79.6   AT  713. ON  9/21
 SIGHT PATH IS AT GROUND LEVEL

 THETA ALPHA  RP/RV0    RV  %REDUCED    YCAP       L       X       Y DELYCAP    DELL  C(550)  BRATIO    DELX    DELY  E(LUV)  E(LAB)

   44.
         16.    0.17    54.9    0.00  127.46  109.76  0.3818  0.3813    0.01    0.00  0.0000  1.0002  0.0000  0.0000  0.0098  0.0074
0
                         CONCENTRATIONS OF AEROSOL AND GASES CONTRIBUTED BY

                                   Hyperion September

 DOWNWIND DISTANCE (KM) =   10.0
 PLUME ALTITUDE (M)     =   147.
 SIGMA Y (M)            =   280.
 SIGMA Z (M)            =    47.
 SO2-SO4 CONVERSION RATE=      0.0005 PERCENT/HR
 NOX-NO3 CONVERSION RATE=      0.0033 PERCENT/HR

 ALTITUDE         NOX       NO2       NO3-  NO2/NTOT  NO3-/NTOT     SO2       SO4=  SO4=/STOT     O3     PRIMARY BSP-TOTAL  BSPSN/BSP
                (PPM)     (PPM)     (PPM)  (MOLE %)  (MOLE %)     (PPM)   (UG/M3)  (MOLE %)     (PPM)   (UG/M3) (10-4 M-1)   (%)

  H+2S
 INCREMENT:     0.014     0.012     0.000    87.433     0.074     0.007     0.003     0.012    -0.012    22.375     0.234     0.187
 TOTAL AMB:     0.020     0.018     2.250     0.794    99.120     0.015     2.253     3.675     0.068    27.625     0.834    35.329

  H+1S
 INCREMENT:     0.063     0.050     0.000    79.275     0.003     0.032     0.001     0.001    -0.049   100.278     1.048     0.011
 TOTAL AMB:     0.069     0.055     2.250     2.393    97.038     0.040     2.251     1.428     0.031   105.528     1.648    17.857

  H
 INCREMENT:     0.103     0.067     0.000    64.660     0.001     0.052     0.001     0.000    -0.066   165.331     1.728     0.005
 TOTAL AMB:     0.109     0.073     2.250     3.078    95.366     0.060     2.251     0.946     0.014   170.581     2.328    12.639

  H-1S
 INCREMENT:     0.063     0.050     0.000    79.275     0.003     0.032     0.001     0.001    -0.049   100.278     1.048     0.011
 TOTAL AMB:     0.069     0.055     2.250     2.393    97.038     0.040     2.251     1.428     0.031   105.528     1.648    17.857
```

```
  H-2S
 INCREMENT:     0.014     0.012     0.000    87.433     0.074     0.007     0.003     0.012    -0.012    22.395     0.235     0.187
 TOTAL AMB:     0.020     0.018     2.250     0.795    99.119     0.015     2.253     3.674     0.068    27.645     0.834    35.320

   0
 INCREMENT:     0.002     0.001     0.000    70.613     1.096     0.001     0.005     0.170    -0.001     2.495     0.027     2.564
 TOTAL AMB:     0.008     0.007     2.250     0.306    99.666     0.009     2.255     6.139     0.079     7.745     0.626    47.078




 CUMULATIVE SURFACE DEPOSITION (MOLE FRACTIONOF INITIAL FLUX


                 SO2:    0.0000
                 NOX:    0.0000
 PRIMARY PARTICULATE:    0.0000
                 SO4:    0.0000
                 NO3:    0.0000
0
                    VISUAL EFFECTS FOR HORIZONTAL SIGHT PATHS
                    Hyperion September

 DOWNWIND DISTANCE (KM) =   10.0
 PLUME ALTITUDE (M)     =   147.
 PLUME-OBSERVER DISTANCE (KM) =    4.6
 AZIMUTH OF LINE-OF-SIGHT =   73.0
 ELEVATION ANGLE OF LINE-OF-SIGHT =    1.8
 SOLAR ZENITH ANGLE =   79.6   AT  713. ON  9/21
 SIGHT PATH IS THROUGH PLUME CENTER

 THETA ALPHA  RP/RV0    RV  %REDUCED    YCAP       L       X       Y DELYCAP    DELL  C(550)  BRATIO    DELX    DELY  E(LUV)  E(LAB)

   27.
         33.    0.08    51.6    6.01  196.55  129.27  0.3988  0.3929   -3.22   -0.79 -0.0188  0.9223  0.0048  0.0030  4.5150  3.5131
0
                    VISUAL EFFECTS FOR HORIZONTAL SIGHT PATHS
                    Hyperion September

 DOWNWIND DISTANCE (KM) =   10.0
 PLUME ALTITUDE (M)     =   147.
 PLUME-OBSERVER DISTANCE (KM) =    4.6
 AZIMUTH OF LINE-OF-SIGHT =   73.0
 ELEVATION ANGLE OF LINE-OF-SIGHT =    1.8
 SOLAR ZENITH ANGLE =   79.6   AT  713. ON  9/21
 SIGHT PATH IS AT GROUND LEVEL

 THETA ALPHA  RP/RV0    RV  %REDUCED    YCAP       L       X       Y DELYCAP    DELL  C(550)  BRATIO    DELX    DELY  E(LUV)  E(LAB)

   27.
         33.    0.08    54.8    0.09  199.71  130.05  0.3941  0.3899   -0.05   -0.01 -0.0003  0.9987  0.0001  0.0001  0.0746  0.0580
0
                         CONCENTRATIONS OF AEROSOL AND GASES CONTRIBUTED BY

                                   Hyperion September

 DOWNWIND DISTANCE (KM) =   13.0
 PLUME ALTITUDE (M)     =   147.
 SIGMA Y (M)            =   351.
 SIGMA Z (M)            =    52.
 SO2-SO4 CONVERSION RATE=      0.0023 PERCENT/HR
 NOX-NO3 CONVERSION RATE=      0.0164 PERCENT/HR
```

ALTITUDE	NOX (PPM)	NO2 (PPM)	NO3- (PPM)	NO2/NTOT (MOLE %)	NO3-/NTOT (MOLE %)	SO2 (PPM)	SO4= (UG/M3)	SO4=/STOT (MOLE %)	O3 (PPM)	PRIMARY (UG/M3)	BSP-TOTAL (10-4 M-1)	BSPSN/BSP (%)
H+2S												
INCREMENT:	0.010	0.009	0.000	86.981	0.139	0.005	0.004	0.022	-0.009	16.076	0.169	0.338
TOTAL AMB:	0.016	0.015	2.250	0.642	99.292	0.013	2.254	4.212	0.071	21.326	0.768	38.369
H+1S												
INCREMENT:	0.045	0.038	0.000	83.815	0.015	0.023	0.002	0.003	-0.037	72.046	0.753	0.042
TOTAL AMB:	0.051	0.044	2.250	1.892	97.782	0.031	2.252	1.836	0.043	77.296	1.353	21.764
H												
INCREMENT:	0.074	0.056	0.000	75.629	0.004	0.037	0.001	0.001	-0.055	118.784	1.242	0.015
TOTAL AMB:	0.080	0.062	2.250	2.659	96.556	0.045	2.251	1.248	0.025	124.034	1.841	15.984
H-1S												
INCREMENT:	0.045	0.038	0.000	83.814	0.015	0.023	0.002	0.003	-0.037	72.049	0.753	0.042
TOTAL AMB:	0.051	0.044	2.250	1.893	97.782	0.031	2.252	1.836	0.043	77.299	1.353	21.763
H-2S												
INCREMENT:	0.010	0.009	0.000	87.001	0.139	0.005	0.004	0.022	-0.009	16.240	0.170	0.338
TOTAL AMB:	0.016	0.015	2.250	0.646	99.288	0.013	2.254	4.196	0.071	21.490	0.770	38.283
0												
INCREMENT:	0.003	0.002	0.000	79.492	0.772	0.001	0.007	0.118	-0.002	4.532	0.048	1.792
TOTAL AMB:	0.009	0.008	2.250	0.356	99.610	0.009	2.257	5.748	0.078	9.782	0.648	45.545

CUMULATIVE SURFACE DEPOSITION (MOLE FRACTIONOF INITIAL FLUX

SO2: 0.0000
NOX: 0.0000
PRIMARY PARTICULATE: 0.0000
SO4: 0.0000
NO3: 0.0000

0

VISUAL EFFECTS FOR HORIZONTAL SIGHT PATHS
Hyperion September

DOWNWIND DISTANCE (KM) = 13.0
PLUME ALTITUDE (M) = 147.
PLUME-OBSERVER DISTANCE (KM) = 2.6
AZIMUTH OF LINE-OF-SIGHT = 111.4
ELEVATION ANGLE OF LINE-OF-SIGHT = 3.2
SOLAR ZENITH ANGLE = 79.6 AT 713. ON 9/21
SIGHT PATH IS THROUGH PLUME CENTER

THETA	ALPHA	RP/RV0	RV	%REDUCED	YCAP	L	X	Y	DELYCAP	DELL	C(550)	BRATIO	DELX	DELY	E(LUV)	E(LAB)
15.																
	71.	0.05	52.6	4.13	288.31	149.04	0.4026	0.3963	8.88	1.71	0.0293	0.9055	0.0048	0.0029	5.8147	4.6014

0

VISUAL EFFECTS FOR HORIZONTAL SIGHT PATHS
Hyperion September

DOWNWIND DISTANCE (KM) = 13.0
PLUME ALTITUDE (M) = 147.
PLUME-OBSERVER DISTANCE (KM) = 2.6
AZIMUTH OF LINE-OF-SIGHT = 111.4

```
 ELEVATION ANGLE OF LINE-OF-SIGHT =    3.2
 SOLAR ZENITH ANGLE =   79.6   AT  713. ON  9/21
 SIGHT PATH IS AT GROUND LEVEL

 THETA ALPHA  RP/RV0    RV  %REDUCED    YCAP       L       X       Y DELYCAP    DELL  C(550)  BRATIO    DELX    DELY  E(LUV)  E(LAB)

   15.
        71.    0.05    54.8    0.16  279.79  147.40  0.3981  0.3935    0.36    0.07  0.0012  0.9960  0.0002  0.0001  0.2372  0.1871
0
 HISTORY OF PLUME PARCEL AT DOWNWIND DISTANCE =   1.0 KM


    PARCEL     LOCAL       SO2-TO-SO4= CONVERSION RATE (%/HR)       NOX-TO-HNO3 CONVERSION RATE (%/HR)
      AGE       TIME
      (HR)                 H+2S  H+1S  H     H-1S  H-2S   0         H+2S  H+1S  H     H-1S  H-2S   0

       0.1       713       0.00  0.00  0.00  0.00  0.00  0.00       0.00  0.00  0.00  0.00  0.00  0.00
0
 HISTORY OF PLUME PARCEL AT DOWNWIND DISTANCE =   2.5 KM


    PARCEL     LOCAL       SO2-TO-SO4= CONVERSION RATE (%/HR)       NOX-TO-HNO3 CONVERSION RATE (%/HR)
      AGE       TIME
      (HR)                 H+2S  H+1S  H     H-1S  H-2S   0         H+2S  H+1S  H     H-1S  H-2S   0

       0.1       701       0.00  0.00  0.00  0.00  0.00  0.00       0.00  0.00  0.00  0.00  0.00  0.00
       0.3       713       0.00  0.00  0.00  0.00  0.00  0.19       0.00  0.00  0.00  0.00  0.00  1.32
0
 HISTORY OF PLUME PARCEL AT DOWNWIND DISTANCE =   5.0 KM


    PARCEL     LOCAL       SO2-TO-SO4= CONVERSION RATE (%/HR)       NOX-TO-HNO3 CONVERSION RATE (%/HR)
      AGE       TIME
      (HR)                 H+2S  H+1S  H     H-1S  H-2S   0         H+2S  H+1S  H     H-1S  H-2S   0

       0.1       642       0.00  0.00  0.00  0.00  0.00  0.00       0.00  0.00  0.00  0.00  0.00  0.00
       0.3       654       0.00  0.00  0.00  0.00  0.00  0.13       0.00  0.00  0.00  0.00  0.00  0.94
       0.6       713       0.00  0.00  0.00  0.00  0.00  0.19       0.03  0.00  0.00  0.00  0.03  1.32
0
 HISTORY OF PLUME PARCEL AT DOWNWIND DISTANCE =  10.0 KM


    PARCEL     LOCAL       SO2-TO-SO4= CONVERSION RATE (%/HR)       NOX-TO-HNO3 CONVERSION RATE (%/HR)
      AGE       TIME
      (HR)                 H+2S  H+1S  H     H-1S  H-2S   0         H+2S  H+1S  H     H-1S  H-2S   0

       0.1       604       0.00  0.00  0.00  0.00  0.00  0.00       0.00  0.00  0.00  0.00  0.00  0.00
       0.3       616       0.00  0.00  0.00  0.00  0.00  0.09       0.00  0.00  0.00  0.00  0.00  0.64
       0.6       635       0.00  0.00  0.00  0.00  0.00  0.11       0.02  0.00  0.00  0.00  0.02  0.80
       1.3       713       0.02  0.00  0.00  0.00  0.02  0.19       0.13  0.01  0.00  0.01  0.13  1.30
0
 HISTORY OF PLUME PARCEL AT DOWNWIND DISTANCE =  13.0 KM


    PARCEL     LOCAL       SO2-TO-SO4= CONVERSION RATE (%/HR)       NOX-TO-HNO3 CONVERSION RATE (%/HR)
      AGE       TIME
      (HR)                 H+2S  H+1S  H     H-1S  H-2S   0         H+2S  H+1S  H     H-1S  H-2S   0

       0.1       542       0.00  0.00  0.00  0.00  0.00  0.00       0.00  0.00  0.00  0.00  0.00  0.00
       0.3       553       0.00  0.00  0.00  0.00  0.00  0.02       0.00  0.00  0.00  0.00  0.00  0.13
       0.6       612       0.00  0.00  0.00  0.00  0.00  0.04       0.00  0.00  0.00  0.00  0.00  0.28
       1.3       650       0.01  0.00  0.00  0.00  0.01  0.07       0.05  0.00  0.00  0.00  0.05  0.52
       1.6       713       0.05  0.01  0.00  0.01  0.05  0.15       0.32  0.05  0.02  0.05  0.32  1.02
1                                                     PLOT FILE VERIFICATION
```

```
0                                                        OBSERVER-BASED DATA
0     SKY BACKGROUND
      For ground level if calculations done for both plume centerline and ground level.
0         NX             1      2      3      4      5
0   DISTANCE (KM)       1.     3.     5.    10.    13.
0 REDUCTION OF VISUAL
      RANGE (%)       0.000  0.000  0.005  0.090  0.160
0  BLUE-RED RATIO
                      1.000  1.000  1.000  0.999  0.996
0  PLUME CONTRAST AT
     0.55 MICRONS     0.000  0.000  0.000  0.000  0.001
0PLUME PERCEPTIBILITY
   DELTA E(L*A*B*)    0.002  0.005  0.007  0.058  0.187

0   WHITE BACKGROUND
0         NX             1      2      3      4      5
0   DISTANCE (KM)       1.     3.     5.    10.    13.
0 REDUCTION OF VISUAL
      RANGE (%)       0.000  0.000  0.000  0.000  0.000
0  BLUE-RED RATIO
                      0.000  0.000  0.000  0.000  0.000
0  PLUME CONTRAST AT
     0.55 MICRONS
  EYE ACCOMODATED TO
       BACKGROUND     0.000  0.000  0.000  0.000  0.000
  EYE ACCOMODATED TO
       SKY            0.000  0.000  0.000  0.000  0.000
0PLUME PERCEPTIBILITY
   DELTA E(L*A*B*)    0.000  0.000  0.000  0.000  0.000

0    GRAY BACKGROUND
0         NX             1      2      3      4      5
0   DISTANCE (KM)       1.     3.     5.    10.    13.
0 REDUCTION OF VISUAL
      RANGE (%)       0.000  0.000  0.000  0.000  0.000
0  BLUE-RED RATIO
                      0.000  0.000  0.000  0.000  0.000
0  PLUME CONTRAST AT
     0.55 MICRONS
  EYE ACCOMODATED TO
       BACKGROUND     0.000  0.000  0.000  0.000  0.000
  EYE ACCOMODATED TO
       SKY            0.000  0.000  0.000  0.000  0.000
0PLUME PERCEPTIBILITY
   DELTA E(L*A*B*)    0.000  0.000  0.000  0.000  0.000
1   BLACK BACKGROUND
0         NX             1      2      3      4      5
0   DISTANCE (KM)       1.     3.     5.    10.    13.
0 REDUCTION OF VISUAL
      RANGE (%)       0.000  0.000  0.000  0.000  0.000
0  BLUE-RED RATIO
                      0.000  0.000  0.000  0.000  0.000
0  PLUME CONTRAST AT
     0.55 MICRONS
  EYE ACCOMODATED TO
       BACKGROUND     0.000  0.000  0.000  0.000  0.000
  EYE ACCOMODATED TO
       SKY            0.000  0.000  0.000  0.000  0.000
0PLUME PERCEPTIBILITY
   DELTA E(L*A*B*)    0.000  0.000  0.000  0.000  0.000
```

```
1                          PLUVUE II (VERSION 96170)
                        AN AIR QUALITY DISPERSION MODEL IN
                            THE OTHER MODELS SECTION
                     EPA SUPPORT CENTER FOR REGULATORY AIR MODELS

0
 VISUAL IMPACT ASSESSMENT FOR Hyperion December


     EMISSIONS SOURCE DATA

          ELEVATION OF SITE =      1220.  FEET MSL
                                    372.  METERS MSL

          NO. OF UNITS =     1.

          STACK HEIGHT =  160.  FEET
                           49.  METERS

          FLUE GAS FLOW RATE =    168757.  CU FT/MIN
                                    79.63  CU M/SEC

          FLUE GAS TEMPERATURE =       426.  F
                                       492.  K

          FLUE GAS OXYGEN CONTENT =        3.0  MOL PERCENT

          SO2 EMISSION RATE (TOTAL) =       2.34  TONS/DAY
                                         2.457E+01  G/SEC

          NOX EMISSION RATE (TOTAL,AS NO2) =       3.34  TONS/DAY
                                              3.507E+01  G/SEC

          PARTICULATE EMISSION RATE (TOTAL) =       2.84  TONS/DAY
                                              2.982E+01  G/SEC

0



     METEOROLOGICAL AND AMBIENT AIR QUALITY DATA

          WINDSPEED =   2.2  MILES/HR
                        1.0  M/SEC

          PASQUILL-GIFFORD-TURNER STABILITY CATEGORY F

          LAPSE RATE = 13.82  F/1000 FT
                         2.519E-02  K/M

          POTENTIAL TEMPERATURE LAPSE RATE =    3.499E-02  K/M

          AMBIENT TEMPERATURE =  19.0  F
                                265.9  K

          RELATIVE HUMIDITY =  76.0  %

          MIXING DEPTH =        0.0  M

          AMBIENT PRESSURE =  0.96  ATM

          BACKGROUND NOX CONCENTRATION =      0.006  PPM

          BACKGROUND NO2 CONCENTRATION =      0.006  PPM
```

```
         BACKGROUND OZONE CONCENTRATION =      0.080  PPM

         BACKGROUND SO2 CONCENTRATION =      0.008  PPM

  ROG =  0.1500        SIGMA =  2.0000        REFRACTIVE INDEX = 1.5000 +  0.000000
 LOG-NORMAL SIZE DISTRIBUTION (101 POINT HISTOGRAM)
  ROG =  3.0000        SIGMA =  2.2000        REFRACTIVE INDEX = 1.5000 +  0.000000
 LOG-NORMAL SIZE DISTRIBUTION (101 POINT HISTOGRAM)
  ROG =  1.0000        SIGMA =  2.0000        REFRACTIVE INDEX = 1.5000 +  0.000000
 LOG-NORMAL SIZE DISTRIBUTION (101 POINT HISTOGRAM)
  ROG =  0.0500        SIGMA =  2.0000        REFRACTIVE INDEX = 2.0000 +  1.000000
 LOG-NORMAL SIZE DISTRIBUTION (101 POINT HISTOGRAM)


         BACKGROUND COARSE MODE CONCENTRATION =        3.0  UG/M3

         BACKGROUND SULFATE CONCENTRATION =        2.3  UG/M3

         BACKGROUND NITRATE CONCENTRATION =        2.3  UG/M3

         BACKGROUND VISUAL RANGE =       64.6  KILOMETERS

         SO2 DEPOSITION VELOCITY =       1.00  CM/SEC

         NOX DEPOSITION VELOCITY =       1.00  CM/SEC

         COARSE PARTICULATE DEPOSITION VELOCITY =       0.10  CM/SEC

         SUBMICRON PARTICULATE DEPOSITION VELOCITY =       0.10  CM/SEC


                                  AEROSOL STATISTICS

                               BACKGROUND                                PLUME

                      ACCUMULATION          COARSE          ACCUMULATION          COARSE          CARBONACEOUS
         MASS MEDIAN       MODE               MODE               MODE               MODE               AEROSOLS
         RADIUS
         MICROMETERS         0.150              3.000              0.100              1.000              0.050

         GEOMETRIC
         STANDARD
         DEVIATION           2.000              2.200              2.000              2.000              2.000

         PARTICLE
         DENSITY
         G/(CM**3)           1.500              2.500              1.500              2.500              2.000

 CARBONACEOUS FRACTION OF PARTICLATE MASS EMISSIONS =      0.000

 BACKGROUND ATMOSPHERIC ELEMENTAL CARBON =      0.020 UG/M**3

0


     GEOMETRY OF USER-SPECIFIED PLUME-OBSERVER-SUN ORIENTATION


         WIND DIRECTION (DEGREES) = 40.0
```

```
***********************************************************************
 WARNING:  The time has been reset from   754.
     to   774. to avoid zenith angles greater than 88.00
***********************************************************************
          SIMULATION IS FOR  774. HOURS ON 12/21

          SOLAR ZENITH ANGLE (DEGREES) = 87.9

          SOLAR AZIMUTH ANGLE (DEGREES) =   125.2



          GEOMETRIES FOR LINES-OF-SIGHT THROUGH PLUME PARCELS AT GIVEN DOWNWIND DISTANCES (X)

    X (KM)   AZIMUTH        RP     ALPHA      BETA     THETA
       1.0      51.0      13.1      11.0       0.6      74.2
       2.5      52.4      11.6      12.4       0.7      72.8
       5.0      55.7       9.2      15.7       0.9      69.5
      10.0      73.0       4.6      33.0       1.9      52.2
      13.0     111.4       2.6      71.4       3.2      13.8
1                              BACKGROUND CONDITIONS


     ACCUMULATION MODE                       COARSE PARTICLE MODE                       PRIMARY PARTICLE MODE
     MASS RADIUS    SIGMA   BSCAT.55/MASS        MASS RADIUS    SIGMA   BSCAT.55/MASS        MASS RADIUS    SIGMA   BSCAT.55/MASS
    0.1500E+00   0.2000E+01   0.1066E-01         0.3000E+01   0.2200E+01   0.3219E-03        0.1000E+01   0.2000E+01   0.1045E-02



                                                   REFRACTION INDEXES


     ACCUMULATION MODE     =    0.1500E+01 + I    0.0000E+00

     COARSE MODE           =    0.1500E+01 + I    0.0000E+00

     PRIMARY AEROSOLS      =    0.1500E+01 + I    0.0000E+00

     CARBONACEOUS AEROSOLS =    0.2000E+01 + I    0.1000E+01


                               COEFFICIENTS AT 0.55 MICROMETERS , 1./KM
       BTARAY =0.1119E-01   BTAAER =0.4910E-01   ABSNO2 =0.1860E-02   BTABAC =0.6052E-01


0
                         CONCENTRATIONS OF AEROSOL AND GASES CONTRIBUTED BY

                                   Hyperion December

 DOWNWIND DISTANCE (KM) =    1.0
 PLUME ALTITUDE (M)     =   148.
 SIGMA Y (M)            =    46.
 SIGMA Z (M)            =    17.
 SO2-SO4 CONVERSION RATE=      0.0000 PERCENT/HR
 NOX-NO3 CONVERSION RATE=      0.0000 PERCENT/HR

 ALTITUDE         NOX       NO2       NO3-  NO2/NTOT  NO3-/NTOT     SO2       SO4=  SO4=/STOT     O3     PRIMARY BSP-TOTAL  BSPSN/BSP
                (PPM)     (PPM)     (PPM)  (MOLE %)  (MOLE %)     (PPM)   (UG/M3)  (MOLE %)     (PPM)   (UG/M3) (10-4 M-1)   (%)

  H+2S
 INCREMENT:     0.212     0.079     0.000    37.289     0.000     0.107     0.000     0.000    -0.079   338.807     3.542     0.000
 TOTAL AMB:     0.218     0.085     2.250     3.443    91.175     0.115     2.250     0.497     0.001   344.057     4.033     5.949
```

```
  H+1S
 INCREMENT:     0.949     0.082     0.000     8.616     0.000     0.478     0.000     0.000    -0.080  1518.427    15.872     0.000
 TOTAL AMB:     0.955     0.088     2.250     2.739    70.200     0.486     2.250     0.118     0.000  1523.677    16.363     1.466

  H
 INCREMENT:     1.565     0.083     0.000     5.315     0.000     0.788     0.000     0.000    -0.080  2503.463    26.168     0.000
 TOTAL AMB:     1.571     0.089     2.250     2.334    58.887     0.796     2.250     0.072     0.000  2508.713    26.659     0.900

  H-1S
 INCREMENT:     0.949     0.082     0.000     8.616     0.000     0.478     0.000     0.000    -0.080  1518.427    15.872     0.000
 TOTAL AMB:     0.955     0.088     2.250     2.739    70.200     0.486     2.250     0.118     0.000  1523.677    16.363     1.466

  H-2S
 INCREMENT:     0.212     0.079     0.000    37.289     0.000     0.107     0.000     0.000    -0.079   338.807     3.542     0.000
 TOTAL AMB:     0.218     0.085     2.250     3.443    91.175     0.115     2.250     0.497     0.001   344.057     4.033     5.949

   0
 INCREMENT:     0.000     0.000     0.000     0.000     0.000     0.000     0.000     0.000     0.000     0.000     0.000     0.000
 TOTAL AMB:     0.006     0.006     2.250     0.259    99.734     0.008     2.250     6.685     0.080     5.250     0.491    48.859



 CUMULATIVE SURFACE DEPOSITION (MOLE FRACTIONOF INITIAL FLUX


                 SO2:    0.0000
                 NOX:    0.0000
 PRIMARY PARTICULATE:    0.0000
                 SO4:    0.0000
                 NO3:    0.0000
0
                    VISUAL EFFECTS FOR HORIZONTAL SIGHT PATHS
                    Hyperion December

 DOWNWIND DISTANCE (KM) =    1.0
 PLUME ALTITUDE (M)     =   148.
 PLUME-OBSERVER DISTANCE (KM) =   13.1
 AZIMUTH OF LINE-OF-SIGHT =   51.0
 ELEVATION ANGLE OF LINE-OF-SIGHT =    0.6
 SOLAR ZENITH ANGLE =   87.9   AT  774. ON 12/21
 SIGHT PATH IS THROUGH PLUME CENTER

 THETA ALPHA  RP/RV0    RV  %REDUCED    YCAP       L       X       Y DELYCAP    DELL  C(550)  BRATIO    DELX    DELY  E(LUV)  E(LAB)

   74.
         11.    0.20    37.6   41.88  109.95  103.72  0.3716  0.3694    0.88    0.32  0.0132  1.0340  0.0003  0.0020  1.5457  1.2648
0
                    VISUAL EFFECTS FOR HORIZONTAL SIGHT PATHS
                    Hyperion December

 DOWNWIND DISTANCE (KM) =    1.0
 PLUME ALTITUDE (M)     =   148.
 PLUME-OBSERVER DISTANCE (KM) =   13.1
 AZIMUTH OF LINE-OF-SIGHT =   51.0
 ELEVATION ANGLE OF LINE-OF-SIGHT =    0.6
 SOLAR ZENITH ANGLE =   87.9   AT  774. ON 12/21
 SIGHT PATH IS AT GROUND LEVEL

 THETA ALPHA  RP/RV0    RV  %REDUCED    YCAP       L       X       Y DELYCAP    DELL  C(550)  BRATIO    DELX    DELY  E(LUV)  E(LAB)

   74.
         11.    0.20    64.6    0.00  109.08  103.40  0.3713  0.3674    0.00    0.00  0.0000  1.0000  0.0000  0.0000  0.0022  0.0016
```

0

CONCENTRATIONS OF AEROSOL AND GASES CONTRIBUTED BY

Hyperion December

DOWNWIND DISTANCE (KM) = 2.5
PLUME ALTITUDE (M) = 148.
SIGMA Y (M) = 89.
SIGMA Z (M) = 27.
SO2-SO4 CONVERSION RATE= 0.0000 PERCENT/HR
NOX-NO3 CONVERSION RATE= 0.0000 PERCENT/HR

ALTITUDE	NOX (PPM)	NO2 (PPM)	NO3- (PPM)	NO2/NTOT (MOLE %)	NO3-/NTOT (MOLE %)	SO2 (PPM)	SO4= (UG/M3)	SO4=/STOT (MOLE %)	O3 (PPM)	PRIMARY (UG/M3)	BSP-TOTAL (10-4 M-1)	BSPSN/BSP (%)
H+2S												
INCREMENT:	0.072	0.063	0.000	87.446	0.000	0.036	0.000	0.000	-0.062	114.453	1.196	0.000
TOTAL AMB:	0.078	0.069	2.250	2.946	96.669	0.044	2.250	1.285	0.018	119.703	1.687	14.218
H+1S												
INCREMENT:	0.321	0.081	0.000	25.258	0.000	0.161	0.000	0.000	-0.079	512.943	5.362	0.000
TOTAL AMB:	0.327	0.087	2.250	3.376	87.323	0.169	2.250	0.337	0.001	518.193	5.853	4.099
H												
INCREMENT:	0.529	0.084	0.000	15.864	0.000	0.266	0.000	0.000	-0.080	845.700	8.840	0.000
TOTAL AMB:	0.535	0.090	2.250	3.227	80.801	0.274	2.250	0.209	0.000	850.950	9.331	2.571
H-1S												
INCREMENT:	0.321	0.081	0.000	25.258	0.000	0.161	0.000	0.000	-0.079	512.943	5.362	0.000
TOTAL AMB:	0.327	0.087	2.250	3.376	87.323	0.169	2.250	0.337	0.001	518.193	5.853	4.099
H-2S												
INCREMENT:	0.072	0.063	0.000	87.446	0.000	0.036	0.000	0.000	-0.062	114.453	1.196	0.000
TOTAL AMB:	0.078	0.069	2.250	2.946	96.669	0.044	2.250	1.285	0.018	119.703	1.687	14.218
0												
INCREMENT:	0.000	0.000	0.000	0.000	0.008	0.000	0.000	0.001	0.000	0.000	0.000	0.015
TOTAL AMB:	0.006	0.006	2.250	0.259	99.734	0.008	2.250	6.685	0.080	5.250	0.491	48.859

CUMULATIVE SURFACE DEPOSITION (MOLE FRACTIONOF INITIAL FLUX

SO2: 0.0000
NOX: 0.0000
PRIMARY PARTICULATE: 0.0000
SO4: 0.0000
NO3: 0.0000

0

VISUAL EFFECTS FOR HORIZONTAL SIGHT PATHS
Hyperion December

DOWNWIND DISTANCE (KM) = 2.5
PLUME ALTITUDE (M) = 148.
PLUME-OBSERVER DISTANCE (KM) = 11.6
AZIMUTH OF LINE-OF-SIGHT = 52.4
ELEVATION ANGLE OF LINE-OF-SIGHT = 0.7
SOLAR ZENITH ANGLE = 87.9 AT 774. ON 12/21
SIGHT PATH IS THROUGH PLUME CENTER

THETA ALPHA RP/RV0 RV %REDUCED YCAP L X Y DELYCAP DELL C(550) BRATIO DELX DELY E(LUV) E(LAB)

```
   73.
         12.    0.18    48.5   24.91  109.48  103.55  0.3744  0.3705   -0.23   -0.08  0.0013  1.0002  0.0022  0.0029  2.2671  1.8515
0
                    VISUAL EFFECTS FOR HORIZONTAL SIGHT PATHS
                    Hyperion December

 DOWNWIND DISTANCE (KM) =    2.5
 PLUME ALTITUDE (M)     =   148.
 PLUME-OBSERVER DISTANCE (KM) =   11.6
 AZIMUTH OF LINE-OF-SIGHT =   52.4
 ELEVATION ANGLE OF LINE-OF-SIGHT =    0.7
 SOLAR ZENITH ANGLE =   87.9   AT  774. ON 12/21
 SIGHT PATH IS AT GROUND LEVEL

 THETA ALPHA  RP/RV0    RV  %REDUCED    YCAP       L       X       Y DELYCAP    DELL  C(550)  BRATIO    DELX    DELY  E(LUV)  E(LAB)

   73.
         12.    0.18    64.6    0.00  109.72  103.64  0.3721  0.3676    0.00    0.00  0.0000  1.0001  0.0000  0.0000  0.0045  0.0032
0
                         CONCENTRATIONS OF AEROSOL AND GASES CONTRIBUTED BY

                                   Hyperion December

 DOWNWIND DISTANCE (KM) =    5.0
 PLUME ALTITUDE (M)     =   148.
 SIGMA Y (M)            =   156.
 SIGMA Z (M)            =    35.
 SO2-SO4 CONVERSION RATE=      0.0000 PERCENT/HR
 NOX-NO3 CONVERSION RATE=      0.0000 PERCENT/HR

 ALTITUDE         NOX       NO2       NO3-  NO2/NTOT  NO3-/NTOT     SO2       SO4=  SO4=/STOT     O3     PRIMARY BSP-TOTAL  BSPSN/BSP
                (PPM)     (PPM)     (PPM)  (MOLE %)  (MOLE %)     (PPM)   (UG/M3)  (MOLE %)     (PPM)   (UG/M3) (10-4 M-1)   (%)

  H+2S
 INCREMENT:     0.031     0.029     0.000    94.827     0.000     0.015     0.000     0.000    -0.029    48.894     0.511     0.000
 TOTAL AMB:     0.037     0.035     2.250     1.530    98.401     0.023     2.250     2.391     0.051    54.144     1.002    23.940

  H+1S
 INCREMENT:     0.137     0.078     0.000    56.753     0.000     0.069     0.000     0.000    -0.077   219.130     2.291     0.000
 TOTAL AMB:     0.143     0.084     2.250     3.499    94.025     0.077     2.250     0.739     0.003   224.380     2.782     8.625

  H
 INCREMENT:     0.226     0.081     0.000    35.928     0.000     0.114     0.000     0.000    -0.079   361.284     3.776     0.000
 TOTAL AMB:     0.232     0.087     2.250     3.511    90.659     0.122     2.250     0.469     0.001   366.534     4.267     5.622

  H-1S
 INCREMENT:     0.137     0.078     0.000    56.753     0.000     0.069     0.000     0.000    -0.077   219.130     2.291     0.000
 TOTAL AMB:     0.143     0.084     2.250     3.499    94.025     0.077     2.250     0.739     0.003   224.380     2.782     8.625

  H-2S
 INCREMENT:     0.031     0.029     0.000    94.827     0.000     0.015     0.000     0.000    -0.029    48.894     0.511     0.000
 TOTAL AMB:     0.037     0.035     2.250     1.530    98.401     0.023     2.250     2.391     0.051    54.144     1.002    23.940

   0
 INCREMENT:     0.000     0.000     0.000     0.000     0.018     0.000     0.000     0.003     0.000     0.117     0.001     0.034
 TOTAL AMB:     0.006     0.006     2.250     0.262    99.731     0.008     2.250     6.657     0.080     5.367     0.492    48.738



 CUMULATIVE SURFACE DEPOSITION (MOLE FRACTIONOF INITIAL FLUX
```

```
                SO2:    0.0000
                NOX:    0.0000
 PRIMARY PARTICULATE:    0.0000
                SO4:    0.0000
                NO3:    0.0000
0
                   VISUAL EFFECTS FOR HORIZONTAL SIGHT PATHS
                   Hyperion December

 DOWNWIND DISTANCE (KM) =    5.0
 PLUME ALTITUDE (M)     =   148.
 PLUME-OBSERVER DISTANCE (KM) =    9.2
 AZIMUTH OF LINE-OF-SIGHT =   55.7
 ELEVATION ANGLE OF LINE-OF-SIGHT =    0.9
 SOLAR ZENITH ANGLE =   87.9   AT  774. ON 12/21
 SIGHT PATH IS THROUGH PLUME CENTER

 THETA ALPHA  RP/RV0    RV  %REDUCED    YCAP       L       X       Y DELYCAP    DELL  C(550)  BRATIO    DELX    DELY  E(LUV)  E(LAB)

   69.
         16.    0.14    54.9   15.10  110.23  103.82  0.3784  0.3723   -1.24   -0.45 -0.0088  0.9643  0.0041  0.0041  3.5969  2.8221
0
                   VISUAL EFFECTS FOR HORIZONTAL SIGHT PATHS
                   Hyperion December

 DOWNWIND DISTANCE (KM) =    5.0
 PLUME ALTITUDE (M)     =   148.
 PLUME-OBSERVER DISTANCE (KM) =    9.2
 AZIMUTH OF LINE-OF-SIGHT =   55.7
 ELEVATION ANGLE OF LINE-OF-SIGHT =    0.9
 SOLAR ZENITH ANGLE =   87.9   AT  774. ON 12/21
 SIGHT PATH IS AT GROUND LEVEL

 THETA ALPHA  RP/RV0    RV  %REDUCED    YCAP       L       X       Y DELYCAP    DELL  C(550)  BRATIO    DELX    DELY  E(LUV)  E(LAB)

   69.
         16.    0.14    64.6    0.00  111.47  104.27  0.3742  0.3682    0.00    0.00  0.0000  1.0001  0.0000  0.0000  0.0047  0.0034
0
                         CONCENTRATIONS OF AEROSOL AND GASES CONTRIBUTED BY

                                   Hyperion December

 DOWNWIND DISTANCE (KM) =   10.0
 PLUME ALTITUDE (M)     =   148.
 SIGMA Y (M)            =   281.
 SIGMA Z (M)            =    47.
 SO2-SO4 CONVERSION RATE=      0.0000 PERCENT/HR
 NOX-NO3 CONVERSION RATE=      0.0000 PERCENT/HR

 ALTITUDE         NOX       NO2       NO3-  NO2/NTOT  NO3-/NTOT     SO2       SO4=  SO4=/STOT     O3     PRIMARY BSP-TOTAL  BSPSN/BSP
                (PPM)     (PPM)     (PPM)  (MOLE %)  (MOLE %)     (PPM)   (UG/M3)  (MOLE %)     (PPM)   (UG/M3) (10-4 M-1)   (%)

  H+2S
 INCREMENT:     0.013     0.012     0.000    95.159     0.003     0.006     0.000     0.000    -0.012    20.474     0.214     0.005
 TOTAL AMB:     0.019     0.018     2.250     0.801    99.172     0.014     2.250     3.816     0.068    25.724     0.705    34.029

  H+1S
 INCREMENT:     0.057     0.053     0.000    91.564     0.000     0.029     0.000     0.000    -0.052    91.758     0.959     0.000
 TOTAL AMB:     0.063     0.059     2.250     2.530    97.261     0.037     2.250     1.530     0.028    97.008     1.450    16.544

  H
 INCREMENT:     0.095     0.073     0.000    77.040     0.000     0.048     0.000     0.000    -0.072   151.283     1.581     0.000
 TOTAL AMB:     0.101     0.079     2.250     3.355    95.722     0.056     2.250     1.020     0.008   156.533     2.072    11.576
```

```
  H-1S
 INCREMENT:     0.057     0.053     0.000    91.564     0.000     0.029     0.000     0.000    -0.052    91.758     0.959     0.000
 TOTAL AMB:     0.063     0.059     2.250     2.530    97.261     0.037     2.250     1.530     0.028    97.008     1.450    16.544

  H-2S
 INCREMENT:     0.013     0.012     0.000    95.159     0.003     0.006     0.000     0.000    -0.012    20.489     0.214     0.005
 TOTAL AMB:     0.019     0.018     2.250     0.802    99.171     0.014     2.250     3.815     0.068    25.739     0.705    34.021

   0
 INCREMENT:     0.001     0.001     0.000    84.507     0.036     0.001     0.000     0.005    -0.001     2.165     0.023     0.066
 TOTAL AMB:     0.007     0.007     2.250     0.316    99.674     0.009     2.250     6.193     0.079     7.415     0.514    46.708



 CUMULATIVE SURFACE DEPOSITION (MOLE FRACTIONOF INITIAL FLUX


                SO2:    0.0000
                NOX:    0.0000
 PRIMARY PARTICULATE:    0.0000
                SO4:    0.0000
                NO3:    0.0000
0
                   VISUAL EFFECTS FOR HORIZONTAL SIGHT PATHS
                   Hyperion December

 DOWNWIND DISTANCE (KM) =   10.0
 PLUME ALTITUDE (M)     =   148.
 PLUME-OBSERVER DISTANCE (KM) =    4.6
 AZIMUTH OF LINE-OF-SIGHT =   73.0
 ELEVATION ANGLE OF LINE-OF-SIGHT =    1.9
 SOLAR ZENITH ANGLE =   87.9   AT  774. ON 12/21
 SIGHT PATH IS THROUGH PLUME CENTER

 THETA ALPHA  RP/RV0    RV  %REDUCED    YCAP       L       X       Y DELYCAP    DELL  C(550)  BRATIO    DELX    DELY  E(LUV)  E(LAB)

   52.
        33.    0.07    60.9    5.76  122.34  108.05  0.3940  0.3762   -1.58   -0.53 -0.0116  0.9327  0.0049  0.0045  4.2283  3.3872
0
                   VISUAL EFFECTS FOR HORIZONTAL SIGHT PATHS
                   Hyperion December

 DOWNWIND DISTANCE (KM) =   10.0
 PLUME ALTITUDE (M)     =   148.
 PLUME-OBSERVER DISTANCE (KM) =    4.6
 AZIMUTH OF LINE-OF-SIGHT =   73.0
 ELEVATION ANGLE OF LINE-OF-SIGHT =    1.9
 SOLAR ZENITH ANGLE =   87.9   AT  774. ON 12/21
 SIGHT PATH IS AT GROUND LEVEL

 THETA ALPHA  RP/RV0    RV  %REDUCED    YCAP       L       X       Y DELYCAP    DELL  C(550)  BRATIO    DELX    DELY  E(LUV)  E(LAB)

   52.
        33.    0.07    64.6    0.08  123.89  108.58  0.3892  0.3718   -0.02   -0.01 -0.0002  0.9989  0.0001  0.0001  0.0687  0.0548
0
                        CONCENTRATIONS OF AEROSOL AND GASES CONTRIBUTED BY

                                  Hyperion December

 DOWNWIND DISTANCE (KM) =   13.0
 PLUME ALTITUDE (M)     =   148.
```

```
 SIGMA Y (M)            =   352.
 SIGMA Z (M)            =    52.
 SO2-SO4 CONVERSION RATE=      0.0000 PERCENT/HR
 NOX-NO3 CONVERSION RATE=      0.0003 PERCENT/HR

 ALTITUDE         NOX       NO2       NO3-  NO2/NTOT  NO3-/NTOT     SO2       SO4=  SO4=/STOT     O3     PRIMARY BSP-TOTAL  BSPSN/BSP
                 (PPM)     (PPM)     (PPM)  (MOLE %)  (MOLE %)     (PPM)   (UG/M3)  (MOLE %)     (PPM)   (UG/M3) (10-4 M-1)   (%)

  H+2S
 INCREMENT:     0.009     0.009     0.000    94.722     0.005     0.005     0.000     0.001    -0.009    14.712     0.154     0.009
 TOTAL AMB:     0.015     0.015     2.250     0.649    99.330     0.013     2.250     4.342     0.071    19.962     0.645    37.208

  H+1S
 INCREMENT:     0.041     0.039     0.000    93.890     0.001     0.021     0.000     0.000    -0.038    65.934     0.689     0.001
 TOTAL AMB:     0.047     0.045     2.250     1.946    97.946     0.029     2.250     1.955     0.042    71.184     1.180    20.328

  H
 INCREMENT:     0.068     0.060     0.000    88.893     0.000     0.034     0.000     0.000    -0.060   108.707     1.136     0.000
 TOTAL AMB:     0.074     0.066     2.250     2.858    96.820     0.042     2.250     1.340     0.020   113.957     1.627    14.742

  H-1S
 INCREMENT:     0.041     0.039     0.000    93.890     0.001     0.021     0.000     0.000    -0.038    65.936     0.689     0.001
 TOTAL AMB:     0.047     0.045     2.250     1.946    97.946     0.029     2.250     1.955     0.042    71.186     1.180    20.327

  H-2S
 INCREMENT:     0.009     0.009     0.000    94.735     0.005     0.005     0.000     0.001    -0.009    14.847     0.155     0.009
 TOTAL AMB:     0.015     0.015     2.250     0.653    99.326     0.013     2.250     4.328     0.071    20.097     0.646    37.127

   0
 INCREMENT:     0.002     0.002     0.000    90.034     0.023     0.001     0.000     0.003    -0.002     3.971     0.042     0.042
 TOTAL AMB:     0.008     0.008     2.250     0.365    99.625     0.009     2.250     5.836     0.078     9.221     0.533    45.053



 CUMULATIVE SURFACE DEPOSITION (MOLE FRACTIONOF INITIAL FLUX


                 SO2:    0.0009
                 NOX:    0.0009
 PRIMARY PARTICULATE:    0.0001
                 SO4:    0.0000
                 NO3:    0.0000
0
                    VISUAL EFFECTS FOR HORIZONTAL SIGHT PATHS
                    Hyperion December

 DOWNWIND DISTANCE (KM) =   13.0
 PLUME ALTITUDE (M)     =   148.
 PLUME-OBSERVER DISTANCE (KM) =    2.6
 AZIMUTH OF LINE-OF-SIGHT =  111.4
 ELEVATION ANGLE OF LINE-OF-SIGHT =    3.2
 SOLAR ZENITH ANGLE =   87.9   AT  774. ON 12/21
 SIGHT PATH IS THROUGH PLUME CENTER

 THETA ALPHA  RP/RV0    RV  %REDUCED    YCAP       L       X       Y DELYCAP    DELL  C(550)  BRATIO    DELX    DELY  E(LUV)  E(LAB)

   14.
        71.    0.04    62.4    3.44  192.47  128.26  0.4512  0.3855    3.35    0.84  0.0110  0.8970  0.0061  0.0027  6.4919  4.6318
0
                    VISUAL EFFECTS FOR HORIZONTAL SIGHT PATHS
                    Hyperion December
```

```
 DOWNWIND DISTANCE (KM) =   13.0
 PLUME ALTITUDE (M)     =   148.
 PLUME-OBSERVER DISTANCE (KM) =    2.6
 AZIMUTH OF LINE-OF-SIGHT =  111.4
 ELEVATION ANGLE OF LINE-OF-SIGHT =    3.2
 SOLAR ZENITH ANGLE =   87.9   AT  774. ON 12/21
 SIGHT PATH IS AT GROUND LEVEL

 THETA ALPHA  RP/RV0    RV  %REDUCED    YCAP       L       X       Y DELYCAP    DELL  C(550)  BRATIO    DELX    DELY  E(LUV)  E(LAB)

   14.
        71.    0.04    64.6    0.13  189.25  127.45  0.4454  0.3830    0.13    0.03  0.0004  0.9958  0.0002  0.0001  0.2516  0.1786
0
 HISTORY OF PLUME PARCEL AT DOWNWIND DISTANCE =   1.0 KM


    PARCEL     LOCAL       SO2-TO-SO4= CONVERSION RATE (%/HR)       NOX-TO-HNO3 CONVERSION RATE (%/HR)
      AGE       TIME
      (HR)                 H+2S  H+1S  H     H-1S  H-2S   0         H+2S  H+1S  H     H-1S  H-2S   0

       0.1       814       0.00  0.00  0.00  0.00  0.00  0.00       0.00  0.00  0.00  0.00  0.00  0.00
0
 HISTORY OF PLUME PARCEL AT DOWNWIND DISTANCE =   2.5 KM


    PARCEL     LOCAL       SO2-TO-SO4= CONVERSION RATE (%/HR)       NOX-TO-HNO3 CONVERSION RATE (%/HR)
      AGE       TIME
      (HR)                 H+2S  H+1S  H     H-1S  H-2S   0         H+2S  H+1S  H     H-1S  H-2S   0

       0.1       802       0.00  0.00  0.00  0.00  0.00  0.00       0.00  0.00  0.00  0.00  0.00  0.00
       0.3       814       0.00  0.00  0.00  0.00  0.00  0.01       0.00  0.00  0.00  0.00  0.00  0.04
0
 HISTORY OF PLUME PARCEL AT DOWNWIND DISTANCE =   5.0 KM


    PARCEL     LOCAL       SO2-TO-SO4= CONVERSION RATE (%/HR)       NOX-TO-HNO3 CONVERSION RATE (%/HR)
      AGE       TIME
      (HR)                 H+2S  H+1S  H     H-1S  H-2S   0         H+2S  H+1S  H     H-1S  H-2S   0

       0.1       743       0.00  0.00  0.00  0.00  0.00  0.00       0.00  0.00  0.00  0.00  0.00  0.00
       0.3       755       0.00  0.00  0.00  0.00  0.00  0.00       0.00  0.00  0.00  0.00  0.00  0.03
       0.6       814       0.00  0.00  0.00  0.00  0.00  0.01       0.00  0.00  0.00  0.00  0.00  0.04
0
 HISTORY OF PLUME PARCEL AT DOWNWIND DISTANCE =  10.0 KM


    PARCEL     LOCAL       SO2-TO-SO4= CONVERSION RATE (%/HR)       NOX-TO-HNO3 CONVERSION RATE (%/HR)
      AGE       TIME
      (HR)                 H+2S  H+1S  H     H-1S  H-2S   0         H+2S  H+1S  H     H-1S  H-2S   0

       0.1       706       0.00  0.00  0.00  0.00  0.00  0.00       0.00  0.00  0.00  0.00  0.00  0.00
       0.3       717       0.00  0.00  0.00  0.00  0.00  0.00       0.00  0.00  0.00  0.00  0.00  0.01
       0.6       736       0.00  0.00  0.00  0.00  0.00  0.00       0.00  0.00  0.00  0.00  0.00  0.02
       1.3       814       0.00  0.00  0.00  0.00  0.00  0.01       0.00  0.00  0.00  0.00  0.00  0.04
0
 HISTORY OF PLUME PARCEL AT DOWNWIND DISTANCE =  13.0 KM


    PARCEL     LOCAL       SO2-TO-SO4= CONVERSION RATE (%/HR)       NOX-TO-HNO3 CONVERSION RATE (%/HR)
      AGE       TIME
      (HR)                 H+2S  H+1S  H     H-1S  H-2S   0         H+2S  H+1S  H     H-1S  H-2S   0

       0.1       643       0.00  0.00  0.00  0.00  0.00  0.00       0.00  0.00  0.00  0.00  0.00  0.00
       0.3       654       0.00  0.00  0.00  0.00  0.00  0.00       0.00  0.00  0.00  0.00  0.00  0.00
```

```
       0.6       713       0.00  0.00  0.00  0.00  0.00  0.00       0.00  0.00  0.00  0.00  0.00  0.01
       1.3       751       0.00  0.00  0.00  0.00  0.00  0.00       0.00  0.00  0.00  0.00  0.00  0.01
       1.6       814       0.00  0.00  0.00  0.00  0.00  0.01       0.01  0.00  0.00  0.00  0.01  0.04
1                                                          PLOT FILE VERIFICATION
0                                                           OBSERVER-BASED DATA
0     SKY BACKGROUND
      For ground level if calculations done for both plume centerline and ground level.
0         NX             1      2      3      4      5
0   DISTANCE (KM)       1.     3.     5.    10.    13.
0 REDUCTION OF VISUAL
      RANGE (%)       0.000  0.000  0.005  0.083  0.127
0  BLUE-RED RATIO
                      1.000  1.000  1.000  0.999  0.996
0  PLUME CONTRAST AT
     0.55 MICRONS     0.000  0.000  0.000  0.000  0.000
0PLUME PERCEPTIBILITY
   DELTA E(L*A*B*)    0.002  0.003  0.003  0.055  0.179

0   WHITE BACKGROUND
0         NX             1      2      3      4      5
0   DISTANCE (KM)       1.     3.     5.    10.    13.
0 REDUCTION OF VISUAL
      RANGE (%)       0.000  0.000  0.000  0.000  0.000
0  BLUE-RED RATIO
                      0.000  0.000  0.000  0.000  0.000
0  PLUME CONTRAST AT
     0.55 MICRONS
  EYE ACCOMODATED TO
       BACKGROUND     0.000  0.000  0.000  0.000  0.000
  EYE ACCOMODATED TO
       SKY            0.000  0.000  0.000  0.000  0.000
0PLUME PERCEPTIBILITY
   DELTA E(L*A*B*)    0.000  0.000  0.000  0.000  0.000

0    GRAY BACKGROUND
0         NX             1      2      3      4      5
0   DISTANCE (KM)       1.     3.     5.    10.    13.
0 REDUCTION OF VISUAL
      RANGE (%)       0.000  0.000  0.000  0.000  0.000
0  BLUE-RED RATIO
                      0.000  0.000  0.000  0.000  0.000
0  PLUME CONTRAST AT
     0.55 MICRONS
  EYE ACCOMODATED TO
       BACKGROUND     0.000  0.000  0.000  0.000  0.000
  EYE ACCOMODATED TO
       SKY            0.000  0.000  0.000  0.000  0.000
0PLUME PERCEPTIBILITY
   DELTA E(L*A*B*)    0.000  0.000  0.000  0.000  0.000
1   BLACK BACKGROUND
0         NX             1      2      3      4      5
0   DISTANCE (KM)       1.     3.     5.    10.    13.
0 REDUCTION OF VISUAL
      RANGE (%)       0.000  0.000  0.000  0.000  0.000
0  BLUE-RED RATIO
                      0.000  0.000  0.000  0.000  0.000
0  PLUME CONTRAST AT
     0.55 MICRONS
  EYE ACCOMODATED TO
       BACKGROUND     0.000  0.000  0.000  0.000  0.000
  EYE ACCOMODATED TO
       SKY            0.000  0.000  0.000  0.000  0.000
0PLUME PERCEPTIBILITY
   DELTA E(L*A*B*)    0.000  0.000  0.000  0.000  0.000
```

Appendix F

Soils and Vegetation Impacts Analysis

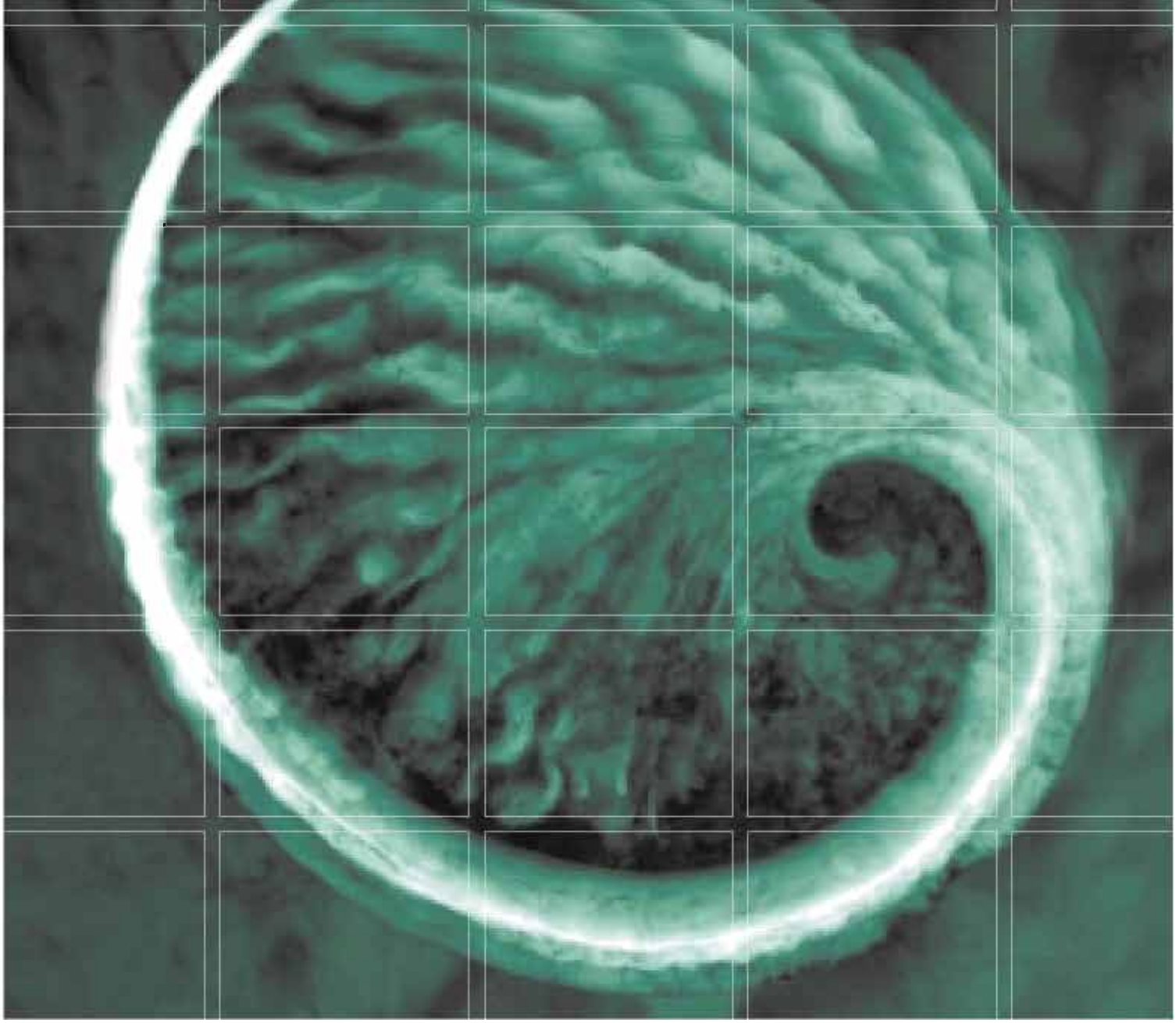

Soil and Vegetation Effects Analysis

Hyperion Energy Center

October 1, 2007

www.erm.com

Delivering sustainable solutions in a more competitive world

ERM

Hyperion Energy Center

Soil and Vegetation Effects Analysis

October 1, 2007

Project No. 0062074
Union County, South Dakota

Todd H. Hall, P.E.
Partner-in-Charge

Erin Anitsakis
Project Scientist

Environmental Resources Management
15810 Park Ten Place, Suite 300
Houston, Texas 77084-5140
T: 281-600-1000
F: 281-600-1001

TABLE OF CONTENTS

1.0	*INTRODUCTION*		*1*
2.0	*ASSESSMENT METHODOLOGY*		*2*
	2.1	*IDENTIFICATION OF CROPS TO BE ASSESSED*	*2*
	2.2	*DETERMINATION OF AIR POLLUTANTS TO BE ASSESSED*	*2*
		2.2.1 Direct Phytotoxic Effects of Air Pollutants	*2*
		2.2.2 Indirect Effects of Air Pollutants due to Deposition to Soils	*3*
		2.2.3 Summary of Pollutants Assessed	*3*
	2.3	*DETERMINATION OF EFFECTS CONCENTRATIONS*	*4*
		2.3.1 Direct Phytotoxic Effects	*4*
		2.3.2 Indirect Deposition Effects	*4*
3.0	*RESULTS*		*7*
	3.1	*SULFUR DIOXIDE*	*7*
	3.2	*NITROGEN OXIDES*	*9*
	3.3	*AMMONIA*	*11*
	3.4	*ANTIMONY*	*11*
	3.5	*ARSENIC*	*12*
	3.6	*CADMIUM*	*14*
	3.7	*CHROMIUM*	*17*
	3.8	*COBALT*	*19*
	3.9	*COPPER*	*19*
	3.10	*FLUORIDE*	*22*
	3.11	*LEAD*	*22*
	3.12	*MANGANESE*	*25*
	3.13	*MERCURY*	*26*
	3.14	*NICKEL*	*28*
	3.15	*SELENIUM*	*30*
	3.16	*STRONTIUM*	*32*
	3.17	*ZINC*	*33*
4.0	*SUMMARY AND CONCLUSIONS*		*35*

1.0 INTRODUCTION

Pursuant to South Dakota Administrative Rule (A.R.S.D.) § 74:36:09 and 40 C.F.R. § 52.21(o), an analysis of the potential effects of air pollutant emissions on soils and vegetation must be conducted before a Prevention of Significant Deterioration (PSD) permit can be issued for a new major stationary source. This soils and vegetation effects analysis was conducted by ERM for the proposed Hyperion Energy Center (HEC) to be constructed in Union County, South Dakota.

The objective of the analysis was to assess whether predicted air pollutant emissions from the HEC are expected to result in an adverse impact to soils and vegetation in the vicinity of the project site. Based on the fact that land use in the vicinity of the proposed project site is predominantly agricultural, the analysis focused on assessing impacts to agricultural crops grown near the proposed project site.

The remainder of this document is organized as follows:

- *Section 2* describes the methodologies utilized for identifying crops to be subjected to the effects analysis, identifying air pollutants to which these crops may be sensitive, and establishing pollutant concentrations below which adverse impacts to these crops are not expected to occur.
- *Section 3* discusses the results of dispersion modeling for each air pollutant, and assesses these results with respect to the identified protective concentration levels.
- *Section 4* presents a summary of conclusions for the assessment.

2.0 *ASSESSMENT METHODOLOGY*

2.1 *IDENTIFICATION OF CROPS TO BE ASSESSED*

ERM consulted with the South Dakota office of the United States Department of Agriculture (USDA) Natural Resource Conservation Service (NCRS) to identify whether any sensitive soils or vegetation are present in the vicinity of the proposed project site, and to identify the principal crops grown in the vicinity of the project site.

Based on the results of this consultation, ERM identified the following as the principal crops grown commercially in Union County, South Dakota:

- Wheat (*Triticum aestivum*);
- Corn (*Zea mays);*
- Soybean (*Glycine max*);
- Oats (*Avena sativa*);
- Barley (*Hordeum vulgare*);
- Sorghum (*Sorghum bicolor*);
- Alfalfa (*Medicago sativa*); and
- Apples (*Malus domestica*).

2.2 *DETERMINATION OF AIR POLLUTANTS TO BE ASSESSED*

As discussed below, there are substantial scientific data characterizing the effects of air pollutant emissions on certain crops (e.g., wheat), whereas there are limited data available for other crops. This subsection discusses the methodology utilized to identify air pollutants to which the above-referenced crops are expected to be sensitive. Air pollutants can affect crops through two principal means:

- Direct phytotoxic effects from air concentrations of pollutants; and
- Indirect phytotoxic effects due to deposition of pollutants in soils in which the crops are growing.

2.2.1 *Direct Phytotoxic Effects of Air Pollutants*

Several gaseous air pollutants that will be emitted from the HEC are known to be toxic to some plants at moderate to high concentrations in the ambient air. Of the air pollutants subject to the PSD soils and vegetation effects analysis requirement (A.R.S.D. 74:36:05:06), the pollutants of primary concern with respect to crop effects are SO_2 and NO_X. Accordingly, ERM considered these criteria pollutants in the effects analysis.

Carbon monoxide is generally not considered to be phytotoxic.[1,2] Thus, this criteria pollutant was not considered further in the effects analysis.

Although it is not subject to the PSD soils and vegetation effects analysis requirement, the analysis considered ammonia (NH_3), due to the fact that this pollutant will be emitted by the HEC in relatively large quantities, relative to other non-PSD pollutants.

2.2.2 *Indirect Effects of Air Pollutants due to Deposition to Soils*

The particulate matter emitted by the HEC will contain relatively small quantities of metals, and these metals will be deposited to some extent on land near the HEC. Several of the metals are Hazardous Air Pollutants (HAPs), several are known to cause adverse human health effects, and several are known to be phytotoxic. Accordingly, the effects analysis assessed the phytotoxic and follow-on human health effects that could occur as a result of deposition of metals to soils used for agricultural crop production.

2.2.3 *Summary of Pollutants Assessed*

Based on the considerations above, ERM assessed the following pollutants as part of this effects analysis:

- Sulfur dioxide (SO_2);
- Nitrogen oxides (NO_X);
- Ammonia (NH_3);
- Arsenic (As);
- Antimony (Sb);
- Cadmium (Cd);
- Chromium (Cr);
- Cobalt (Co);
- Copper (Cu);
- Lead (Pb);
- Fluoride (F);
- Manganese (Mn);
- Mercury (Hg);
- Nickel (Ni);

---

[1] Smith, A.E., and J.B. Levenson. *A Screening Procedure for the Impacts of Air Pollution Sources on Plants, Soils, and Animals (EPA-450/2-81-078).* U.S. EPA, Office of Air Quality Planning and Standards. Research Triangle Park, NC. December 1980. p. 11.
[2] *Air Quality Criteria for Carbon Monoxide.* U.S. Department of Health, Education, and Welfare, Public Health Service, National Air Pollution Control Administration. Washington, DC. March 1970. pp. 7-1 through 7-3.

- Selenium (Se);
- Strontium (Sr); and
- Zinc (Zn).

2.3 *DETERMINATION OF EFFECTS CONCENTRATIONS*

This section discusses the methodology used to determine air pollutant concentrations expected to result in adverse effects to the above-referenced crops.

2.3.1 *Direct Phytotoxic Effects*

As is customary for this type of analysis, the assessment relied heavily on the screening criteria in the U.S. EPA report *A Screening Procedure for the Impacts of Air Pollution Sources on Plants, Soils, and Animals.* [3] This document establishes air pollutant concentrations that are generally viewed by U.S. EPA to be protective of soils and vegetation having significant commercial or recreational value, including agricultural crops, based on a broad review of pertinent scientific literature. ERM also relied on the secondary National Ambient Air Quality Standards (NAAQS), [4] which are established by U.S. EPA at levels that are protective of the public welfare, including agriculture.

2.3.2 *Indirect Deposition Effects*

There is a significant amount of available data describing the phytotoxic effects that elevated metals concentrations in soils may have on plants, including agricultural crops. There is also a significant amount of data describing the human health effects that may occur due to consumption of plants grown in soils containing elevated metals concentrations. A number of regulations and guidelines have been established for the purpose of limiting the concentrations of metals in soils, including soils used for agricultural crop production. These regulations and guidelines have been developed to protect against adverse human health effects and adverse ecological effects (including phytotoxicity).

Two general approaches have been used in establishing deposition rate limits and soil concentration limits: a) preventing accumulation of pollutants in soils; and b) maximizing the capacity of soils to assimilate, attenuate, and detoxify pollutants. The first approach is based on the premise that soil can be used without any undue restriction if it is maintained free of contamination; if pollutants are artificially introduced and are allowed to accumulate in the soil, then, over the long term, the potential uses of the soil may become limited. The second approach is based on the premise that soils have a capacity to detoxify

---

[3] Smith, A.E., and J.B. Levenson. *A Screening Procedure for the Impacts of Air Pollution Sources on Plants, Soils, and Animals (EPA-450/2-81-078).* U.S. EPA, Office of Air Quality Planning and Standards. Research Triangle Park, NC. December 1980.
[4] See, 40 CFR part 50.

pollutants. This approach has been applied by the U.S. EPA and by the World Health Organization. [5]

For each metal addressed, the analysis calculated the maximum predicted deposition rate as the product of the deposition rate and the specific metal concentration. For example, the cadmium deposition rate is calculated as follows:

$$DR_{Cd} = 1.0\,\frac{\text{cm}}{\text{sec}} \times 0.00000123\,\frac{\mu\text{g}}{\text{m}^3} \times 315.36\,\frac{\text{sec}\cdot\text{kg}\cdot\text{m}^2}{\text{yr}\cdot\mu\text{g}\cdot\text{ha}} = 0.00039\,\frac{\text{kg}}{\text{ha}\cdot\text{yr}}$$

where:

DR_{Cd}	= cadmium deposition rate
1.0 cm/sec	= deposition rate
0.00000123 μg/m³	= modeled cadmium concentration
$315.36\,\frac{\text{sec}\cdot\text{kg}\cdot\text{m}^2}{\text{yr}\cdot\mu\text{g}\cdot\text{ha}}$	= conversion factor

As a conservative measure, the analysis calculated the total pollutant deposition (mass per unit area) that would be expected to occur over a 100 year period. For example, the 100-year cadmium deposition is calculated as follows:

$$D_{Cd} = 0.00039\ \text{kg/ha}\cdot\text{yr} \times 100\ \text{yrs} = 0.039\ \text{kg/ha}$$

where:

D_{Cd}	= 100-year cadmium deposition
0.00039 kg/ha·yr	= cadmium deposition rate
100 years	= assumed pollutant accumulation period

Finally, the analysis calculated the maximum predicted increases in soil concentration due to the predicted deposition. For each metal, this value is calculated assuming that accumulation occurs over a 100 year period, using the 100-year deposition value described above, with no plant uptake or other pollutant removal (e.g., via wind erosion, runoff, etc.), and using an assumed soil mass (into which the pollutants would be distributed) of 1,600 kilograms per cubic meter. Additionally, it is assumed that the deposited particulate would be mixed throughout the top 5 cm of soil. For example, the soil cadmium concentration is calculated as follows:

$$C_{Cd} = \frac{0.039\ \text{kg/ha}}{800{,}000\ \text{kg/ha}} \times 10^6 = 0.048\ \text{ppmw}$$

[5] A.C. Chang, et al. *Developing Human Health-related Chemical Guidelines for Reclaimed Water and Sewage Sludge Applications in Agriculture.* World Health Organization. Copenhagen, Denmark. May 2002. pp. 19-41.

where:

C_{Cd}	= soil cadmium concentration, in parts per million by weight
0.039 kg/ha·yr	= cadmium deposition rate
800,000 kg/ha	= assumed mass of soil into which pollutant would be distributed through deposition (5 cm mixing depth)

3.0 *RESULTS*

This section presents the results of dispersion modeling (and deposition calculations, where applicable) for each air pollutant, and assesses these results with respect to effects levels

3.1 *SULFUR DIOXIDE*

Based on the results of the air quality impacts analysis, the maximum predicted ambient SO_2 concentrations in the vicinity of the HEC are as follows:

- 4.88 µg/m^3 (annual average);
- 51.4 µg/m^3 (24-hr average); and
- 129 µg/m^3 (3-hr average).

These conservative values are well below the secondary NAAQS of 1,300 µg/m^3 (three-hour average) and 78 µg/m^3 (annual average) and the minimum U.S. EPA screening values of 786 µg/m^3 (three-hour average) and 18 µg/m^3 (annual average). [6] The agricultural crops for which the minimum U.S. EPA screening values are listed as being protective include alfalfa, apple, barley, corn, oats, sorghum, soybean and wheat. [7]

ERM reviewed literature to ascertain whether there exists, in the scientific literature, any basis for concluding that: a) the secondary NAAQS and the minimum U.S. EPA screening values are not protective of any of the crops identified in Section I herein; or b) the HEC's SO_2 emissions will have an unacceptable, adverse impact on agricultural crops grown near the HEC site. A summary of our findings follows.

In 2000, the WHO, in conjunction with the United Nations Economic Commission for Europe, reaffirmed its SO_2 guideline concentration value of 30 µg/m^3. This value applies both on an annual average basis and, "in view of the increased sensitivity of crops growing slowly under winter conditions," on a winter-average basis (from October 1 through March 31). The 30 µg/m^3 value is based on protecting the most sensitive types of agricultural crops for which good quality data are available. Also in 2000, the WHO abandoned the previous short-term SO_2 guideline concentration value of 100 µg/m^3 (daily average), "in view of further evidence that peak concentrations are not significant compared with the accumulated dose." [8]

---

[6] Smith, A.E., and J.B. Levenson. *A Screening Procedure for the Impacts of Air Pollution Sources on Plants, Soils, and Animals (EPA-450/2-81-078).* U.S. EPA, Office of Air Quality Planning and Standards. Research Triangle Park, NC. December 1980. p. 11.
[7] Ibid. p. 61.
[8] *Air Quality Guidelines for Europe, 2nd Ed.* World Health Organization, Regional Office for Europe. Copenhagen, Denmark. 2000. pp. 219-229.

Studies performed in India in 1998 and 2002 both found that wheat plants exhibited yield decreases and other phytotoxic effects occurred when continuously exposed to SO_2 at a concentration of 160 µg/m^3. [9, 10]

An Australian study published in 1990 found that wheat plants did not exhibit any phytotoxic effects when intermittently exposed to SO_2 at a concentration of 11 µg/m^3 for a period of 79 days, but did exhibit phytotoxic effects at an SO_2 concentration of 112 µg/m^3 for the same duration. [11]

An American study published in 1987 found that yield of wheat plants was unaffected by intermittent exposure to SO_2 at concentrations as high as 966 µg/m^3 for a period of 36 days. The same findings were made at four different average ozone concentration levels ranging from 0.027 ppmv to 0.096 ppmv. In this study, the SO_2 exposure period was initiated after flowering of the wheat plants. [12]

An Australian study published in 1988 found that yield of wheat plants was unaffected by continuous exposure to SO_2 at concentrations as high as 267 µg/m^3 for a period of 90 days. [13]

A 1988 study performed for the California Air Resources Board found that wheat plants exhibited phytotoxic effects when continuously exposed to SO_2 at a concentration of 319 µg/m^3 under ambient humidity.[14]

A 1985 study performed for the California Air Resources Board found that wheat plants were adversely affected by continuous exposure to SO_2 at concentrations as low as 79 µg/m^3. [15]

A German study, published in 1968, evaluated 18 important agricultural crops for phytotoxic effects of long-term SO_2 exposure at varying concentrations. This study found that wheat plants are highly sensitive to SO_2 exposure, with a

---

[9] Agrawal, M., and S.S. Deepak. "Physiological and Biochemical Responses of Two Cultivars of Wheat to Elevated Levels of CO_2 and SO_2, Singly and in Combination." *Environmental Pollution.* Volume 121. 2003. pp. 189-197.
[10] Agrawal, M., and S.S. Deepak. "Growth and Yield Responses of Wheat Plants to Elevated Levels of CO_2 and SO_2, Singly and in Combination." *Environmental Pollution.* Volume 104. 1999. pp. 411-419.
[11] S.A. Wilson and F. Murray. "SO_2-Induced Growth Reductions and Sulphur Accumulation in Wheat." *Environmental Pollution.* Volume 66. 1990. pp. 179-191.
[12] R.J. Kohut et al. "Effects of Ozone and Sulfur Dioxide on Yield of Winter Wheat." *Phytopathology.* Volume 77. 1987. pp. 71-74.
[13] F. Murray and S.A. Wilson. "The Joint Action of Sulphur Dioxide and Hydrogen Fluoride on the Yield and Quality of Wheat and Barley." *Environmental Pollution.* Volume 55. 1988. pp. 239-249.
[14] Thompson, C.R., and D.M. Olszyk. *Interaction of Humidity and Air Pollutants on Vegetation.*
University of California. Riverside, CA. March 1988.
[15] Thompson, C.R. *Effects of SO_2 on Growth and Yield of Winter Crops Grown in California.* University of California. Riverside, CA. September 1985.

threshold average concentration of approximately 27 μg/m^3 for phytotoxic effects. [16]

A British study, published in 1988, found that barley plants exhibited phytotoxic effects when continuously exposed to SO_2 at mean concentrations ranging from 0.058 ppmv. When continuously exposed to SO_2 at a mean concentration of 0.023 ppmv, the barley plants did not exhibit any statistically significant effects.[17]

In summary, the scientific literature reviewed for the analysis indicate that the secondary NAAQS and the minimum U.S. EPA screening values are protective of the crops identified herein. The maximum predicted SO_2 concentrations for all averaging periods are well below the secondary NAAQS, the minimum U.S. EPA screening values, guideline concentration values established by foreign governmental agencies, and concentrations that are identified in the literature as being harmful to crops.

3.2 *NITROGEN OXIDES*

NO_X includes both nitric oxide (NO) and nitrogen dioxide (NO_2), and much of the scientific literature treats these two pollutants separately.

Based on the results of the air quality impacts analysis, the maximum predicted ambient NO_X concentration due to emissions from the HEC is 2.94 μg/m^3 (annual average). This value represents total NO_X, including both NO and NO_2. This conservative value is well below the secondary NAAQS of 100 μg/m^3 (annual average) and the minimum U.S. EPA screening value of 94 μg/m^3 (annual average). Both the secondary NAAQS and the screening value are expressed in terms of NO_2; there are no NAAQS or screening values for NO. [18] The agricultural crops for which the minimum U.S. EPA screening value is listed as being protective include alfalfa, barley, corn, oats, sorghum and wheat. [19] The crops identified in herein that are not specifically listed in the *Screening Procedures* report are apple and soybean.

ERM reviewed literature to ascertain whether there exists, in the scientific literature, any basis for concluding that: a) the secondary NAAQS and the minimum U.S. EPA screening value are not protective of any of the crops identified herein; or b) the HEC's NO_X emissions will have an unacceptable,

---

[16] Godzik, S., and S.V. Krupa. "Effects of Sulphur Dioxide on the Growth and Yield of Agricultural and Horticultural Crops." In *Effects of Gaseous Air Pollution in Agriculture and Horticulture.* M.H. Unsworth and D.P. Ormrod, eds. 1982.
[17] A. R. McLeod, T. M. Roberts, K. Alexander, D. M. Cribb. Effects of Open-Air Fumigation with Sulphur Dioxide on the Growth and Yield of Winter Barley *New Phytologist*, Vol. 109, No. 1 (May, 1988), pp. 67-78
[18] Smith, A.E., J.B. Levenson. *A Screening Procedure for the Impacts of Air Pollution Sources on Plants, Soils, and Animals (EPA-450/2-81-078).* U.S. EPA, Office of Air Quality Planning and Standards. Research Triangle Park, NC. December 1980. p. 11.
[19] Ibid. p. 61.

adverse impact on agricultural crops grown near the HEC site. A summary of our findings follows.

In 2000, the WHO instituted a NO_X guideline concentration value of 30 µg/m^3 on an annual average (including both NO and NO_2, expressed as NO_2). The WHO declined to institute a short-term value, saying "[t]here are insufficient data to provide these levels with confidence at present," but indicated that current evidence would suggest a guideline NO_X concentration value of about 75 µg/m^3 on a daily average. The guideline concentration value is intended to be protective of all classes of vegetation under all environmental conditions. [20]

A Swiss study published in 1995 found that wheat plants exhibited no phytotoxic effects due to long-term exposure to NO at a concentration of 86 µg/m^3 (132 µg/m^3 as NO_2) in the presence of ambient ozone levels (long-term mean approximately 0.04 ppmv), or due to long-term exposure to NO at a concentration of 50 µg/m^3 (77 µg/m^3 as NO_2) in the presence of elevated ozone levels (long-term mean approximately 0.06 ppmv). [21]

An American study published in 1987 found that wheat plants exhibited slight phytotoxic effects when intermittently exposed to NO_X at a concentration of 150 µg/m^3 for a period of 38 days. [22]

A German study published in 1975 found that wheat plants did not exhibit any phytotoxic effects when intermittently exposed to NO_X at concentrations as high as 1,900 µg/m^3 for a period of 40 days. [23]

In summary, the scientific literature reviewed indicates that the secondary NAAQS and the minimum annual U.S. EPA screening value are protective of the crops identified herein. The maximum predicted NO_X concentration is well below the secondary NAAQS, the minimum U.S. EPA screening value, guideline concentration values established by foreign governmental agencies, and concentrations that are identified in the literature as being harmful to crops.

---

[20] *Air Quality Guidelines for Europe, 2nd Ed.* World Health Organization, Regional Office for Europe. Copenhagen, Denmark. 2000. pp. 230-233.
[21] Nussbaum, S., et al. "Effects of Nitric Oxide and Ozone on Spring Wheat (*Triticum aestivum*). *Water, Air & Soil Pollution*. Volume 85. 1995. pp. 1449-1454.
[22] *Air Quality Criteria for Oxides of Nitrogen. Volume II of III. (EPA-600/8-91-049b).* U.S. EPA, Office of Research and Development, Environmental Criteria and Assessment Office. Research Triangle Park, NC. August 1993. p. 9B-10.
[23] *Air Quality Criteria for Oxides of Nitrogen. Volume II of III. (EPA-600/8-91-049b).* U.S. EPA, Office of Research and Development, Environmental Criteria and Assessment Office. Research Triangle Park, NC. August 1993. p. 9B-9.

3.3 *AMMONIA*

Based on the results of the air quality impacts analysis, the maximum predicted ambient NH_3 concentration due to emissions from the HEC is 0.53µg/m^3 (annual average). There are no NAAQS or U.S. EPA screening values for NH_3.

ERM reviewed literature to ascertain whether there exists, in the scientific literature, any basis for concluding that the HEC's NH_3 emissions will have an unacceptable, adverse impact on agricultural crops grown near the HEC site. A summary of findings follows.

In 2000, the WHO instituted a NH_3 guideline concentration value of 8 µg/m^3 (annual average). They declined to institute a short-term value, saying "[t]here are insufficient data to provide these levels with confidence at present," but indicated that current evidence would suggest a guideline NH_3 concentration value of about 270 µg/m^3 on a daily average. The guideline concentration value is intended to be protective of all classes of vegetation under all environmental conditions. [24]

A Dutch study published in 1995 found that wheat plants exhibited increased yield and no phytotoxic effects as a result of exposure to NH_3 at a concentration of 1,100 µg/m^3 for a period of 36 days, including 14 days at moderate temperature and 22 days at low temperature. [25]

A German study published in 1990 found that spinach plants exhibited phytotoxic effects as a result of exposure to NH_3 at a concentration of 2,000 µg/m^3 for a period of 14 days; at an NH_3 concentration of 5,000 µg/m^3, spinach plants were found to exhibit phytotoxic effects beginning after 2.5 days of exposure. [26]

In summary, the scientific literature identified during this review indicates that the HEC's NH_3 emissions will not have an unacceptable, adverse impact on agricultural crops grown near the HEC site. The maximum predicted NH_3 concentration is well below guideline concentration values established by foreign governmental agencies and concentrations that are identified in the literature as being harmful to crops.

3.4 *ANTIMONY*

The maximum predicted deposition rate of antimony is 479 mg/ha·yr, the maximum 100-year deposition is 47,900 mg/ha, and the maximum 100-year

---

[24] *Air Quality Guidelines for Europe, 2nd Ed.* World Health Organization, Regional Office for Europe. Copenhagen, Denmark. 2000. pp. 230-233.
[25] Clement, J.M.A.M., et al. "Short-term Exposure to Atmospheric Ammonia Does Not Affect Low-temperature Hardening of Winter Wheat." *New Phytologist.* Volume 131. 1995. pp. 345-351.
[26] A. Fangmeier. "Effects of Atmospheric Ammonia on Vegetation – A Review." *Environmental Pollution.* Volume 86. 1994. pp. 43-82.

increase in soil concentration is 0.060 ppmw. There are no NAAQS or U.S. EPA screening values for antimony.

ERM reviewed literature to ascertain whether there exists any basis for concluding that the HEC's emissions of antimony will have an unacceptable phytotoxic impact on agricultural crops grown near the HEC site or an unacceptable risk of human health effects due to antimony uptake by agricultural crops. A summary of findings follows.

Naturally occurring antimony concentrations in soils are generally in the range of less than 1.0 ppmw to 8.8 ppmw.[27]

In 2002, the WHO adopted a maximum soil concentration screening value of 35.70 ppmw for antimony. [28] In 1997, the U.S. Department of Energy instituted a soil concentration screening value of 5 ppmw for antimony.[29]

A British study published in 1984 found that no critical concentration of antimony could be determined that causes phytotoxicity in barley plants. [30]

No other reports in the scientific literature reviewed identified phytotoxic affects any of the crops detailed in this report to exposure to antimony in the soils.

In summary, the scientific literature identified during this review indicates that the HEC's antimony`emissions will not have an unacceptable, adverse impact on agricultural crops grown near the HEC site. Thus, ERM has concluded that the maximum predicted antimony deposition rate will not lead to soil concentrations that are identified in the literature as being harmful to crops or to people that consume the crops.

3.5 *ARSENIC*

The maximum predicted deposition rate of arsenic is 785 mg/ha·yr, the maximum 100-year deposition is 78,500 mg /ha, and the maximum 100-year increase in soil concentration is 0.098 parts per million by weight (ppmw). The

---

[27] H.T.Shacklette and J.G. Boerngen *Element Concentrations in Soils and other Surficial Materials of the United States (USGS PP 1270).* U.S. Geological Survey. Washington D.C. 1984. p.4.

[28] A.C. Chang, et al. *Developing Human Health-related Chemical Guidelines for Reclaimed Water and Sewage Sludge Applications in Agriculture.* World Health Organization. Copenhagen, Denmark. May 2002. pp. iv and 71.

[29] R.A. Efroymson et al. *Toxicological Benchmarks for Screening Contaminants of Potential Concern for Effects on Terrestrial Plants: 1997 Revision.* U.S. Department of Energy, Office of Environmental Management. Oak Ridge, TN. 1997. p. 2-5.

[30] R. D. Macnicol and P. H. T. Beckett. Critical tissue concentrations of potentially toxic elements. *Plant and Soil*. Volume 85. pp 107-129.

concentration value is below the minimum U.S. EPA screening value of 3 ppmw. [31] There is no NAAQS screening value for arsenic.

ERM reviewed the scientific literature to ascertain whether there exists any basis for concluding that the HEC's emissions of arsenic will have an unacceptable phytotoxic impact on agricultural crops grown near the HEC site or an unacceptable risk of human health effects due to arsenic uptake by agricultural crops. A summary of findings follows.

Naturally occurring arsenic concentrations in soils are generally in the range of less than 0.1 ppmw to 97 ppmw.[32]

In 2002, the WHO adopted a maximum soil concentration screening value of 8.14 ppmw for arsenic. [33]

In 1997, the U.S. Department of Energy instituted a soil concentration screening value of 10 ppmw for arsenic. [34] This value is based on phytotoxicity of several plants, including rice, [35] and represents the concentration that the authors consider adequate to ensure that no phytotoxic effects will occur in terrestrial plants grown in soil.

An American study published in 1972 found soybean yields were significantly reduced when grown in soil suspension of sandy loam soils with an arsenic concentration of 11 ppmw. When grown in black clay soils, the same soybean yield was only slightly reduced when grown with an arsenic concentration of 22.4 ppmv. [36]

Another study published in 1971 found that corn plants did not exhibit any phytotoxic effects when grown in soil with an arsenic concentration as high as 10 ppmw, but did exhibit significant phytotoxic effects at a arsenic concentration of 100 ppmw. [37]

---

[31] A.E. Smith and J.B. Levenson. *A Screening Procedure for the Impacts of Air Pollution Sources on Plants, Soils, and Animals (EPA-450/2-81-078).* U.S. EPA, Office of Air Quality Planning and Standards. Research Triangle Park, NC. December 1980. p. 17.
[32] H.T.Shacklette and J.G. Boerngen *Element Concentrations in Soils and other Surficial Materials of the United States (USGS PP 1270).* U.S. Geological Survey. Washington D.C. 1984. p.4.
[33] A.C. Chang, et al. *Developing Human Health-related Chemical Guidelines for Reclaimed Water and Sewage Sludge Applications in Agriculture.* World Health Organization. Copenhagen, Denmark. May 2002. pp. iv and 71.
[34] R.A. Efroymson et al. *Toxicological Benchmarks for Screening Contaminants of Potential Concern for Effects on Terrestrial Plants: 1997 Revision.* U.S. Department of Energy, Office of Environmental Management. Oak Ridge, TN. 1997. p. 2-5.
[35] Ibid. pp. 3-3 through 3-5.
[36] Deuel, L. E. and A. R. Swoboda. 1972. Arsenic toxicity to cotton and soybeans. *J. Environ. Qual.*1:317-20.
[37] Woolson, E. A., J. H. Axley, and P. C. Kearney. 1971. Correlation between available soil arsenic, estimated by six methods and response of corn (*Zea mays* L.). *Soil Sci. Soc. Am. Proc.*35:101–105..

A Norwegian study published in 1994 found that barley plants did not exhibit any phytotoxic effects when grown in soil with an arsenic concentration as high as 10 ppmw, but did exhibit significant phytotoxic effects at a arsenic concentration of 50 ppmw. [38]

In summary, the scientific literature identified during this review indicates that the HEC's arsenic emissions will not have an unacceptable, adverse impact on agricultural crops grown near the HEC site. Thus, ERM has concluded that the maximum predicted arsenic deposition rate will not lead to soil concentrations that are identified in the literature as being harmful to crops or to people that consume these crops.

3.6 *CADMIUM*

The maximum predicted deposition rate of cadmium is 387 mg /ha·yr, the maximum 100-year deposition is 38,700 mg /ha, and the maximum 100-year increase in soil concentration is 0.048 ppmw. The concentration value is below the minimum U.S. EPA screening value of 2.5 ppmw. [39] There are no NAAQS for cadmium.

ERM reviewed literature to ascertain whether there exists, in the scientific literature, any basis for concluding that the refinery's emissions of cadmium will have an unacceptable phytotoxic impact on agricultural crops grown near the HEC site or an unacceptable risk of human health effects due to aluminum uptake by agricultural crops. A summary of findings follows.

In general, cadmium is one of the primary metals of concern in soils used for agricultural crop production due to its relative ease of uptake by plants and its high level of toxicity to humans. [40,41 42] Unlike other metals, cadmium can be

---

[38] Woolson, E. A., J. H. Axley, and P. C. Kearney. 1971. Correlation between available soil arsenic, estimated by six methods and response of corn (*Zea mays* L.). *Soil Sci. Soc. Am. Proc.*35:101–105..

[39] A.E. Smith and J.B. Levenson. *A Screening Procedure for the Impacts of Air Pollution Sources on Plants, Soils, and Animals (EPA-450/2-81-078).* U.S. EPA, Office of Air Quality Planning and Standards. Research Triangle Park, NC. December 1980. p. 17.

[40] M.P.C. de Vries and K.G. Tiller. "The Effect of Sludges from Two Adelaide Sewage Treatment Plants on the Growth of and Heavy Metal Concentrations in Lettuce." *Australian Journal of Experimental Agriculture and Animal Husbandry.* Volume 18. February 1978. pp. 143-147.

[41] A.C. Chang, et al. *Developing Human Health-related Chemical Guidelines for Reclaimed Water and Sewage Sludge Applications in Agriculture.* World Health Organization. Copenhagen, Denmark. May 2002. p. 62.

[42] S.J. Kim et al. "Relative Concentrations of Cadmium and Zinc in Tissue of Selected Food Plants Grown on Sludge-Treated Soils." *Journal of Environmental Quality.* Volume 17. 1988. pp. 568-573.

accumulated in several food crops at levels that are potentially hazardous to human health without the plants first suffering severe phytotoxic effects. [43]

Naturally occurring cadmium concentrations in soils are generally in the range 0.01 ppmw to 2.7 ppmw, with a typical concentration of 0.4 ppmw. [44]

In 2002, the WHO adopted a maximum soil concentration screening value of 3.92 ppmw for cadmium. [45] In establishing this value, the organization identified guideline values established by thirteen different governments, including the U.S. and the European Union. The most stringent limit is a total deposition threshold of 0.4 kg/ha, established by the governments of Denmark and Sweden. [46] This limit is approximately 10 times the maximum deposition expected from the HEC over a 100-year period.

In 1997, the U.S. Department of Energy instituted a soil concentration screening value of 4 ppmw for cadmium. [47] This value is based on phytotoxicity of several plants, including soybean and corn, [48] and represents the concentration that the authors consider adequate to ensure that no phytotoxic effects will occur in terrestrial plants grown in soil.

In Canada, the maximum acceptable level for cumulative cadmium additions to soil is 4 kg/ha. [49] This standard, which was initially adopted in 1979 and was most recently reaffirmed in 1997, is intended to protect against risk to humans, plants, and animals. [50] The Canadian standard is approximately 500 times the maximum deposition expected from the HEC over a 100-year period.

In 1993, in the context of its regulations governing land application of sewage sludge, the U.S. EPA established a maximum cumulative loading limit for cadmium of 39 kg/ha. This limit is based on the level that was found to be safe for a child ingesting biosolids, which is the most restrictive of all exposure pathways evaluated. For the "human home gardener" exposure pathway, assuming a lifetime of eating vegetables grown in cadmium-contaminated soil,

---

[43] *Use of Reclaimed Water and Sludge in Food Crop Production.* National Research Council, Water Science and Technology Board. Washington, DC. 1996. p. 109.
[44] A.C. Chang, et al. *Developing Human Health-related Chemical Guidelines for Reclaimed Water and Sewage Sludge Applications in Agriculture.* World Health Organization. Copenhagen, Denmark. May 2002. p. 27.
[45] A.C. Chang, et al. *Developing Human Health-related Chemical Guidelines for Reclaimed Water and Sewage Sludge Applications in Agriculture.* World Health Organization. Copenhagen, Denmark. May 2002. pp. iv and 71.
[46] Ibid. p. 31.
[47] R.A. Efroymson et al. *Toxicological Benchmarks for Screening Contaminants of Potential Concern for Effects on Terrestrial Plants: 1997 Revision.* U.S. Department of Energy, Office of Environmental Management. Oak Ridge, TN. 1997. p. 2-5.
[48] Ibid. pp. 3-8 through 3-10.
[49] *Guidelines to the Fertilizers Act and Regulations, 2nd Ed.* Agriculture and Agri-Food Canada. Nepean, Ontario, Canada. November 1996. p. 3-3.
[50] Ibid.

U.S. EPA determined that the maximum cumulative loading limit would be 120 kg/ha. A loading limit based on phytotoxicity was not determined. [51]

A Korean study presented in 2002 found that lettuce plants did not exhibit any phytotoxic effects when grown in soil with a cadmium concentration as high as 10 ppmw, but did exhibit significant phytotoxic effects at a cadmium concentration of 25 ppmw. [52]

A study commissioned by the Washington State Department of Agriculture and published in 2001 found that yield of wheat plants was not affected by addition of cadmium to soil at rates as high as 3.6 kg/ha. This was the highest cadmium addition rate evaluated. [53]

A Japanese study published in 1990 found that yield of wheat plants did not exhibit phytotoxic effects when grown in soil containing cadmium at a concentration of 10 ppmw but did exhibit phytotoxic effects when grown in soil containing cadmium at concentrations of 30 ppmw or higher. [54]

An American study published in 1978 found that wheat plants exhibited no phytotoxic effects with a soil cadmium concentration as high as 20 ppmw, but did exhibit phytotoxic effects at a cadmium concentration of 40 ppmw or higher. This result was consistent using both acidic and calcareous soils. [55]

An American study published in 1979 found that soil cadmium concentrations of 10 ppmw produced significant phytotoxic effects in soybeans, while no noticeable phytotoxic effects were seen with a soil concentration of 5 ppmw cadmium. [56]

An American study published in 1973 found that yield of wheat plants was slightly reduced by soil cadmium concentrations as low as 2.5 ppmw. [57]

In summary, the scientific literature identified during this review indicates that the HEC's cadmium emissions will not have an unacceptable, adverse impact on agricultural crops grown near the HEC site or on human health effects due to

---

[51] *A Guide to the Biosolids Risk Assessments for the EPA Part 503 Rule* (EPA-832/B-93-005). U.S. EPA, Office of Water Management. Washington, DC. September 1995. pp. 82-99.
[52] Kim Won-Il et al. "Effect of Cadmium and Arsenic in Soils on Growth and Availability to Vegetables." Presented at the *17th World Congress of Soil Science*. Bangkok, Thailand. August 2002.
[53] *A Report on the Plant Uptake of Metals from Fertilizers*. Washington State Department of Agriculture. December 2001.
[54] S. Muramoto et al. "The Critical Levels and the Maximum Metal Uptake for Wheat and Rice Plants when Appling Metal Oxides to Soil." *Journal of Environmental Science and Health, Part B*. Volume 25. 1990. pp. 273-280.
[55] Ibid.
[56] Strickland, R. C., W. R. Chaney, and R. J. Lamoreaux. 1979. Organic matter influences phytotoxicity of cadmium to soybeans. *Plant Soil* 53(3):393-402.
[57] F. Haghiri. "Cadmium Uptake by Plants." *Journal of Environmental Quality*. Volume 2. 1973. pp. 93-95.

uptake by crops. Therefore, ERM has concluded that the maximum predicted cadmium deposition rate will not lead to soil concentrations that are identified in the literature as being harmful to crops or to people that consume these crops.

3.7 *CHROMIUM*

The maximum predicted deposition rate of total chromium is 1,015 mg /ha·yr, the maximum 100-year deposition is 101,500 mg /ha, and the maximum 100-year increase in soil concentration is 0.127 ppmw. The concentration value is below the minimum U.S. EPA screening value of 8.4 ppmw.[58] There are no NAAQS for chromium.

ERM reviewed literature to ascertain whether there exists, in the scientific literature, any basis for concluding that the HEC's emissions of chromium will have an unacceptable phytotoxic impact on agricultural crops grown near the HEC site or an unacceptable risk of human health effects due to chromium uptake by agricultural crops. A summary of findings follows.

Naturally occurring chromium concentrations in soils are generally in the range 1 ppmw to 1,400 ppmw, with a typical concentration of 55 ppmw.[59, 60]

In 2002, the WHO adopted a maximum permissible soil concentration values for several pollutants, but did not establish one for chromium.[61] However, in its review, the organization identified guideline values established by eight different governments, including the European Union. The most stringent of these is a total deposition threshold of 60 kg/ha, established by four different governments.[62] This limit is nearly 2,000 times the maximum deposition expected from the HEC over a 100-year period.

In 1997, the U.S. Department of Energy instituted a soil concentration screening value of 1 ppmw for chromium.[63] This value is based on phytotoxicity of several plants, including soybean and oat,[64] and represents the concentration

---

[58] A.E. Smith and J.B. Levenson. *A Screening Procedure for the Impacts of Air Pollution Sources on Plants, Soils, and Animals (EPA-450/2-81-078).* U.S. EPA, Office of Air Quality Planning and Standards. Research Triangle Park, NC. December 1980. p. 17.
[59] A.C. Chang, et al. *Developing Human Health-related Chemical Guidelines for Reclaimed Water and Sewage Sludge Applications in Agriculture.* World Health Organization. Copenhagen, Denmark. May 2002. p. 27.
[60] P.F. Pratt. "Chromium." In *Diagnostic Criteria for Plants and Soils. University of California, Division of Agricultural Sciences*. H.D. Chapman, ed. Riverside, CA. 1966. p. 136.
[61] A.C. Chang, et al. *Developing Human Health-related Chemical Guidelines for Reclaimed Water and Sewage Sludge Applications in Agriculture.* World Health Organization. Copenhagen, Denmark. May 2002. pp. iv and 71.
[62] Ibid. p. 31.
[63] R.A. Efroymson et al. *Toxicological Benchmarks for Screening Contaminants of Potential Concern for Effects on Terrestrial Plants: 1997 Revision.* U.S. Department of Energy, Office of Environmental Management. Oak Ridge, TN. 1997. p. 2-5.
[64] Ibid. pp. 3-12 through 3-13.

that the authors consider adequate to ensure that no phytotoxic effects will occur in terrestrial plants grown in soil.

In 1997, the National Park Service (within the U.S. Department of the Interior) reported that the maximum acceptable concentration of hexavalent chromium in soils used for production of food is 0.05 ppmw. [65]

In 1993, in the context of its regulations governing land application of sewage sludge, the U.S. EPA established a maximum cumulative loading limit for chromium of 3,000 kg/ha. This limit is based on the level that was found to be adequate for avoiding phytotoxic effects, which is the most restrictive of all exposure pathways evaluated. For the "human home gardener" exposure pathway, assuming a lifetime of eating vegetables grown in chromium-contaminated soil, U.S. EPA did not identify a maximum cumulative loading limit; however, for the "child eating sewage sludge" exposure pathway, U.S. EPA determined that the maximum cumulative loading limit would be 79,000 kg/ha. [66]

A Dutch study published in 1989 found that oat plants may exhibit phytotoxic effects when grown in loam with a chromium concentration as low as 7.4 ppmw; significant phytotoxic effects (representing reduced shoot weight) were observed at a chromium concentration of 1.8 ppmw. In the same study no phytotoxic effects were seen when oats were grown in a concentration of 3.5 ppmw. [67]

An American study published in 1971 found soybean plants did not exhibit any phytotoxic effects when grown in soil with chromium concentrations up to and including 10 ppmw; slight phytotoxic effects were observed at a chromium concentration of 30 ppmw. [68]

In summary, the scientific literature identified during this review indicates that the HEC's chromium emissions will not have an unacceptable, adverse impact on agricultural crops grown near the HEC site or an unacceptable risk of human health effects due to chromium uptake by agricultural crops. Thus, ERM has concluded that the maximum predicted chromium deposition rate will not lead to soil concentrations that are identified in the literature as being harmful to crops or to people that consume these crops.

---

[65] R.J. Irwin et al. *Environmental Contaminants Encyclopedia – Chromium (in General) Entry.* U.S. Department of Energy, National Park Service, Water Resources Division, Water Operations Branch. Fort Collins, CO. July 1997. pp. 50-51.
[66] *A Guide to the Biosolids Risk Assessments for the EPA Part 503 Rule* (EPA-832/B-93-005). U.S. EPA, Office of Water Management. Washington, DC. September 1995. pp. 82-99.
[67] D.M.M. Adema and L. Henzen. "A Comparison of Plant Toxicities of Some Industrial Chemicals in Soil Culture and Soilless Culture." *Ecotoxicology and Environmental Safety.* Volume 18. 1989. pp. 219-229.
[68] Turner, M. A. and R. H. Rust. 1971. Effects of chromium on growth and mineral nutrition of soybeans. *Soil Sci. Soc. Am. Proc.* 35:755-58.

3.8 *COBALT*

The maximum predicted deposition rate of cobalt is 224 mg /ha·yr, the maximum 100-year deposition is 22,400 mg /ha, and the maximum 100-year increase in soil concentration is 0.028 ppmw. There are no NAAQS or U.S. EPA screening values for cobalt.

ERM reviewed literature to ascertain whether there exists any basis for concluding that the HEC's emissions of cobalt will have an unacceptable phytotoxic impact on agricultural crops grown near the HEC site or an unacceptable risk of human health effects due to cobalt uptake by agricultural crops. A summary of findings follows.

Naturally occurring cobalt concentrations in soils are generally in the range of less than 3 ppmw to 70 ppmw.[69]

In 1997, the U.S. Department of Energy instituted a soil concentration screening value of 20 ppmw for cobalt. [70] This value represents the concentration that the authors consider adequate to ensure that no phytotoxic effects will occur in terrestrial plants grown in soil.

An Australian study published in 1973 examined the existing concentrations of cobalt of 0.03 ppmw to 0.14 ppmw within an oat field. These levels were found to be one-tenth the concentration of cobalt that exhibited phytotoxic reactions in oat plants. [71]

In summary, the scientific literature identified during this review indicates that the HEC's cobalt emissions will not have an unacceptable, adverse impact on agricultural crops grown near the HEC site. Thus, ERM has concluded that the maximum predicted cobalt deposition rate will not lead to soil concentrations that are identified in the literature as being harmful to crops or to people that consume these crops.

3.9 *COPPER*

The maximum predicted deposition rate of copper is 2,321 mg /ha·yr, the maximum 100-year deposition is 232,100 mg/ha, and the maximum 100-year increase in soil concentration is 0.290 ppmw. The concentration value is below

---

[69] H.T.Shacklette and J.G. Boerngen *Element Concentrations in Soils and other Surficial Materials of the United States (USGS PP 1270).* U.S. Geological Survey. Washington D.C. 1984. p.4.

[70] R.A. Efroymson et al. *Toxicological Benchmarks for Screening Contaminants of Potential Concern for Effects on Terrestrial Plants: 1997 Revision.* U.S. Department of Energy, Office of Environmental Management. Oak Ridge, TN. 1997. p. 2-5.

[71] Anderson AJ, Meyer DR, Mayer FK (1973) Heavy metal toxicities: levels of nickel, cobalt and chromium in the soil and plants associated with visual symptoms and variation in growth of an oat crop. *Australian Journal of Agricultural Research* **24**, 557–571.

the minimum U.S. EPA screening value of 40 ppmw.[72] There are no NAAQS for copper.

ERM reviewed literature to ascertain whether there exists any basis for concluding that the HEC's emissions of copper will have an unacceptable phytotoxic impact on agricultural crops grown near the HEC site or an unacceptable risk of human health effects due to copper uptake by agricultural crops. A summary of findings follows.

Copper is an essential nutrient for most plants.[73] Naturally occurring copper concentrations in soils are generally in the range 1 ppmw to 300 ppmw, with a typical concentration of 22 ppmw.[74, 75]

In 2002, the WHO adopted a maximum permissible soil concentration values for several pollutants, but did not establish one for copper.[76] However, in its review, the organization identified guideline values established by thirteen different governments, including the European Union. The most stringent of these is a total deposition threshold of 40 kg/ha, established by the governments of Denmark and Sweden.[77] This limit is nearly 3,000 times the maximum deposition expected from the HEC over a 100-year period.

In 1997, the U.S. Department of Energy instituted a soil concentration screening value of 100 ppmw for copper.[78] This value is primarily based on phytotoxicity of little bluestem[79] and represents the concentration that the authors consider adequate to ensure that no phytotoxic effects will occur in terrestrial plants grown in soil.

In 1997, the National Park Service (within the U.S. Department of the Interior) reported the following with respect to copper contamination of soils:

---

[72] A.E. Smith and J.B. Levenson. *A Screening Procedure for the Impacts of Air Pollution Sources on Plants, Soils, and Animals (EPA-450/2-81-078).* U.S. EPA, Office of Air Quality Planning and Standards. Research Triangle Park, NC. December 1980. p. 17.
[73] W. Reuther and C.K. Labanauskas. "Copper." In *Diagnostic Criteria for Plants and Soils. University of California, Division of Agricultural Sciences.* H.D. Chapman, ed. Riverside, CA. 1966. p. 165.
[74] A.C. Chang, et al. *Developing Human Health-related Chemical Guidelines for Reclaimed Water and Sewage Sludge Applications in Agriculture.* World Health Organization. Copenhagen, Denmark. May 2002. p. 27.
[75] W. Reuther and C.K. Labanauskas. "Copper." In *Diagnostic Criteria for Plants and Soils. University of California, Division of Agricultural Sciences.* H.D. Chapman, ed. Riverside, CA. 1966. p. 165.
[76] A.C. Chang, et al. *Developing Human Health-related Chemical Guidelines for Reclaimed Water and Sewage Sludge Applications in Agriculture.* World Health Organization. Copenhagen, Denmark. May 2002. pp. iv and 71.
[77] Ibid. p. 31.
[78] R.A. Efroymson et al. *Toxicological Benchmarks for Screening Contaminants of Potential Concern for Effects on Terrestrial Plants: 1997 Revision.* U.S. Department of Energy, Office of Environmental Management. Oak Ridge, TN. 1997. p. 2-5.
[79] Ibid. p. 3-15.

- The maximum acceptable concentration of copper in soils used for production of food is 23 ppmw; [80]
- Seven states were identified as having standards limiting the cumulative application of copper to soils. While no standard limits were identified for South Dakota, the most stringent of the identified standards is 84 kg/ha, for agricultural soils in New York State; [81] and
- No adverse human health effects are expected for humans, including children, residing adjacent to soil containing copper at a concentration of 74 ppmw. [82]

In 1993, in the context of its regulations governing land application of sewage sludge, the U.S. EPA established a maximum cumulative loading limit for copper of 1,500 kg/ha. This limit is based on the level that was found to be adequate for avoiding phytotoxic effects, which is the most restrictive of all exposure pathways evaluated. For the "human home gardener" exposure pathway, assuming a lifetime of eating vegetables grown in copper-contaminated soil, U.S. EPA did not identify a maximum cumulative loading limit; however, for the "child eating sewage sludge" exposure pathway, U.S. EPA determined that the maximum cumulative loading limit for copper would be 10,000 kg/ha. [83]

An Australian study published in 1973 examined the existing concentrations of copper of 0.01 ppmw to 0.02 ppmw within an oat field. These levels were found to be one-one hundredth the concentration of copper that exhibited phytotoxic reactions in oat plants. [84]

An American study published in 1978 found that wheat plants exhibited no phytotoxic effects when grown in acid soil (fine sandy loam, pH 5.7) with a copper concentration as high as 80 ppmw, but did exhibit phytotoxic effects at a copper concentration of 160 ppmw or higher. In calcareous soil (silt loam, pH 7.5), the wheat plants exhibited no phytotoxic effects up to a copper concentration of 160 ppmw, but did exhibit phytotoxic effects at a copper concentration of 320 ppmw or higher. [85]

In summary, the scientific literature identified during this review indicates that the HEC's copper emissions will not have an unacceptable, adverse impact on

---

[80] R.J. Irwin et al. *Environmental Contaminants Encyclopedia – Copper Entry.* U.S. Department of Energy, National Park Service, Water Resources Division, Water Operations Branch. Fort Collins, CO. July 1997. p. 48.
[81] Ibid. pp. 45-46.
[82] Ibid. p. 49.
[83] *A Guide to the Biosolids Risk Assessments for the EPA Part 503 Rule* (EPA-832/B-93-005). U.S. EPA, Office of Water Management. Washington, DC. September 1995. pp. 82-99.
[84] Anderson AJ, Meyer DR, Mayer FK (1973) Heavy metal toxicities: levels of nickel, cobalt and chromium in the soil and plants associated with visual symptoms and variation in growth of an oat crop. *Australian Journal of Agricultural Research* **24**, 557–571.
[85] Ibid.

agricultural crops grown near the HEC site or an unacceptable risk of human health effects due to copper uptake by agricultural crops. Thus, ERM has concluded that the maximum predicted copper deposition rate will not lead to soil concentrations that are identified in the literature as being harmful to crops or to people that consume these crops.

3.10 *FLUORIDE*

The maximum predicted deposition rate of fluoride is 90 mg /ha·yr, the maximum 100-year deposition is 9,000 mg /ha, and the maximum 100-year increase in soil concentration is 0.011 parts per million by weight (ppmw). There are no NAAQS or U.S. EPA screening values for fluoride.

ERM reviewed literature to ascertain whether there exists any basis for concluding that the HEC's emissions of fluoride will have an unacceptable phytotoxic impact on agricultural crops grown near the HEC site or an unacceptable risk of human health effects due to fluoride uptake by agricultural crops. A summary of findings follows.

Naturally occurring fluoride concentrations in soils are generally in the range of less than 10 ppmw to 3,700 ppmw.[86]

In summary, the scientific literature identified during this review indicates that the HEC's fluoride emissions will not have an unacceptable, adverse impact on agricultural crops grown near the HEC site. Thus, ERM has concluded that the maximum predicted fluoride deposition rate will not lead to soil concentrations that are identified in the literature as being harmful to crops or to people that consume these crops.

3.11 *LEAD*

The maximum predicted deposition rate of lead is 1,611 mg /ha·yr, the maximum 100-year deposition is 161,100 mg /ha, and the maximum 100-year increase in soil concentration is 0.201 ppmw. The concentration value is below the minimum U.S. EPA screening value of 1,000 ppmw.[87]

ERM reviewed literature to ascertain whether there exists any basis for concluding that the HEC's emissions of lead will have an unacceptable phytotoxic impact on agricultural crops grown near the HEC site or an unacceptable risk of human health effects due to lead uptake by agricultural crops. A summary of findings follows.

---

[86] H.T.Shacklette and J.G. Boerngen *Element Concentrations in Soils and other Surficial Materials of the United States (USGS PP 1270).* U.S. Geological Survey. Washington D.C. 1984. p.4.

[87] A.E. Smith and J.B. Levenson. *A Screening Procedure for the Impacts of Air Pollution Sources on Plants, Soils, and Animals (EPA-450/2-81-078).* U.S. EPA, Office of Air Quality Planning and Standards. Research Triangle Park, NC. December 1980. p. 17.

Naturally occurring lead concentrations in soils are generally in the range 1.5 ppmw to 700 ppmw, with a typical concentration of 25 ppmw. [88,89 90] However, most of this lead is insoluble and not available to plants; the typical concentration of "soluble" or "available" lead is in the range 0.05 ppmw to 5 ppmw. [91]

In 2002, the WHO adopted a maximum soil concentration screening value of 83.9 ppmw for lead. [92] In establishing this value, the organization identified guideline values established by thirteen different governments, including the U.S. and the European Union. The most stringent limit is a total deposition threshold of 40 kg/ha, established by the governments of Denmark and Sweden. [93] This limit is more than 1,000 times the maximum deposition expected from the refinery over a 100-year period.

In Canada, the maximum acceptable level for cumulative lead additions to soil is 100 kg/ha. [94] This standard, which was initially adopted in 1979 and was most recently reaffirmed in 1997, is intended to protect against risk to humans, plants, and animals. [95] The Canadian standard is nearly 3,000 times the maximum deposition expected from the refinery over a 100-year period.

In 1997, the U.S. Department of Energy instituted a soil concentration screening value of 50 ppmw for lead. [96] This value is primarily based on phytotoxicity in trees and crops, including, wheat and oat [97] and represents the concentration that the authors consider adequate to ensure that no phytotoxic effects will occur in terrestrial plants grown in soil.

In 1997, the National Park Service (within the U.S. Department of the Interior) reported the following with respect to lead contamination of soils:

---

[88] A.C. Chang, et al. *Developing Human Health-related Chemical Guidelines for Reclaimed Water and Sewage Sludge Applications in Agriculture.* World Health Organization. Copenhagen, Denmark. May 2002. p. 27.
[89] R.F. Brewer. "Lead." In *Diagnostic Criteria for Plants and Soils. University of California, Division of Agricultural Sciences.* H.D. Chapman, ed. Riverside, CA. 1966. p. 216.
[90] H.T.Shacklette and J.G. Boerngen *Element Concentrations in Soils and other Surficial Materials of the United States (USGS PP 1270).* U.S. Geological Survey. Washington D.C. 1984. p.4.
[91] Ibid.
[92] A.C. Chang, et al. *Developing Human Health-related Chemical Guidelines for Reclaimed Water and Sewage Sludge Applications in Agriculture.* World Health Organization. Copenhagen, Denmark. May 2002. pp. iv and 71.
[93] Ibid. p. 31.
[94] *Guidelines to the Fertilizers Act and Regulations, 2nd Ed.* Agriculture and Agri-Food Canada. Nepean, Ontario, Canada. November 1996. p. 3-3.
[95] Ibid.
[96] R.A. Efroymson et al. *Toxicological Benchmarks for Screening Contaminants of Potential Concern for Effects on Terrestrial Plants: 1997 Revision.* U.S. Department of Energy, Office of Environmental Management. Oak Ridge, TN. 1997. p. 2-5.
[97] Ibid. pp. 3-17 through 3-18.

- The maximum acceptable concentration of lead in soils used for production of food is 20 ppmw; [98]
- Seven states were identified as having standards limiting the cumulative application of lead to soils. While no standard limits were identified for South Dakota, the most stringent of the identified standards is 336 kg/ha, for agricultural soils in New York State; [99] and
- No adverse human health effects are expected for humans, including children, residing adjacent to soil containing lead at a concentration of 400 ppmw. [100]

In 1993, in the context of its regulations governing land application of sewage sludge, the U.S. EPA established a maximum cumulative loading limit for lead of 300 kg/ha. This limit is based on the level that was found to be safe for a child ingesting biosolids, which is the most restrictive of all exposure pathways evaluated. U.S. EPA did not identify maximum cumulative loading limits for the "child ingesting sewage sludge" exposure pathway or the "human home gardener" exposure pathway. [101]

A British study presented in 1984 found that oat and corn plants did not exhibit any phytotoxic effects when grown in soil with a total lead concentration of 100 ppmw and 125 ppmw, respectively. However, in the studies oat and corn plants did exhibit phytotoxicity when grown in soil with a total lead concentration of 500 ppmw and 250 ppmw, respectively. [102] Within the same study, wheat plants did not exhibit any phytotoxic effects when grown in soil with a total lead concentration of 500 ppmw, but did exhibit phytotoxicity when grown in soil with a total lead concentration of 1000 ppmw. [103]

A Japanese study published in 1990 found that yield of wheat plants did not exhibit phytotoxic effects when grown in soil containing lead at concentrations up to and including 3,000 ppmw but did exhibit phytotoxic effects when grown in soil containing lead at concentrations of 10,000 ppmw or higher. [104]

---

[98] R.J. Irwin et al. *Environmental Contaminants Encyclopedia – Lead Entry.* U.S. Department of Energy, National Park Service, Water Resources Division, Water Operations Branch. Fort Collins, CO. July 1997. p. 47.
[99] Ibid. pp. 43-45.
[100] Ibid. p. 47.
[101] *A Guide to the Biosolids Risk Assessments for the EPA Part 503 Rule* (EPA-832/B-93-005). U.S. EPA, Office of Water Management. Washington, DC. September 1995. pp. 82-99.
[102] Khan, D. H. and B. Frankland. 1983. Effects of cadmium and lead on radish plants with particular reference to movement of metals through soil profile and plant. *Plant Soil.* 70:335-345.
[103] Khan, D. H. and B. Frankland. 1983. Effects of cadmium and lead on radish plants with particular reference to movement of metals through soil profile and plant. *Plant Soil.* 70:335-345.
[104] S. Muramoto et al. "The Critical Levels and the Maximum Metal Uptake for Wheat and Rice Plants when Appling Metal Oxides to Soil." *Journal of Environmental Science and Health, Part B.* Volume 25. 1990. pp. 273-280.

In summary, the scientific literature identified during this review indicates that the HEC's lead emissions will not have an unacceptable, adverse impact on agricultural crops grown near the HEC site or an unacceptable risk of human health effects due to lead uptake by agricultural crops. Thus, ERM has concluded that the maximum predicted lead deposition rate will not lead to soil concentrations that are identified in the literature as being harmful to crops or to people that consume these crops.

3.12 *MANGANESE*

The maximum predicted deposition rate of manganese is 2,267 mg/ha·yr, the maximum 100-year deposition is 226,700 mg /ha, and the maximum 100-year increase in soil concentration is 0.283 ppmw. This concentration value is below the minimum U.S. EPA screening value of 2.5 ppmw.[105] There are no NAAQS for manganese.

ERM reviewed literature to ascertain whether there exists any basis for concluding that the HEC's emissions of manganese will have an unacceptable phytotoxic impact on agricultural crops grown near the HEC site or an unacceptable risk of human health effects due to manganese uptake by agricultural crops. A summary of findings follows.

Manganese is an essential nutrient for most plants.[106] Naturally occurring manganese concentrations in soils are generally in the range 20 ppmw to 10,000 ppmw, with a typical concentration of 1,000 ppmw.[107, 108]

In 1997, the U.S. Department of Energy instituted a soil concentration screening value of 500 ppmw for manganese.[109] This value is primarily based on phytotoxicity of bush beans[110] and represents the concentration that the authors consider adequate to ensure that no phytotoxic effects will occur in terrestrial plants grown in soil.

---

[105] A.E. Smith and J.B. Levenson. *A Screening Procedure for the Impacts of Air Pollution Sources on Plants, Soils, and Animals (EPA-450/2-81-078).* U.S. EPA, Office of Air Quality Planning and Standards. Research Triangle Park, NC. December 1980. p. 17.
[106] C.K. Labanauskas. "Manganese." In *Diagnostic Criteria for Plants and Soils. University of California, Division of Agricultural Sciences*. H.D. Chapman, ed. Riverside, CA. 1966. p. 272.
[107] A.C. Chang, et al. *Developing Human Health-related Chemical Guidelines for Reclaimed Water and Sewage Sludge Applications in Agriculture.* World Health Organization. Copenhagen, Denmark. May 2002. p. 27.
[108] C.K. Labanauskas. "Manganese." In *Diagnostic Criteria for Plants and Soils. University of California, Division of Agricultural Sciences*. H.D. Chapman, ed. Riverside, CA. 1966. p. 272.
[109] R.A. Efroymson et al. *Toxicological Benchmarks for Screening Contaminants of Potential Concern for Effects on Terrestrial Plants: 1997 Revision.* U.S. Department of Energy, Office of Environmental Management. Oak Ridge, TN. 1997. p. 2-5.
[110] Ibid. pp. 3-12 through 3-13.

An Australian study published in 1990 found that certain species of wheat plants are highly tolerant of manganese, with only slight phytotoxic effects when grown in soils with 4,000 ppmw manganese. However, in the same study three other species of wheat plants exhibited phytotoxic affects when grown in soils with manganese concentrations ranging from 90 ppmw to 180 ppmw. [111]

In summary, the scientific literature identified during this review indicates that the HEC's manganese emissions will not have an unacceptable, adverse impact on agricultural crops grown near the HEC site or an unacceptable risk of human health effects due to manganese uptake by agricultural crops. Thus, ERM has concluded that the maximum predicted manganese deposition rate will not lead to soil concentrations that are identified in the literature as being harmful to crops or to people that consume affected crops.

3.13 *MERCURY*

The maximum predicted deposition rate of mercury is 211 mg /ha·yr, the maximum 100-year deposition is 21,100 mg /ha, and the maximum 100-year increase in soil concentration is 0.026 ppmw. This concentration value is below the minimum U.S. EPA screening value of 455 ppmw. [112] There are no NAAQS for mercury.

ERM reviewed literature to ascertain whether there exists any basis for concluding that the HEC's emissions of mercury will have an unacceptable phytotoxic impact on agricultural crops grown near the HEC site or an unacceptable risk of human health effects due to mercury uptake by agricultural crops. A summary of findings follows.

Naturally occurring mercury concentrations in soils are generally in the range 0.004 ppmw to 4.6 ppmw, with a typical concentration of 0.08 ppmw. [113], [114]

In 2002, the WHO adopted a maximum soil concentration screening value of 7.41 ppmw for mercury. [115] In establishing this value, the organization identified guideline values established by ten different governments, including the

---

[111] Burke, D.G., Watkins, K., Scott, B.J. Manganese toxicity effects on visible symptoms, yield, manganese levels, and organic acid levels in tolerant and sensitive wheat cultivars. *Crop Science* ; Vol/Issue: 30:2. 1990. pp. 275-280.
[112] A.E. Smith and J.B. Levenson. *A Screening Procedure for the Impacts of Air Pollution Sources on Plants, Soils, and Animals (EPA-450/2-81-078).* U.S. EPA, Office of Air Quality Planning and Standards. Research Triangle Park, NC. December 1980. p. 17.
[113] A.C. Chang, et al. *Developing Human Health-related Chemical Guidelines for Reclaimed Water and Sewage Sludge Applications in Agriculture.* World Health Organization. Copenhagen, Denmark. May 2002. p. 27.
[114] H.T.Shacklette and J.G. Boerngen *Element Concentrations in Soils and other Surficial Materials of the United States (USGS PP 1270).* U.S. Geological Survey. Washington D.C. 1984. p.4.
[115] A.C. Chang, et al. *Developing Human Health-related Chemical Guidelines for Reclaimed Water and Sewage Sludge Applications in Agriculture.* World Health Organization. Copenhagen, Denmark. May 2002. pp. iv and 71.

European Union. The most stringent limit purportedly identified by the authors of the WHO report is a total deposition threshold of 0.6 kg/ha, purportedly established by the government of Canada. [116] However, as discussed below, this does not reflect the limit actually in effect in Canada. The second most stringent limit identified by the authors of the WHO report is a total deposition threshold of 0.8 kg/ha, established by the governments of Denmark and Sweden. [117] This limit is approximately 20 percent higher than the maximum deposition expected from the HEC over a 100-year period.

In Canada, the maximum acceptable level for cumulative mercury additions to soil is 1 kg/ha. [118, 119] This standard, which was initially adopted in 1979 and most recently reaffirmed in 1997, is intended to protect against risk to humans, plants, and animals. [120] The Canadian standard is approximately 50 percent higher than the maximum deposition expected from the HEC over a 100-year period.

In 1997, the U.S. Department of Energy instituted a soil concentration screening value of 0.3 ppmw for mercury. [121] This value represents the concentration that the authors consider adequate to ensure that no phytotoxic effects will occur in terrestrial plants grown in soil.

In 1997, the National Park Service (within the U.S. Department of the Interior) reported the following with respect to mercury contamination of soils:

- The maximum acceptable concentration of mercury in soils used for production of food is 2.1 ppmw; [122] and
- Vermont's standard limiting the cumulative application of mercury to soils is 6 kg/ha. [123]

In 1993, in the context of its regulations governing land application of sewage sludge, the U.S. EPA established a maximum cumulative loading limit for mercury of 17 kg/ha. This limit is based on the level that was found to be safe for a child ingesting biosolids, which is the most restrictive of all exposure pathways evaluated. For the "human home gardener" exposure pathway,

---

[116] Ibid. p. 31.
[117] Ibid. p. 31.
[118] *Guidelines to the Fertilizers Act and Regulations, 2nd Ed.* Agriculture and Agri-Food Canada. Nepean, Ontario, Canada. November 1996. p. 3-3.
[119] *Trade Memorandum T-4-93e: Standards for Metals in Fertilizers and Supplements.* Canadian Food Inspection Agency, Plant Products Directorate, Plant Production Division, Fertilizer Section. Nepean, Ontario, Canada. September 1997.
[120] Ibid.
[121] R.A. Efroymson et al. *Toxicological Benchmarks for Screening Contaminants of Potential Concern for Effects on Terrestrial Plants: 1997 Revision.* U.S. Department of Energy, Office of Environmental Management. Oak Ridge, TN. 1997. p. 2-5.
[122] R.J. Irwin et al. *Environmental Contaminants Encyclopedia – Mercury Entry.* U.S. Department of Energy, National Park Service, Water Resources Division, Water Operations Branch. Fort Collins, CO. July 1997. p. 47.
[123] Ibid. p. 43.

assuming a lifetime of eating vegetables grown in mercury-contaminated soil, U.S. EPA determined that the maximum cumulative loading limit would be 370 kg/ha. A loading limit based on phytotoxicity was not determined. [124]

An Indian study published in 1992 found that barley plants exhibited no phytotoxic effects when grown with a mercury concentration of 34.9 ppmw, but did exhibit phytotoxic effects at a nickel concentration of 64.0 ppmw. [125]

In summary, the scientific literature identified during this review indicates that the HEC's mercury emissions will not have an unacceptable, adverse impact on agricultural crops grown near the HEC site or an unacceptable risk of human health effects due to mercury uptake by agricultural crops. Thus, ERM has concluded that the maximum predicted mercury deposition rate will not lead to soil concentrations that are identified in the literature as being harmful to crops or to people that consume affected crops.

3.14 *NICKEL*

The maximum predicted deposition rate of nickel is 2,951 mg /ha·yr, the maximum 100-year deposition is 295,100 mg /ha, and the maximum 100-year increase in soil concentration is 0.368 ppmw. The concentration value is below the minimum U.S. EPA screening value of 500 ppmw. [126] There are no NAAQS for nickel.

ERM reviewed literature to ascertain whether there exists any basis for concluding that the HEC's emissions of nickel will have an unacceptable phytotoxic impact on agricultural crops grown near the HEC site or an unacceptable risk of human health effects due to nickel uptake by agricultural crops. A summary of findings follows.

Naturally occurring nickel concentrations in soils are generally in the range of 0.2 ppmw to 500 ppmw, with a typical concentration of 21 ppmw. [127, 128]

---

[124] *A Guide to the Biosolids Risk Assessments for the EPA Part 503 Rule* (EPA-832/B-93-005). U.S. EPA, Office of Water Management. Washington, DC. September 1995. pp. 82-99.
[125] Panda, K. K., M. Lenka, and B. B. Panda. 1992. Monitoring and assessment of mercury pollution in the vicinity of a chlorakali plant. II. Plant-availability, tissue-concentration and genotoxicity of mercury from agricultural soil contaminated with solid waste assessed in barley (*Hordeum vulgare* L.). *Environ. Pollut.* 76:33-42.
[126] A.E. Smith and J.B. Levenson. *A Screening Procedure for the Impacts of Air Pollution Sources on Plants, Soils, and Animals (EPA-450/2-81-078).* U.S. EPA, Office of Air Quality Planning and Standards. Research Triangle Park, NC. December 1980. p. 17.
[127] A.C. Chang, et al. *Developing Human Health-related Chemical Guidelines for Reclaimed Water and Sewage Sludge Applications in Agriculture.* World Health Organization. Copenhagen, Denmark. May 2002. p. 27.
[128] A.P. Vanselow. "Nickel." In *Diagnostic Criteria for Plants and Soils. University of California, Division of Agricultural Sciences*. H.D. Chapman, ed. Riverside, CA. 1966. p. 303.

In 2002, the WHO adopted a maximum soil concentration screening value of 107.26 ppmw for nickel. [129] In establishing this value, the organization identified guideline values established by eleven different governments, including the U.S. and the European Union. The most stringent limit is a total deposition threshold of 20 kg/ha, established by the governments of Spain and Norway. [130] This limit is more than 6,000 times the maximum deposition expected from the refinery over a 100-year period.

In Canada, the maximum acceptable level for cumulative nickel additions to soil is 36 kg/ha. [131] This standard, which was initially adopted in 1979 and was most recently reaffirmed in 1997, is intended to protect against risk to humans, plants, and animals. [132] The Canadian standard is more than four orders of magnitude times the maximum deposition expected from the refinery over a 100-year period.

In 1997, the U.S. Department of Energy instituted a soil concentration screening value of 30 ppmw for nickel. [133] This value is primarily based on phytotoxicity of barley [134] and represents the concentration that the authors consider adequate to ensure that no phytotoxic effects will occur in terrestrial plants grown in soil.

In 1993, in the context of its regulations governing land application of sewage sludge, the U.S. EPA established a maximum cumulative loading limit for nickel of 420 kg/ha. This limit is based on the level that was found to be adequate for avoiding phytotoxic effects, which is the most restrictive of all exposure pathways evaluated. For the "human home gardener" exposure pathway, assuming a lifetime of eating vegetables grown in nickel-contaminated soil, U.S. EPA determined that the maximum cumulative loading limit would be 10,000 kg/ha. [135]

A Californian study published in 1977 found that corn plants exhibited no phytotoxic effects when grown in loam soil (pH 6.0) with a nickel concentration as high as 100 ppmw, but did exhibit decreased shoot weight when grown in a nickel concentration of 250 ppmw. In loam soil (pH 6.3), the yield of lettuce

---

[129] A.C. Chang, et al. *Developing Human Health-related Chemical Guidelines for Reclaimed Water and Sewage Sludge Applications in Agriculture.* World Health Organization. Copenhagen, Denmark. May 2002. pp. iv and 71.
[130] Ibid. p. 31.
[131] *Guidelines to the Fertilizers Act and Regulations, 2nd Ed.* Agriculture and Agri-Food Canada. Nepean, Ontario, Canada. November 1996. p. 3-3.
[132] Ibid.
[133] R.A. Efroymson et al. *Toxicological Benchmarks for Screening Contaminants of Potential Concern for Effects on Terrestrial Plants: 1997 Revision.* U.S. Department of Energy, Office of Environmental Management. Oak Ridge, TN. 1997. p. 2-5.
[134] Ibid. pp. 3-24 through 3-25.
[135] *A Guide to the Biosolids Risk Assessments for the EPA Part 503 Rule* (EPA-832/B-93-005). U.S. EPA, Office of Water Management. Washington, DC. September 1995. pp. 82-99.

plants decreased at a nickel concentration of 30 ppmw, which was the lowest nickel addition rate evaluated. [136]

An American study published in 1978 found that wheat plants exhibited no phytotoxic effects when grown in acid soil (fine sandy loam, pH 5.7) with a nickel concentration as high as 40 ppmw, but did exhibit phytotoxic effects at a nickel concentration of 80 ppmw or higher. In calcareous soil (silt loam, pH 7.5), the wheat plants exhibited no phytotoxic effects up to a nickel concentration of 160 ppmw, but did exhibit phytotoxic effects at a nickel concentration of 320 ppmw or higher. [137]

Another study published in 1969 determined that while oats plants exhibited phytotoxic effects when grown in a nickel concentration of 100 ppmw, oat plants did not exhibit phytotoxic effects when grown in 50 ppmw. [138]

In summary, the scientific literature identified during this review indicates that the HEC's nickel emissions will not have an unacceptable, adverse impact on agricultural crops grown near the HEC site or an unacceptable risk of human health effects due to nickel uptake by agricultural crops. Thus, ERM has concluded that the maximum predicted nickel deposition rate will not lead to soil concentrations that are identified in the literature as being harmful to crops or to people that consume these crops.

3.15 SELENIUM

The maximum predicted deposition rate of selenium is 391 mg/ha·yr, the maximum 100-year deposition is 39,100 mg /ha, and the maximum 100-year increase in soil concentration 0.049 ppmw. The concentration value is below the minimum U.S. EPA screening value of 500 ppmw. [139] There are no NAAQS for selenium.

ERM reviewed literature to ascertain whether there exists any basis for concluding that the HEC's emissions of selenium will have an unacceptable phytotoxic impact on agricultural crops grown near the refinery site or an unacceptable risk of human health effects due to selenium uptake by agricultural crops. A summary of findings follows.

---

[136] Wallace, A., R. M. Romney, J. W. Cha, S. M. Soufi, and F. M. Chaudhry. 1977d. Nickel phytotoxicity in relationship to soil pH manipulation and chelating agents. *Commun. Soil Sci. Plant Anal.* 8(9):757-64.

[137] G.A. Mitchell et al. "Yield and Metal Composition of Lettuce and Wheat Grown on Soils Amended with Sewage Sludge Enriched with Cadmium, Copper, Nickel, and Zinc." *Journal of Environmental Quality.* Volume 7. 1978. pp. 165-171.

[138] Halstead, R. L., B. J. Finn, and A. J. MacLean. 1969. Extractability of nickel added to soils and its concentration in plants. *Can. J. Soil Sci.* 49:335-342.

[139] A.E. Smith and J.B. Levenson. *A Screening Procedure for the Impacts of Air Pollution Sources on Plants, Soils, and Animals (EPA-450/2-81-078).* U.S. EPA, Office of Air Quality Planning and Standards. Research Triangle Park, NC. December 1980. p. 17.

Naturally occurring selenium concentrations in soils are generally in the range 0.05 ppmw to 6 ppmw, with a typical concentration of 0.3 ppmw. [140, 141]

In 2002, the WHO adopted a maximum soil concentration screening value of 6.16 ppmw for selenium. [142]

In Canada, the maximum acceptable level for cumulative selenium additions to soil is 2.8 kg/ha. [143] This standard, which was initially adopted in 1979 and was most recently reaffirmed in 1997, is intended to protect against risk to humans, plants, and animals. [144] The Canadian standard is approximately 50 percent higher than the maximum deposition expected from the refinery over a 100-year period.

In 1997, the U.S. Department of Energy instituted a soil concentration screening value of 1 ppmw for selenium. [145] This value is primarily based on phytotoxicity of sorghum plants [146] and represents the concentration that the authors consider adequate to ensure that no phytotoxic effects will occur in terrestrial plants grown in soil.

In 1993, in the context of its regulations governing land application of sewage sludge, the U.S. EPA established a maximum cumulative loading limit for selenium of 100 kg/ha. This limit is based on the level that was found to be safe for a child ingesting biosolids, which is the most restrictive of all exposure pathways evaluated. For the "human home gardener" exposure pathway, assuming a lifetime of eating vegetables grown in selenium-contaminated soil, and for the "human eating animals fed crops grown on selenium-contaminated soils" exposure pathway, assuming a lifetime of eating potentially selenium-contaminated meat, U.S. EPA determined that the maximum cumulative loading limits would be 1,200 kg/ha and 15,000 kg/ha, respectively. A loading limit based on phytotoxicity was not determined. [147]

---

[140] A.C. Chang, et al. *Developing Human Health-related Chemical Guidelines for Reclaimed Water and Sewage Sludge Applications in Agriculture.* World Health Organization. Copenhagen, Denmark. May 2002. p. 27.
[141] T.J. Ganje. "Selenium." In *Diagnostic Criteria for Plants and Soils. University of California, Division of Agricultural Sciences*. H.D. Chapman, ed. Riverside, CA. 1966. p. 400.
[142] A.C. Chang, et al. *Developing Human Health-related Chemical Guidelines for Reclaimed Water and Sewage Sludge Applications in Agriculture.* World Health Organization. Copenhagen, Denmark. May 2002. pp. iv and 71.
[143] *Guidelines to the Fertilizers Act and Regulations, 2nd Ed.* Agriculture and Agri-Food Canada. Nepean, Ontario, Canada. November 1996. p. 3-3.
[144] Ibid.
[145] R.A. Efroymson et al. *Toxicological Benchmarks for Screening Contaminants of Potential Concern for Effects on Terrestrial Plants: 1997 Revision.* U.S. Department of Energy, Office of Environmental Management. Oak Ridge, TN. 1997. p. 2-5.
[146] Ibid. p. 3-26.
[147] *A Guide to the Biosolids Risk Assessments for the EPA Part 503 Rule* (EPA-832/B-93-005). U.S. EPA, Office of Water Management. Washington, DC. September 1995. pp. 82-99.

In 1997, the National Park Service (within the U.S. Department of the Interior) reported that no adverse human health effects are expected for humans, including children, residing adjacent to soil containing selenium at a concentration of 10 ppmw. [148]

A study performed in India and published in 1978 found that yield of wheat plants was adversely affected when grown in soil with a selenium concentration as low as 2.5 ppmw. [149]

A study published in 1934 found that wheat plants exhibit symptoms of phytotoxicity when grown in soil with a selenium concentration of 30 ppmw and above. [150]

In summary, the scientific literature identified during this review indicates that the HEC's selenium emissions will not have an unacceptable, adverse impact on agricultural crops grown near the HEC site or an unacceptable risk of human health effects due to selenium uptake by agricultural crops. Therefore, ERM has concluded that the maximum predicted selenium deposition rate will not lead to soil concentrations that are identified in the literature as being harmful to crops or to people that consume affected crops.

3.16 STRONTIUM

The maximum predicted deposition rate of strontium is 52 mg/ha·yr, the maximum 100-year deposition is 5,200 mg/ha, and the maximum 100-year increase in soil concentration is 0.007 ppmw. There are no NAAQS or U.S. EPA screening values for strontium.

ERM reviewed literature to ascertain whether there exists any basis for concluding that the HEC's emissions of strontium will have an unacceptable phytotoxic impact on agricultural crops grown near the HEC site or an unacceptable risk of human health effects due to silver uptake by agricultural crops. A summary of findings follows.

Naturally occurring strontium concentrations in soils are generally in the range of less than 5 ppmw to 3,000 ppmw, with a typical concentration of 240 ppmw.[151]

---

[148] R.J. Irwin et al. *Environmental Contaminants Encyclopedia – Selenium Entry.* U.S. Department of Energy, National Park Service, Water Resources Division, Water Operations Branch. Fort Collins, CO. July 1997. pp. 51-52.
[149] M. Singh and N. Singh. "Selenium Toxicity in Plants and its Detoxification by Phosphorus." *Soil Science.* Volume 126. 1978. pp. 255-262.
[150] T.J. Ganje. "Selenium." In *Diagnostic Criteria for Plants and Soils. University of California, Division of Agricultural Sciences.* H.D. Chapman, ed. Riverside, CA. 1966. p. 401.
[151] H.T.Shacklette and J.G. Boerngen *Element Concentrations in Soils and other Surficial Materials of the United States (USGS PP 1270).* U.S. Geological Survey. Washington D.C. 1984. p.4.

Nothing in the scientific literature reviewed identified phytotoxic affects any of the crops detailed in section 2.1 of this report to exposure to strontium in the soils.

In summary, the scientific literature identified during this review indicates that the HEC's strontium emissions will not have an unacceptable, adverse impact on agricultural crops grown near the HEC site or an unacceptable risk of human health effects due to silver uptake by agricultural crops. Thus, ERM has concluded that the maximum predicted strontium deposition rate will not lead to soil concentrations that are identified in the literature as being harmful to crops or to people that consume affected crops.

3.17 ZINC

The maximum predicted deposition rate of zinc is 16,430 mg/ha·yr, the maximum 100-year deposition is 1.64 x 10^6 mg /ha, and the maximum 100-year increase in soil concentration is 2.05 ppmw. There are no NAAQS or U.S. EPA screening values for zinc.

ERM reviewed literature to ascertain whether there exists any basis for concluding that the HEC's emissions of zinc will have an unacceptable phytotoxic impact on agricultural crops grown near the HEC site or an unacceptable risk of human health effects due to zinc uptake by agricultural crops. A summary of findings follows.

Naturally occurring zinc concentrations in soils are generally in the range of less than 5 ppmw to 2,900 ppmw, with a typical concentration of 60 ppmw.[152]

In 1997, the U.S. Department of Energy instituted a soil concentration screening value of 50 ppmw for zinc. [153] This value represents the concentration that the authors consider adequate to ensure that no phytotoxic effects will occur in terrestrial plants grown in soil.

A study published in 1979 found that soybean plants grown in zinc concentrations of 131 ppmw and greater exhibited phytotoxic effects, in the form of reduced leaf weight. [154]

---

[152] H.T.Shacklette and J.G. Boerngen *Element Concentrations in Soils and other Surficial Materials of the United States (USGS PP 1270).* U.S. Geological Survey. Washington D.C. 1984. p.4.

[153] R.A. Efroymson et al. *Toxicological Benchmarks for Screening Contaminants of Potential Concern for Effects on Terrestrial Plants: 1997 Revision.* U.S. Department of Energy, Office of Environmental Management. Oak Ridge, TN. 1997. p. 2-5.

[154] White, M. C., R. L. Chaney, and A. M. Decker. 1979. Differential cultivar tolerance in soybean to phytotoxic levels of soil Zn. II. Range of Zn additions and the uptake and translocation of Zn, Mn, Fe, and P. *Agronomy J.* 71:126-131.

An American study published in 1991 found that while soybean plants grown in zinc concentrations of 25 ppmw experienced phytotoxicity, no phytotoxic affects were seen on soybean plants grown in a zinc concentration of 10 ppmw. [155]

In summary, the scientific literature identified during this review indicates that the HEC's zinc emissions will not have an unacceptable, adverse impact on agricultural crops grown near the HEC site or an unacceptable risk of human health effects due to zinc uptake by agricultural crops. Thus, ERM has concluded that the maximum predicted zinc deposition rate will not lead to soil concentrations that are identified in the literature as being harmful to crops or to people that consume affected crops.

[155] Aery, N. C. and S. Sakar. 1991. Studies on the effect of heavy metal stress on growth parameters of soybean. *J. Environ. Biol.* 12(1):15-24.

4.0 *SUMMARY AND CONCLUSIONS*

Based on the effects analysis described herein, ERM has concluded that the HEC's emissions would not be expected to result in adverse effects to soils or crops in the vicinity of the project site. For each pollutant of concern, the predicted ambient concentration or the predicted deposition rate is well below the secondary NAAQS and the minimum screening values established by U.S. EPA, as established previously. Nothing in the scientific literature identified during this review indicates that the secondary NAAQS and the minimum U.S. EPA screening values are not protective of any identified crops and, where no secondary NAAQS or screening values have been established, the predicted ambient concentration or the predicted deposition rate is less than the screening values established by other governmental authorities.

The results of this review are summarized in Table 4-1 and Table 4-2.

Tables

October 1, 2007
Project No. 0062074

Environmental Resources Management
15810 Park Ten Place, Suite 300
Houston, Texas 77084-5140
(281) 600-1000

TABLE 4-1

Summary of Review for Gaseous Pollutants
(all values µg/m³)

	SO_2	NO_X	NH_3
Modeled Concentration	4.88, annual 51.4, 24-hr 129, 3-hr	2.94, annual	0.53, annual
Concern levels:			
NAAQS	1,300, 3-hr 78, annual	100, annual	n/a
EPA Screening Value	786, 3-hr 18, annual	94, annual	n/a
Foreign Guidelines	30, season	75, daily 30, annual	270, daily 8, annual
Scientific Literature	27, season	150, monthly	600, 16 days

TABLE 4-2

Summary of Supplemental Review for Trace Metals

(all values ppmw unless otherwise specified)

	As	Sb	Cd	Cr	Co	Cu	F	Pb	Mn	Hg	Ni	Se	Sr	Zn
HEC 100-year increase	0.098	0.060	0.048	0.127	0.028	0.290	0.011	0.201	0.283	0.026	0.368	0.049	0.007	2.05
Concern levels:														
EPA Screening Value	3	n/a	2.5	8.4	n/a	40	400	1,000	2.5	455	500	500	n/a	n/a
Foreign Guidelines	8.14	35.70	3.92	n/a	n/a	n/a	635.11	83.9	n/a	7.41	107.26	6.16	n/a	n/a
U.S. D.O.E. Value	10	5	4	1	20	100	200	50	500	0.3	30	1	n/a	50
Scientific Literature	2.0	ND	4	0.35	2	15	ND	20	500	2.1	80	2.5	ND	25

ND = Not Determined

Appendix G

Growth Analysis

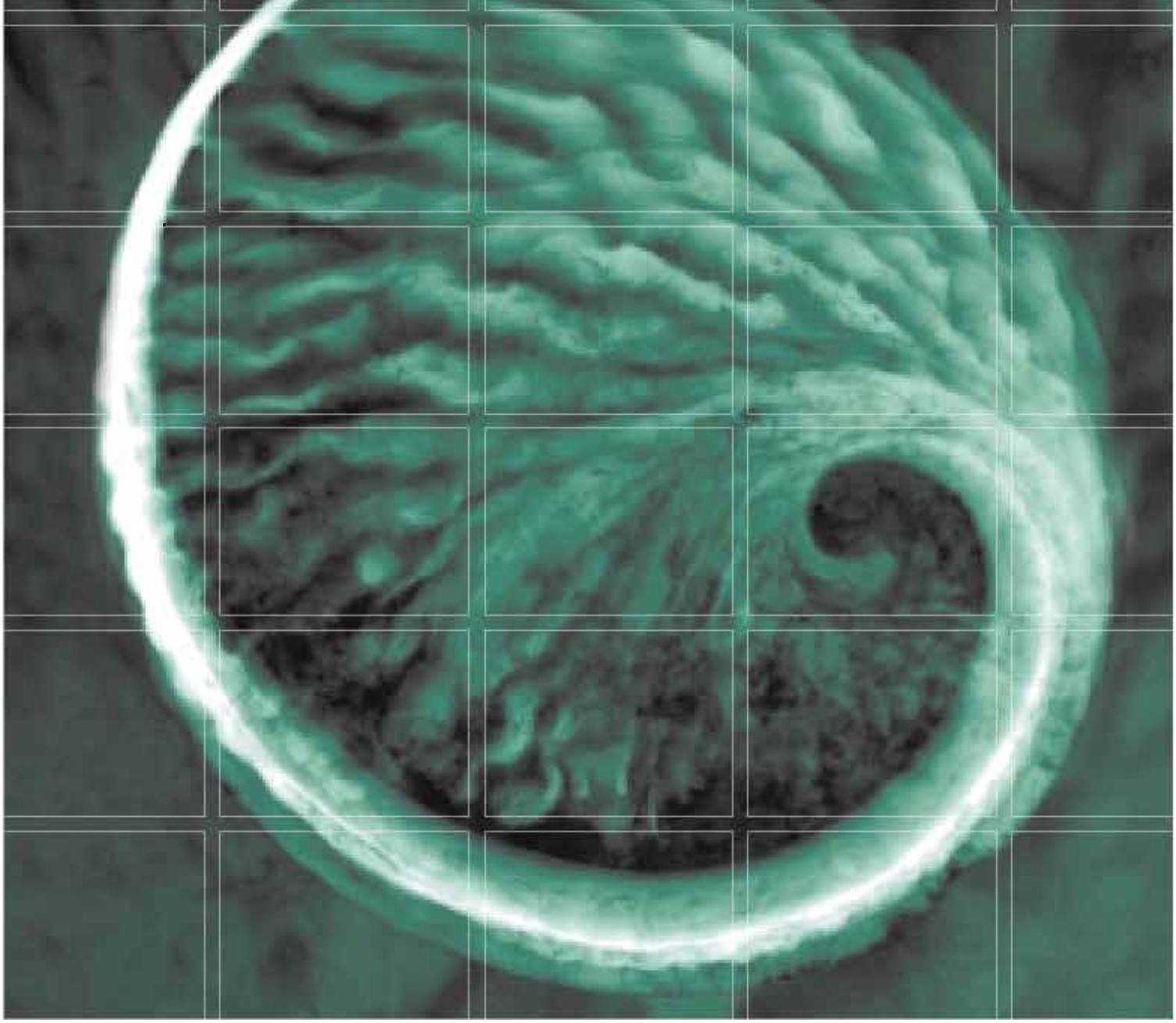

Growth Analysis

Hyperion Energy Center
Union County, South Dakota

October 2, 2007

www.erm.com

Delivering sustainable solutions in a more competitive world

ERM

Hyperion Energy Center

Growth Analysis

October 2, 2007

Project No. 0062074
Union County, South Dakota

Todd H. Hall, P.E.
Partner-in-Charge

Tanya J. Martin
Project Manager

Environmental Resources Management
15810 Park Ten Place, Suite 300
Houston, Texas 77084-5140
T: 281-600-1000
F: 281-600-1001

TABLE OF CONTENTS

1.0	*INTRODUCTION*	*1*
2.0	*METHODOLOGY*	*2*
	2.1 STEP 1: ESTIMATE HOW MANY OPERATIONS-PHASE HEC WORKERS WILL COME FROM "OUTSIDE OF THE PROJECT REGION"	*2*
	2.2 STEP 2: ESTIMATE HOW MANY OTHER WORKERS WILL COME FROM "OUTSIDE OF THE PROJECT REGION" AS AN INDIRECT RESULT OF HEC OPERATIONS	*2*
	2.3 STEP 3: ESTIMATE TOTAL INCREASE IN POPULATION IN PROJECT REGION AS A RESULT OF HEC OPERATIONS	*3*
3.0	*RESULTS*	*4*
4.0	*CONCLUSION*	*7*

1.0 *INTRODUCTION*

Environmental Resources Management (ERM) has prepared this document to summarize the methodology and results of a growth analysis for the proposed Hyperion Energy Center (HEC) to be constructed in Union County, South Dakota. Pursuant to South Dakota Administrative Rule (A.R.S.D.) § 74:36:09 and 40 CFR § 52.21(o), an analysis of the air quality impacts associated with general residential and commercial growth associated with a new major stationary source must be conducted before a Prevention of Significant Deterioration (PSD) permit can be issued for the project.

ERM performed this growth analysis in support of the required impacts analysis. The objective of the growth analysis was to estimate the additional population that would be expected to take residence in the vicinity of the proposed HEC site, as a direct result of the HEC. The growth analysis focused on the operational phase of the HEC.

The remainder of this document is organized as follows:

- *Section 2* describes the methodologies utilized for estimating the influx of workers, the anticipated areas in which the workers will take residence, and the total estimated increase in population in the HEC site vicinity;
- *Section 3* discusses the results of the growth analysis; and
- *Section 4* presents a summary of conclusions for the growth analysis.

2.0 *METHODOLOGY*

ERM utilized a three-step methodology to estimate the population growth as a result of the HEC operations:

- *Step 1* - Estimate the influx of operations-phase HEC workers from outside of the Project Region;
- *Step 2* – Estimate the influx of other workers who will move to the Project Region as an indirect result of the HEC operations; and
- *Step 3* – Estimate the total estimated increase in population in the Project Region as a result of the HEC operations.

2.1 *STEP 1: ESTIMATE HOW MANY OPERATIONS-PHASE HEC WORKERS WILL COME FROM "OUTSIDE OF THE PROJECT REGION"*

For this step, ERM defined the "Project Region" as the area within an approximately one hour drive of the proposed HEC site. Based on conceptual project planning conducted to date, the estimated operations phase workforce for the HEC comprises 1,826 direct workers.

To estimate how many of these 1,826 workers would be expected to come from outside of the Project Region, ERM considered the following:

- The degree of specialized experience required for the various job categories;
- The number of individuals currently residing within the Project Region; and
- The anticipated number of individuals currently in the Project Region with the required skills to serve in the various job categories.

2.2 *STEP 2: ESTIMATE HOW MANY OTHER WORKERS WILL COME FROM "OUTSIDE OF THE PROJECT REGION" AS AN INDIRECT RESULT OF HEC OPERATIONS*

For this step, ERM considered the results of a preliminary economic impact analysis completed for the HEC by Stuefen Research, LLC (Stuefen Research). In addition to the 1,826 "direct" jobs that would be created by the HEC operations, Stuefen Research's analysis predicts 14,147 "indirect" and "induced" jobs that would be created as a result of the HEC operations. "Indirect" jobs are jobs created in industries that will support the HEC. "Induced" jobs are jobs created by the additional demand throughout the Project Region's economy (as a result of the HEC).

As with Step 1, ERM estimated how many of these 14,147 workers would be expected to come from outside of the Project Region.

2.3 *STEP 3: ESTIMATE TOTAL INCREASE IN POPULATION IN PROJECT REGION AS A RESULT OF HEC OPERATIONS*

For this step, ERM estimated the total increase in population as a direct result of worker (direct, indirect and induced) influx to the Project Region. For the purpose of estimating the number of persons that would take residence along with the additional workers, ERM utilized the U.S. national average for family size. Additionally, ERM gave consideration to the fact that some of the indirect and induced jobs predicted for the HEC operations phase would be associated with members of the HEC workers' families.

3.0 RESULTS

Figure 3-1 is a map of the geographical area surrounding the proposed HEC site. The blue line denotes the area within an approximately one hour drive from the HEC site (i.e., the Project Region). The Project Region covers some or all of 15 counties across the tri-State Siouxland Region.

FIGURE 3-1: Map of Geographical Area Showing Project Region

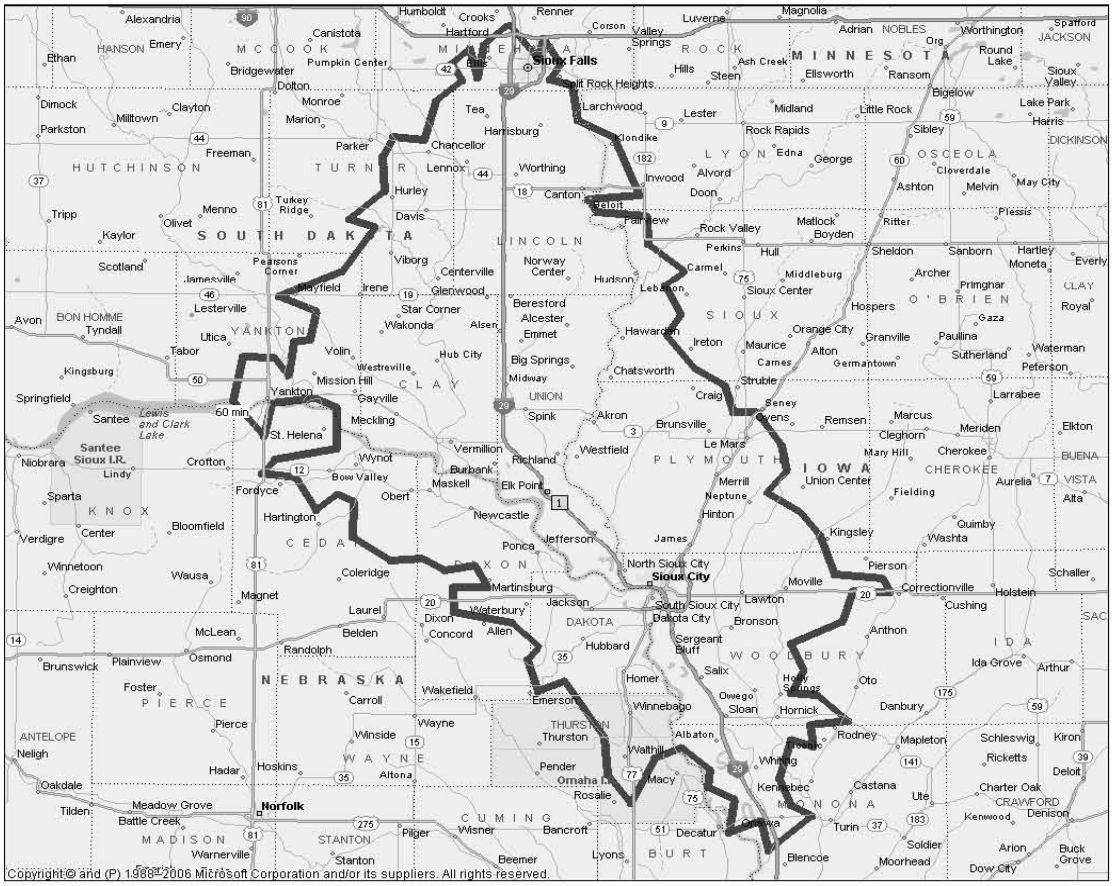

Map Source: Stuefen Research, LLC

Table 3-1 provides a breakdown of the estimate HEC operations phase workforce (by job category). For each category, the table lists the estimated percentage of workers and number of workers that would be anticipated to come from outside of the Project Region.

TABLE 3-1: Number of Workers who will come from Outside Project Region

	Required Operations Workforce	Est. % currently residing within Project Region	Est. No. of workers currently residing within Project Region	Est. % who will relocate to within Project Region	Est. No. of workers who will relocate to Project Region
Operators	545	35%	191	65%	354
Pipefitters/Welders	306	35%	107	65%	199
Pump Mechanics	214	35%	75	65%	139
Utility/Insulators/Other Maintenance Workers	92	35%	32	65%	60
Salaried Operations	83	20%	17	80%	66
Salaried Maintenance	74	20%	15	80%	59
Engineers/Technical	152	10%	15	90%	137
Management and Other Professionals	107	5%	5	95%	102
Administrative (Hourly)	174	50%	87	50%	87
Salaried Administrative	79	42%	33	58%	46
Total	**1,826**	**32%**	**577**	**68%**	**1,249**

The economic modeling conducted by Stuefen Research does not identify the specific types of jobs that will be created through indirect and induced effects. Thus, ERM was not able to make an assessment of the specific skills needed for these jobs, and the anticipated availability of these skills within the population currently residing in the Project Region.

For the purpose of this analysis, ERM assumed that 25% of the 8,617 predicted "indirect" jobs (i.e., jobs related to industries that will support the HEC) would be filled by individuals currently residing in the Project Region. For the 5,530 predicted "induced" jobs (i.e., jobs that are created by the additional demand throughout the Project Region's economy, as a result of the HEC), ERM assumed that 35% would be billed by individuals currently residing in the Project Region.

Based on these assumptions, the following additional workers would be expected to relocate to the Project Region as a result of the HEC operations:

- Indirect jobs – 8,617 jobs x 75% = 6,463 workers; and
- Induced jobs – 5,530 jobs x 65% = 3,595 workers.

ERM estimated the total number of individuals who would relocate to the Project Region by applying the U.S. national average family size of 3.14 individuals per household.[1] Additionally, ERM assumed that 10% of the "indirect" and "induced" jobs for which individuals would relocate to the Project Region would be filled by family members in the same household as other "direct", "indirect" or "induced" workers.

[1] U.S. Census Bureau, 2000.

The total estimated population growth in the Project Region is summarized as follows:

Direct workers from outside Project Region:	1,249	
Indirect workers from outside Project Region:	6,463	
Induced workers from outside Project Region:	3,595	
Subtotal	11,307	(A)
Workers who will share a household with another worker (10%):	1,131	(B) = (A x 0.10)
Total No. of additional households from outside Project Region:	10,176	(C) = (A) - (B)
Total No. of additional individuals from outside of Project Region:	31,954	(C) x 3.14

4.0 CONCLUSION

Based on the analysis described herein, the population in the Project Region would be estimated to grow by approximately 32,000 individuals, as a result of the HEC operations phase (considering direct, indirect and induced employment effects).

Appendix H

Carbon Dioxide Summary

Carbon Dioxide

Refining petroleum, generating electricity, and related activities at the HEC will result in the production of carbon dioxide. The HEC will generate approximately 19 million short tons of CO_2 annually from three primary sources:

1. Petcoke gasification (9.5 million stpy);
2. Turbine exhaust in the power block (4.9 stpy);
3. Refinery heaters (4.6 stpy).

In the HEC, approximately 82% of the carbon entering the facility (primarily in the form of crude oil) leaves with the refined fuel products (primarily gasoline and diesel). The remaining 18% is emitted as CO_2. CO_2 is a result of the combustion processes required to produce the heat, steam, electricity, and hydrogen used by the refinery.

Hyperion recognizes the need to minimize environmental impacts associated with CO_2 emissions. Although CO_2 is not currently regulated under either federal or state laws or regulations, Hyperion is studying various designs for the HEC that would enable it to capture the maximum amount of CO_2 that is economically and technologically feasible. A combination of pre-combustion and post combustion technologies can be employed to capture CO_2. While definitive engineering design and costs estimates have not yet been prepared for CO_2 capture, Hyperion preliminary studies indicate substantial quantities of CO_2 may be captured from the gasification process.

Hyperion is presently designing the IGCC unit to be carbon capture ready. Once captured, CO_2 can be permanently stored or sequestered. Hyperion is currently evaluating various options for the sequestration and storage of CO_2, including geological formations, oceanic storage, and solid storage by reaction of CO_2 with metal oxides to produce stable carbonates. Terrestrial sequestration is also being studied. Hyperion plans to continually assess

these options, as well as other reasonable and feasible carbon storage solutions, as they arise and are more fully developed. In the same manner, Hyperion is studying technologies that would permit the capture of CO_2 from refinery sources. While CO_2 emissions from normal refinery operations (such as refinery furnace stack gases and power turbine exhaust) create significant challenges to capturing CO_2 due to their dilute nature (i.e. low CO_2 concentration), the inclusion of gasification in the HEC design offers a unique opportunity to capture, and possibly sequester, over 9.5 mmtpy of CO_2 in a highly concentrated and pressurized stream. This a capability that HEC will have that no other refinery in the world has.

Hyperion continues to monitor pending legislation and agency activity to assess the potential and timing of CO_2 legislation and regulation. Once the regulations and uncertainties surrounding CO_2 capture and sequestration are addressed and resolved, equipment can be added to HEC's carbon capture ready facility without significantly affecting ongoing operations. If legislation and regulation occurs sufficiently early in the design phase of the HEC, Hyperion will assess the feasibility of implementing CO_2 capture, transportation, and sequestration prior to commencement of operations at the facility.